PASADENA
Unified School District
FACILITIES DEPARTMENT

Altadena Outdoor Learning & Campus Improvements Project
Bid #22-25/26

April 30, 2026

ADDENDUM #1

Pasadena Unified School District Facilities Department
351 S. Hudson Ave.
Pasadena, CA 91109

This addendum consists of the following revisions and or clarifications to the bid documents issued:

- **ADD, DELETE, REVISE & REPLACE** the following sections of the bid with the following:
    - **Refer to LPA's Addendum No. 1 dated March 28, 2026 totaling 98 pages attached herein for the following:**
        - **Changes to Drawings**
        - **Drawings and Documents Issued**
        - **Drawings**

Following are the DISTRICT RESPONSES TO RECEIVED PRE-BID QUESTIONS:

- **Responses are included within LPA's Addendum No. 1 dated March 28, 2026 totaling 98 pages attached herein.**

It is mandatory for all Addendums issued to be acknowledging in the bid submittal documents.

END OF DOCUMENT

March 28, 2026

Addendum No. 1
Regarding the contract documents for ALTADENA ARTS MAGNET ELEMENTARY SCHOOL MODERNIZATION

DSA No. 03-125900

For the PASADENA UNIFIED SCHOOL DISTRICT

LPA Project No.: 33366

NOTICE TO BIDDERS

This addendum forms a part of the contract and modifies the original Bid Set documents dated 03/13/2026. It is intended that all work affected by the following modifications shall conform to related provisions and general conditions of the Contract of the original drawings and specifications. Modify the following items wherever they appear in any drawings or sections of the specifications. Acknowledge receipt of Addendum No. A in the space provided on the Bid Form. Failure to do so may be subject to disqualification.

General Items or Clarifications

Pre Bid RFI Log Responses

Changes to Specifications

None

Changes to Drawings

Item No. 1 G0.10– Sheet List

a. Revised sheet index.

Item No. 2 C0.01– Civil Notes

b. Added four new sheets to sheet index.
c. Revised earth work quantities.

Item No. 3 C1.01– Demolition Plan

d. Expanded the demolition limit at southeast corner of the site to include an existing storm drain catch basin.

Item No. 4 C2.01– Grading Plan

a. Revised construction notes #3, #4, and #15.
b. Revised grading at retaining wall/flush curb north of the proposed basketball court.
c. Added four 5-scale grading enlargement callouts for different parts of the drawing.

Item No. 5 C2.02– Grading Plan

a. Revised construction notes #3, #4, and #15.
b. Re-designed the parking lot grading.
c. Added three 5-scale grading enlargement callouts for different parts of the drawing.

Item No. 6 C2.03– Grading Plan

a. Revised construction notes #3, #4, and #15.
b. Revised layout/grading of the east playground/outdoor learing by existing classroom building and electrical yard.
c. Added three 5-scale grading enlargement callouts for different parts of the drawing.

Item No. 7 C2.04– Grading Plan

a. Revised construction notes #3, #4, and #15.
b. Detailed the grading at the modular wetland at southwest corner.
c. Revised layout/grading of the path and planting area from existing classroom building to the open space.
d. Added two 5-scale grading enlargement callouts for different parts of the drawing.

Item No. 8 C2.05– Grading Enlargement Plan

a. Added new sheet.

Item No. 9 C2.06– Grading Enlargement Plan

a. Added new sheet.

Item No. 10 C2.07– Grading Enlargement Plan

a. Added new sheet.

Item No. 11 C2.08– Grading Enlargement Plan

a. Added new sheet.

Item No. 12 C3.01– Storm Drain & Utility Plan

a. Drinking fountain and all domestic water scope was removed from the project.
b. Re-designed the site storm drain across the site to align with site layout and grading.
c. Revised storm drain construction notes #26, and #28.
d. Added storm drain construction notes #36, and #37.
e. Added fire water construction note #63.

Item No. 13 C3.02– Storm Drain & Utility Enlargements

a. Drinking fountain and all domestic water scope was removed from the project.
b. Re-designed the site storm drain across the site to align with site layout and grading.
c. Revised storm drain construction notes #26, and #28.
d. Added storm drain construction notes #36, and #37.
e. Added fire water construction note #63.

Item No. 14 C5.01 – HORIZONTAL CONTROL, PAVING, STRIPING, AND SIGNAGE PLAN

a. Updated the entire drawing to align with the revised site layout and design.
b. Added paving legend #41 for sand.

Item No. 15 C6.01 – Erosion Control Plan

a. Relocated storm drain inlet protection symbol and callouts across the plan due to storm drain layout changes.
b. Adjusted flow direction symbol across the plan due to grading updates.

Item No. 16 C7.01 – Details

a. Removed flush curb detail on #8.
b. Removed drywell detail on #14.
c. Removed curb opening detail on #15 and replaced with atrium drain at dry creek basin.

Item No. 17 C7.02 – Details

a. Revised all three modular wetland design on detail #1

Item No. 18 L0.01– Landscape Notes and Legends

a. Revised materials keynote legend.
b. Revised site furnishing legend.
c. Revised boulder legend.

Item No. 19 L1.01– Materials Plan

a. Revised materials keynote legend.
b. Revised keynote callouts for design updates.

Item No. 20 L2.01– Layout Plan

a. Revised layout dimensions per design updates.

Item No. 21 L3.01 – Site Materials Enlargement Plan

a. Revised materials keynote legend.
b. Updated amphitheater and circular plaza.
c. Moved light pole locations.
d. Updated paving edge at playground with boat sculptures and sand.

Item No. 22 L4.01 – Site Sections and Elevations

a. Revised section with updated mounting.
b. Labeled the Clearing plaza as OFOI.

Item No. 23 L4.03 – Site Sections and Elevations

a. Added dry creek cascade section.
b. Added embankment slide section.
c. Added boulder to slide section.

Item No. 24 L5.01– Construction Details

a. Added DG & cobble /PA: 9” min. to detail 09 concrete flush curb detail
b. Changed detail 11 for only rock mulch and in lieu sand.
c. Added detail 18 steppingstone.
d. Added detail 19 sand
e. Added detail 20 cobblestone flush curb @ sand

Item No. 25 L5.03 – Construction Details

a. Added detail 04 rube steel automatic vehicular seeing gate-enlargement plan.
b. Revised detail 03 tube steel automatic vehicular swing gate per grading plan updates.
c. Added detail 15 gate operator.
d. Added detail 21 equipment post footing.

Item No. 26 L5.04 – Construction Details

a. Revised detail 02 boulder amphitheater seating detail per grading plan updates.
b. Revised detail 09 wood bridge mortar cobble callout.

Item No. 27 L5.05 – Construction Details
a. Removed detail 09 drinking fountain.
b. Added detail 17 dry creek basin.
c. Added detail 18 dry creek cascade.

Item No. 28 L5.06 – Construction Details
a. Added detail 01 running track striping.
b. Added detail 02 kickball striping.
c. Added detail 03 hopscotch striping.
d. Added detail 04 butterfly striping.

Item No. 29 L6.01 – Irrigation Plan
a. Revised Irrigation to reflect planting and tree updates.

Item No. 30 L6.02 – Irrigation Legend & Notes
a. Revised irrigation material legend.
b. Revised water efficient landscape worksheet.
c. Revised irrigation controller run times.

Item No. 31 L6.03 – Irrigation Details
a. Added detail O large turf pop-up rotor head.

Item No. 32 L7.01 – Planting Plan
a. Revised planting to reflect design updates.
b. Revised planting legend.
c. Added # 16 scope plan.

Item No. 33 L8.01 – Striping Plan
a. Revised striping legend.

Item No. 34 E100– Site Plan - Electrical
a. Added electrical route to automative swing gate at parking lots.
b. Added electrical route to irrigation controller.
c. Added electrical route to power pedestals at outdoor learning.

Item No. 35 E0.30 – Site Lighting Fixture Schedule & Details
a. Revised lighting fixture schedule.

Item No. 36 E1.11– Lighting Site Plan
a. Moved event light poles at amphitheater.
b. Moved parking lot light pole adjacent to existing ramp.
c. Moved light pole at outdoor learning.
d. Moved light pole at basketball court.

Item No. 37 E6.01– Lighting Photometric Site Plan
a. Updated photometric site plan per design updates.

Item No. 38 E9.14– Lighting Site Aiming Diagram and Configuration
a. Updated lighting site aiming diagram per design updates.
b. Updated event pole mounting configurations and plan.

Drawings and Documents Issued

The following drawings and documents are issued as Addendum No. 1 and are to be included in the Contract Documents.

Drawings

G0.10,C0.01, C0.02, C1.01, C2.01, C2.02, C2.03, C2.04, C2.05, C2.06, C2.07, C2.08, C3.01, C3.02, C5.01, C6.01, C7.01, C7.02, L0.01, L1.01, L2.01, L3.01, L4.01, L4.02, L4.03, L5.01, L5.02, L5.03, L5.04, L5.05, L5.06, L6.01, L6.02, L6.03, L7.01, L7.02, L8.01, PE1.01, E0.01, E0.20, E0.30, E1.11, E6.01, E9.14, E000, E001, E100, E200, E201, E202, E300, E301, E400, E401, E402, E403, E404, E405

End of Addendum No. 1

Altadena Arts Magnet Pre Bid RFI Log

RFI	RFI Question	Response Date	RFI Response
1	Please confirm that a bid extension from Thursday, May 7, 2026, at 2PM to Tuesday, May 19, 2026, at 2PM would be acceptable.	4/30/2026	Bid date will not be moved. Bid date remains as per bidding documents.
2	Please confirm that the bidder must be prequalified with PUSD at the time of bid submission deadline – and please confirm aprequalification amount (aka "Approved For" amount on the PUSD Approved Contractor List), if any, that must be met for the project.	4/30/2026	Yes, prequalification is required in accordance with bidding documents. A minimum prequalifiation amount is not required unless the bidding documents set a minimum amount.
3	Please confirm that the 153 calendar days marked for duration of the project is from notice to proceed through anticipated final completion date – and not the anticipated substantial completion date.	4/30/2026	PUSD CPM confirms bid period to remain as closing on 5/7, however overall project completion date moved to 11/27/2026.
4	Confirm that owner is responsible for procuring and installing all site furnishings per the Site Furnishings Legend in L0.01 with the exception of the drinking fountain.	4/30/2026	All Site Furnishings are to be bid as Contractor Installed.
5	Confirm that contractor is responsible for procuring and installing all playground equipment specified on the Play Equipment Legend in L0.01.	4/30/2026	Play Equipment is to be Owner Furnished and Contractor Installed.
6	Confirm that contractor is responsible for procuring and installing all boulders as specified on the Boulder Legend L0.01.	4/30/2026	Boulders are to be Owner Furnished and Contractor Installed.
7	Confirm that contractor is responsible for procuring and installing all sports equipment as specified on the Sport Equipment Legend in L0.01.	4/30/2026	Sports Equipment to be Contractor Furnished Contractor Installed.
8	Confirm that contractor is responsible for procuring and installing all materials and equipment related to the PV Structure per PV-1, PV-2, and S-1 through S-21.	4/30/2026	Confirmed.
9	Please see the attached proposed "Or-Equal" product substitution in accordance with the below referenced.	4/30/2026	Substitution not reviewed as items are furnished by the Owner.
10	Please provide the list of current Prequalified subcontractors, till we receive the updated list during this bid.	4/30/2026	Project prequalification listing will be issued in accordance with Public Contract Code, 5 Business Days prior to the bid date. For future reference PUSD has a current listing available on their website for reference at: https://www.pusd.us/departments/measure-o/bidding-opportunities
11	Please confirm the bid due date and time	4/30/2026	Thursday, May 7, 2026 no later than 2:00 pm PST
12	Please advise the existing vendors , to use and /or coordinate	4/30/2026	Refer to the contract drawings and specifications
13	Please provide preferred vendors , manufacturer or suppliers - if any - for the specialized works	4/30/2026	Refer to the contract drawings and specifications
14	Please advise the location of the laydown areas and the contractor parking areas	4/30/2026	Contractor to provide logistics plan 10 calendar days from NTP. Campus is currently closed and will not have students/staff activity over the summer. However, the campus is to re-open for the 2026-27 School Year and will be an active site as of 8/10/26.
15	Please advise the potential start date of the construction	4/30/2026	Anticpated NTP is June 8, 2026.

16	Please advise the allowed working hours and time , and if any restrictions should be considered by the Contractor	4/30/2026	Job Site Access Hours Stated in bid documents. Campus is currently closed and will not have students/staff activity over the summer. However, the campus is to re-open for the 2026-27 School Year and will be an active site as of 8/10/26.
17	Please advise if the temprory power is by Contractor or will be provided by Owner	4/30/2026	Contractor responsible to coordinate and install temporary power.
18	Please confirm the Engineer Estimated Amount of the project	4/30/2026	Per the projects legal advertisement and listed on SecureBids the estimate is $6.5M to $8M.
19	Can the GC be able to use site water and electrical services from the existing site?	4/30/2026	Contractor responsible to coordinate and install temporary power and use of on site water source.
20	Is the playground structure to be furnished and install by the GC?	4/30/2026	Refer to the contract drawings.
21	Are there any equipment being furnished by the owner and install by the GC?	4/30/2026	Refer to the contract drawings.
22	Is a job site trailer required for the inspector/architect?	4/30/2026	Job Site trailer for inspector/architect is not required. Contractor trailer is optional. Existing campus space may be available for use during construction until the campus re-opens on 8/10/2026. If space is provided to contractor, contractor is responsible to maintain and clean area before turning it over back to the District.
23	Since there are no structures, is a builder's risk insurance required?	4/30/2026	Refer to bidding documents for the insurance requirements of the bid.
24	Are there any phasing requirements?	4/30/2026	Contractor Phasing Plan: The Contractor shall submit a detailed project schedule and phasing plan within ten (10) calendar days of the Notice to Proceed (NTP). This plan must clearly demonstrate the completion of the Parking Lot and Playground on or before August 10, 2026. Safety and Separation: Upon Beneficial Occupancy of the Parking Lot and Playground on August 10, 2026, the Contractor shall provide and maintain professional-grade construction fencing and barricades to completely segregate remaining construction activities from the occupied areas. The Contractor must ensure safe, unobstructed ADA-compliant paths of travel for students, staff, and the public to and from these areas while work continues toward Final Completion.

ALTADENA ARTS MAGNET SCHOOL

743 E. CALAVERA ST,
ALTADENA CA 91001

Submittals	Date
DSA SUBMITTAL	02/02/2026
DSA SUBMITTAL V2	03/13/2026
ADDENDUM 1	04/28/2026

LPA

ARCHITECTURE ENGINEERING INTERIORS
LANDSCAPE ARCHITECTURE PLANNING

949-261-1001 Office

949-260-1190 Fax

LPADesignStudios.com

5301 California Avenue,
Suite 100
Irvine, California 92617

LICENSED ARCHITECT
NICOLE MEINTS
C30830
9/30/2027
REGISTRATION DATE
STATE OF CALIFORNIA

PROJECT NUMBER 33366

SHEET INDEX

ISSUE DATE	SHEET NUMBER	SHEET NAME
GENERAL		
04/28/2026	G0.00	COVER SHEET
04/28/2026	G0.10	SHEET LIST
04/28/2026	G0.20	GENERAL PROJECT INFORMATION
04/28/2026	G0.31	ACCESSIBILITY DETAILS
04/28/2026	G0.32	ACCESSIBILITY DETAILS
04/28/2026	G1.10	SITE ACCESSIBILITY PLAN
04/28/2026	G1.20	SITE FIRE ACCESS PLAN
7		
CIVIL		
04/28/2026	C0.01	CIVIL NOTES
04/28/2026	C0.02	EXISTING CONDITIONS
04/28/2026	C1.01	DEMOLITION PLAN
04/28/2026	C2.01	GRADING PLAN
04/28/2026	C2.02	GRADING PLAN
04/28/2026	C2.03	GRADING PLAN
04/28/2026	C2.04	GRADING PLAN
04/28/2026	C2.05	GRADING ENLARGEMENT PLAN
04/28/2026	C2.06	GRADING ENLARGEMENT PLAN
04/28/2026	C2.07	GRADING ENLARGEMENT PLAN
04/28/2026	C2.08	GRADING ENLARGEMENT PLAN
04/28/2026	C3.01	STORM DRAIN PLAN
04/28/2026	C3.02	STORM DRAIN ENLARGEMENTS
04/28/2026	C5.01	HORIZONTAL CONTROL, PAVING, STRIPING AND SIGNAGE PLAN
04/28/2026	C6.01	EROSION CONTROL PLAN
04/28/2026	C7.01	DETAILS
04/28/2026	C7.02	DETAILS
17		
LANDSCAPE		
04/28/2026	L0.01	LANDSACPE NOTES AND SCHEDULES
04/28/2026	L1.01	MATERIALS PLAN
04/28/2026	L2.01	LAYOUT PLAN
04/28/2026	L3.01	SITE MATERIALS AND LAYOUT ENLARGEMENT PLAN
04/28/2026	L4.01	SITE SECTIONS AND ELEVATIONS
04/28/2026	L4.02	SITE SECTIONS AND ELEVATIONS
04/28/2026	L4.03	SITE SECTIONS AND ELEVATIONS
04/28/2026	L5.01	CONSTRUCTION DETAILS
04/28/2026	L5.02	CONSTRUCTION DETAILS
04/28/2026	L5.03	CONSTRUCTION DETAILS
04/28/2026	L5.04	CONSTRUCTION DETAILS
04/28/2026	L5.05	CONSTRUCTION DETAILS
04/28/2026	L5.06	CONSTRUCTION DETAILS
04/28/2026	L6.01	IRRIGATION PLANS
04/28/2026	L6.02	IRRIGATION LEGEND AND NOTES
04/28/2026	L6.03	IRRIGATION DETAILS
04/28/2026	L7.01	PLANTING PLAN
04/28/2026	L7.02	PLANTING DETAILS
04/28/2026	L8.01	STRIPING PLAN
04/28/2026	PE1.01	PLAY EQUIPMENT PLAN
20		
ARCHITECTURE		
04/28/2026	A1.01	EXISTING CONDITIONS FLOOR PLAN
04/28/2026	A10.40	SIGNAGE DETAILS
2		
STRUCTURAL		
04/28/2026	S0.01	GENERAL NOTES
04/28/2026	S0.02	GENERAL NOTES
04/28/2026	S1.01	FOUNDATION PLAN
04/28/2026	S1.11	SITE DETAILS
4		
ELECTRICAL		
04/28/2026	E000	ELECTRICAL COVERSHEET
04/28/2026	E001	OUTDOOR TITLE 24
04/28/2026	E100	SITE PLAN - ELECTRICAL
04/28/2026	E200	ELECTRICAL DETAILS
04/28/2026	E201	ELECTRICAL DETAILS
04/28/2026	E202	ELECTRICAL DETAILS
04/28/2026	E300	ELECTRICAL DIAGRAMS & SCHEDULES
04/28/2026	E301	PV SYSTEMS DIAGRAM
04/28/2026	E400	ELECTRICAL SPECIFICATIONS
04/28/2026	E401	ELECTRICAL SPECIFICATIONS
04/28/2026	E402	ELECTRICAL SPECIFICATIONS
04/28/2026	E403	ELECTRICAL SPECIFICATIONS
04/28/2026	E404	ELECTRICAL SPECIFICATIONS
04/28/2026	E405	ELECTRICAL SPECIFICATIONS
14		
LIGHTING		
04/28/2026	E0.01	ELECTRICAL NOTES, SYMBOLS, & ABBREVIATIONS
04/28/2026	E0.20	GENERAL NOTES
04/28/2026	E0.30	SITE LIGHTING FIXTURE SCHEDULE & DETAILS
04/28/2026	E1.11	LIGHTING SITE PLAN
04/28/2026	E6.01	LIGHTING PHOTOMETRIC SITE PLAN
04/28/2026	E9.14	LIGHTING SITE AIMING DIAGRAM AND CONFIGURATION
6		
TECHNOLOGY		
04/28/2026	T000	TECHNOLOGY COVERSHEET
04/28/2026	T200	SITE PLAN - TECHNOLOGY
04/28/2026	T400	TECHNOLOGY DETAILS AND DIAGRAMS
04/28/2026	T500	TECHNOLOGY SCHEDULES
4		
PC PHOTOVOLTAIC STRUCTURE		
04/28/2026	PV-1	COLUMN PLAN
04/28/2026	PV-2	6 PANEL T-STRUCTURE SIMPLE-SPAN SITE SPECIFIC
04/28/2026	S-1	COVER SHEET 1
04/28/2026	S-2	COVER SHEET 2
04/28/2026	S-3	GENERAL NOTES
04/28/2026	S-4	SAMPLE DSA-103 FORMS
04/28/2026	S-5	SECTION PROPERTIES & REBAR DETAILS
04/28/2026	S-6	T-STRUCTURE FRAMING PLAN & ELEVATIONS
04/28/2026	S-7	T-STRUCTURE BEAM/COLUMN SCHEDULE
04/28/2026	S-8	T-STRUCTURE PIER FOUNDATION SCHEDULE
04/28/2026	S-10	T-STRUCTURE BEAM-TO-COLUMN SCHEDULE
04/28/2026	S-16	PURLIN SCHEDULE
04/28/2026	S-17	TYPICAL PURLIN DETAILS
04/28/2026	S-18	TYPICAL SOLAR PANEL DETAILS
04/28/2026	S-19	BEAM BRACING & MISC. DETAILS
04/28/2026	S-20	EQUIPMENT COLUMN CONNECTIONS
04/28/2026	S-21	FOUNDATION MISC.DETAILS
17		
Grand total: 91		

LPA

ARCHITECTURE ENGINEERING INTERIOR DESIGN
LANDSCAPE ARCHITECTURE PLANNING

949-261-1001 Office

LPADesignStudios.com

5301 California Avenue, Suite 100
Irvine, California 92617

LICENSED ARCHITECT
NICOLE MENTZ
C30830
9/30/2027
EXPIRATION DATE
STATE OF CALIFORNIA

This document and all other project documents, ideas, aesthetics and designs incorporated therein are instruments of service. All project documents are copyright protected, are the property of LPA, Inc. (LPA) and cannot be lawfully used in whole or in part for any project or purpose except as set forth in the contractual agreement between LPA and its Client. The unauthorized disclosure and/or use of the project documents (including the creation of derivative works), may give rise to liability for copyright infringement, unlawful disclosure, use or misappropriation of property rights held by LPA. The unauthorized use of the project documents will give rise to the recovery of monetary losses and damages including attorney fees and costs for which the unauthorized user will be held liable.
Project documents describe the design intent of the work and are not a representation of as-built or existing conditions. LPA is not responsible for any discrepancies between the project documents and the existing conditions.

© LPA, Inc.

ALTADENA ARTS MAGNET SCHOOL

743 E. CALAVERA ST,
ALTADENA CA 91001

Developed for
PASADENA UNIFIED SCHOOL DISTRICT

Revision		Date
1	ADDENDUM 1	04/28/2026

Submittal	Date
DSA SUBMITTAL	02/02/2026
DSA SUBMITTAL V2	03/13/2026

Job Number	33366
Checked By	Checker
Scale	

SHEET LIST

G0.10

SYMBOLS

- COLUMN LINES — 0
- SURFACE DRAINAGE ARROW INDICATES DIRECTION OF FLOW
- NORTH ARROW — TRUE NORTH / PROJECT NORTH
- BUILDING SECTION — SECTION ID (1), SHEET NUMBER (A101) TYP
- WALL SECTION — SECTION ID (1), SHEET NUMBER (A101) TYP
- DETAIL CALLOUTS — DETAIL ID (1), SHEET NUMBER (A101) SIM
- DETAIL SECTION — DETAIL ID (1), SHEET NUMBER (A101) SIM
- DETAIL REFERENCE — DETAIL ID (1), SHEET NUMBER (A101) SIM
- INTERIOR ELEVATIONS — DETAIL ID, SHEET NUMBER (A, B, C, D, A101) SIM
- ROOM DESIGNATION — ROOM NUMBER, ROOM AREA (Room 101)
- REVISION CLOUD & TAG (OPTIONAL) — 1
- SHADED PORTION POINTS TO SIDE REFERENCED — MATCH LINE / SEE SHEET A101
- DATUM POINT
- KEYNOTE — ? TYP.
- WALL TYPE — SA2U
- DOOR DESIGNATION — ####
- OPENING DESIGNATION — 1t
- EQUIPMENT TAG — 1i
- FINISH TAG — XX-##
- LEVEL LINE, CONTROL POINT EL: 12'-8" = ELEVATION/SECTION
- STAIR DIRECTION — DN / UP
- CENTER LINES, LEVEL LINES
- HIDDEN CONSTRUCTION FEATURE
- BREAK LINE
- EXTERIOR ASSEMBLY REFER TO A8.11 — R1

ABBREVIATIONS

&	AND
∠	ANGLE
@	AT
℄	CENTERLINE
∅	DIAMETER OR ROUND
#	POUND OR NUMBER
(E)	EXISTING
(P)	PAINT
(R)	REMOVE
+/-	DIM TOLERANCE
AC	ASPHALTIC CONCRETE
ACC	ACCESSIBLE
ACOUS	ACOUSTICAL
ACM	ALUM COMPOSITE MATERIAL
ACT	ACOUS CLG TILE
AD	AREA DRAIN
AED	AUTO EXT DEFIBRILLATOR
ADJ	ADJUSTABLE
AFF	ABOVE FINISH FLOOR
AGGR	AGGREGATE
AHJ	AUTHORITY HAVING JURISDICTION
ALUM	ALUMINUM
APPROX	APPROXIMATE
ARCH	ARCHITECTURAL
ASF	ASSIGNABLE SF
ASPH	ASPHALT
BD	BOARD
BITUM	BITUMINOUS
BLDG	BUILDING
BLK	BLOCK
BLK'G	BLOCKING
BM	BEAM
BOC	BACK OF CURB
BOT	BOTTOM
BO	BOTTOM OF
BOC	BACK OF CURB
BOW	BOTTOM OF WALL
BS	BOTTOM OF SLOPE
CAB	CABINET
CB	CATCH BASIN
CEM	CEMENT
CER	CERAMIC
CI	CAST IRON
CIP	CAST IN PLACE
CIV ENG	CIVIL ENGINEER
CG	CORNER GUARD
CJ	CONTROL JOINT
CLG	CEILING
CLKG	CAULKING
CLO	CLOSET
CLR	CLEAR
CNTR	COUNTER
CO	CASED OPENING
COL	COLUMN
CONC	CONCRETE
CONN	CONNECTION
CONSTR	CONSTRUCTION
CONT	CONTINUOUS
CORR	CORRIDOR
CT	CERAMIC TILE
CTR	CENTER
CTSK	COUNTERSUNK
DA	DISABLED ACCESS
DBL	DOUBLE
DEPT.	DEPARTMENT
DESC	DESCRIPTION
DF	DRINKING FOUNTAIN
DET	DETAIL
DIA	DIAMETER
DIM	DIMENSION
DISP	DISPENSER
DN	DOWN
DO	DOOR OPENING
DR	DOOR
DWR	DRAWER
DS	DOWNSPOUT
DSP	DRY STANDPIPE
DWG	DRAWING
E	EAST
EA	EACH
EJ	EXPANSION JOINT
EL	ELEVATION
ELEC	ELECTRICAL
ELEV	ELEVATOR
EMER	EMERGENCY
ENCL	ENCLOSURE
EP	ELECTRICAL PANELBOARD
EQ	EQUAL
EQUIP	EQUIPMENT
EWC	ELECTRIC WATER COOLER
EXIST	EXISTING
EXPO	EXPOSED
EXP	EXPANSION
EXT	EXTERIOR
FA	FIRE ALARM
FB	FLAT BAR
FD	FLOOR DRAIN
FDN	FOUNDATION
FE	FIRE EXTINGUISHER
FEC	FIRE EXTINGUISHER CABINET
FHC	FIRE HOSE CABINET
FIN	FINISH
FLR	FLOOR
FLASH	FLASHING
FLUOR	FLUORESCENT
FOC	FACE OF CONCRETE
FOF	FACE OF FINISH
FOM	FACE OF MASONRY
FOS	FACE OF STUD
FOV	FACE OF VENEER (BRICK OR PRECAST)
FOW	FACE OF WALL
FR	FIRE RETARDANT
FPRF	FIREPROOF
FS	FINISH SURFACE
FT	FOOT OR FEET
FTG	FOOTING
FURR	FURRING
FUT	FUTURE
GA	GAUGE
GALV	GALVANIZED
GB	GRAB BAR
GC	GENERAL CONTRACTOR
GI	GALVANIZED IRON
GL	GLASS
GND	GROUND
GR	GRADE
GYP	GYPSUM
HB	HOSE BIB
HC	HOLLOW CORE
HDWD	HARDWOOD
HDW	HARDWARE
HM	HOLLOW METAL
HORIZ	HORIZONTAL
HR	HOUR
HGT/HT	HEIGHT

ID	INSIDE DIAMETER
INSUL	INSULATION
INT	INTERIOR
JAN	JANITOR
JT	JOINT
KIT	KITCHEN
LAB	LABORATORY
LAM	LAMINATE
LAND ARCH	LANDSCAPE ARCHITECT
LAV	LAVATORY
LKR	LOCKER
LT	LIGHT
MATL	MATERIAL
MAX	MAXIMUM
MC	MEDICINE CABINET
MECH	MECHANICAL
MEMB	MEMBRANE
MET	METAL
MFR	MANUFACTURER
MH	MANHOLE
MIN	MINIMUM
MIR	MIRROR
MISC	MISCELLANEOUS
MO	MASONRY OPENING
MTD	MOUNTED
MUL	MULLION
N	NORTH
NIC	NOT IN CONTRACT
NO/#	NUMBER
NOM	NOMINAL
NTS	NOT TO SCALE
OA	OVERALL
OA	OUTSIDE AIR
OBS	OBSCURE
OC	ON CENTER
OD	OUTSIDE DIAMETER
OFF	OFFICE
OPNG	OPENING
OPP	OPPOSITE
OSA	OUTSIDE AIR
PA	PLANTING AREA
PRCST	PRECAST
PH	PANIC HARDWARE
PL	PLATE
P LAM	PLASTIC LAMINATE
PLAS	PLASTER
PLYWD	PLYWOOD
POT	PATH OF TRAVEL
PR	PAIR
PT	PAINT
PTD	PAPER TOWEL DISPENSER
PTD/R	COMBINATION PAPER TOWEL DISPENSER & RECEPTACLE
PTN	PARTITION
PTR	PAPER TOWEL RECEPTACLE
QT	QUARRY TILE
R	RISER
RAD	RADIUS
RD	ROOF DRAIN
REF	REFERENCE
REFR	REFRIGERATOR
RGTR	REGISTER
REINF	REINFORCED
REQD	REQUIRED
RESIL	RESILIENT
RM	ROOM
RO	ROUGH OPENING
ROW	RIGHT OF WAY
RWD	REDWOOD
RWL	RAIN WATER LEADER
S	SOUTH
SC	SOLID CORE
SCD	SEAT COVER DISPENSER
SCHED	SCHEDULE
SD	SOAP DISPENSER
SECT	SECTION
SF	SQUARE FEET
SH	SHELF
SHR	SHOWER
SHT	SHEET
SIM	SIMILAR
SND	SANITARY NAPKIN DISPENSER
SNR	SANITARY NAPKIN RECEPTACLE
SPEC	SPECIFICATION(S)
SQ	SQUARE
SS	STAINLESS STEEL
S SK	SERVICE SINK
STA	STATION
STD	STANDARD
STL	STEEL
STOR	STORAGE
STR	STRUCTURAL
SUSP	SUSPENDED
SYM	SYMMETRICAL
T	TREAD
TB	TOWEL BAR
TC	TOP OF CURB
TEL	TELEPHONE
TER	TERRAZZO
T&G	TONGUE & GROOVE
THK	THICK
TOB	TOP OF BEAM
TOC	TOP OF CONCRETE
TOW	TOP OF WALL
TOP	TOP OF PARAPET
TPD	TOILET PAPER DISPENSER
TS	TOP OF SLOPE
TV	TELEVISION
TYP	TYPICAL
UNF	UNFINISHED
UNO	UNLESS NOTED OTHERWISE
UR	URINAL
VCT	VINYL COMPOSITION TILE
VERT	VERTICAL
VEST	VESTIBULE
W	WEST
W/	WITH
WC	WATER CLOSET
WD	WOOD
W/O	WITHOUT
WP	WATERPROOF
WR	WATER RESISTANT
WSCT	WAINSCOT
WT	WEIGHT
WWF	WELDED WIRE FABRIC

ACCESSIBLE CONSTRUCTION SUPPORT FACILITIES

11B-201.4 CONSTRUCTION SUPPORT FACILITIES. These requirements shall apply to temporary or permanent construction support facilities for uses and activities not directly associated with the actual processes of construction, including but not limited to offices, meeting rooms, plan rooms, other administrative or support functions. When provided, toilet and bathing facilities serving construction support facilities shall comply with 11B-213. When toilet and bathing facilities serving construction support facilities are provided by portable units, at least one of each type shall be accessible and connected to the construction support facilities it serves by an accessible route.

EXCEPTION: During construction an accessible route shall not be required between site arrival points or the boundary of the area of construction and the entrance to the construction support facilities if the only means of access between them is a vehicular way not providing pedestrian access.

CALIFORNIA ENERGY CODE SECTION 10-103

The California Energy Code Section 10-103 requires Acceptance Testing on all newly installed lighting controls, mechanical systems, envelopes, and process equipment after installation and before project completion. An Acceptance Test is a functional performance test to help ensure that newly installed equipment is operating and in compliance with the Energy Code.

Lighting controls acceptance tests must be performed by a certified lighting controls Acceptance Test Technician (ATT).

Mechanical system acceptance tests must be performed by a certified mechanical ATT for projects submitted on or after October 1, 2021.

Envelope and process equipment acceptance tests shall be performed by the installing contractor, engineer/architect of record or the owner's agent.

A listing of certified ATT can be found at: https://www.energy.ca.gov/programs-and-topics/programs/acceptance-test-technician-certification-provider-program/acceptance.

The Acceptance Testing procedures must be repeated, and deficiencies must be corrected by the builder or installing contractor until the construction/installation of the specified systems conform and pass the required acceptance criteria.

Project inspectors will collect the forms to confirm that the required Acceptance Tests have been completed.

CONSTRUCTION NOTES

1. ALL CONSTRUCTION & MATERIALS SHALL BE AS SPECIFIED & IN ACCORDANCE WITH ALL APPLICABLE CODES, ORDINANCES, LAWS, PERMITS & THE CONTRACT DOCUMENTS.
2. THE CONTRACTOR SHALL BE RESPONSIBLE FOR THE ACCURATE PLACEMENT OF ALL NEW CONSTRUCTION ON THE SITE.
3. THE CONTRACTOR IS RESPONSIBLE FOR ALL EXG SURVEY MONUMENTS WHICH MAY BE DISTURBED THROUGH CONSTRUCTION ACTIVITIES DEEMED NECESSARY FOR PRESERVATION BY THE CIVIL ENGINEER. IF SUCH MONUMENTS WERE DISTURBED, THE APPLICANT SHALL HAVE A LICENSED LAND SURVEYOR QUALIFIED CIVIL ENGINEER REESTABLISH ANY SUCH MONUMENTATION DAMAGED OR DESTROYED DURING THE CONSTRUCTION OF THE PROJECT & SUBMIT "PRELIMINARY CORNER RECORDS" TO THE CIVIL ENGINEER AFTER REPLACEMENT. AFTER APPROVAL BY THE CIVIL ENGINEER, THE APPLICANT SHALL FILE THE CORNER RECORDS WITH THE COUNTY SURVEYOR. PRIOR TO THE EXONERATION OF ANY SECURITY, EVIDENCE OF SUCH FILING SHALL BE FURNISHED TO THE CIVIL ENGINEER.
4. THE CONTRACTOR IS RESPONSIBLE TO INSURE THAT TRUCK ROUTES SHALL BE STEERED AWAY FROM RESIDENTIAL AREAS.
5. THE CONTRACTOR SHALL ENSURE THAT TRUCKS HAULING DIRT ON PUBLIC ROADS TO & FROM THE SITE SHALL BE COVERED OR WILL MAINTAIN A 6" DIFFERENTIAL BETWEEN THE MAX HGT OF ANY HAULED MATERIAL & THE TOP OF THE HAUL TRAILER. HAUL TRUCK DRIVERS SHALL WATER THE LOAD PRIOR TO LEAVING THE SITE TO PREVENT SOIL LOSS DURING TRANSPORT.
6. THE CONTRACTOR SHALL ENSURE THAT GRADED SURFACES USED FOR OFF ROAD PARKING, MATERIALS LAY-DOWN, OR AWAITING FUTURE CONSTRUCTION SHALL BE STABILIZED FOR DUST CONTROL AS NEEDED. FREQUENTLY ACCESSED UNPAVED AREAS SHALL BE PAVED AS EARLY AS POSSIBLE TO MINIMIZE DIRT TRACKOUT TO PUBLIC RIGHTS-OF-WAY.
7. THE CONSTRACTOR SHALL COORDINATE ANY LANE CLOSURES OR DETOURS WITH THE CITY/COUNTY. FLAG PERSONS & APPROPRIATE TRAFFIC CONTROL DEVICES SHALL BE USED AS NEEDED TO MINIMIZE CONSTRUCTION ACTIVITY INTERFERENCE WITH OFF-SITE-TRAFFIC.
8. THE CONTRACTOR SHALL VERIFY ALL DIMENSIONS & SITE CONDITIONS BEFORE STARTING WORK. SHOULD A DISCREPANCY APPEAR IN THE CONTRACT DOCUMENTS OR BETWEEN THE CONTRACT DOCUMENTS & EXISTING CONDITIONS, NOTIFY THE ARCHITECT AT ONCE FOR INSTRUCTION ON HOW TO PROCEED.
9. SHOULD A CONFLICT OCCUR BETWEEN DWGS & SPECIFICATIONS, THE MORE COSTLY CONDITION SHALL TAKE PRECEDENCE, UNLESS A WRITTEN DECISION FROM THE ARCHITECT HAS BEEN OBTAINED WHICH DESCRIBES A CLARIFICATION OR ALTERNATE METHOD AND/OR MATERIALS.
10. THE CONTRACTOR SHALL CONFINE HIS OPERATION ON THE SITE TO AREAS PERMITTED BY OWNER.
11. THE JOBSITE SHALL BE MAINTAINED IN A CLEAN, ORDERLY CONDITION FREE OF DEBRIS & LITTER & SHALL NOT BE UNREASONABLY ENCUMBERED WITH ANY MATERIALS OR EQUIPMENT. EACH SUBCONTRACTOR IMMEDIATELY UPON COMPLETION OF EACH PHASE OF HIS WORK SHALL REMOVE ALL TRASH & DEBRIS AS A RESULT OF HIS OPERATION.
12. ALL MATERIAL STORED ON THE SITE SHALL BE PROPERLY STACKED & PROTECTED TO PREVENT DAMAGE & DETERIORATION. FAILURE TO PROTECT MATERIALS MAY BE CAUSE FOR REJECTION OF WORK.
13. THE CONTRACTOR SHALL DO ALL CUTTING, FITTING, AND/OR PATCHING OF HIS WORK THAT MAY BE REQ TO MAKE ITS SEVERAL PARTS FIT TOGETHER PROPERLY & SHALL NOT ENDANGER ANY OTHER WORK BY CUTTING, EXCAVATING, OR OTHERWISE ALTERING THE TOTAL WORK OR ANY PART OF IT. ALL PATCHING, REPAIRING AND REPLACING OF MATERIALS AND SURFACES, CUT OR DAMAGED IN EXECUTION OF WORK, SHALL BE DONE WITH APPLICABLE MATERIALS SO THAT SURFACES REPLACED WILL, UPON COMPLETION, MATCH SURROUNDING SIMILAR SURFACES.
14. STRUCTURAL OBSERVATION WILL BE PERFORMED BY THE STRUCTURAL ENGINEER. WHEN REQ, A STATEMENT IN WRITING SHALL BE GIVEN TO THE BUILDING OFFICIAL, STATING THAT THE SITE VISITS HAVE BEEN MADE & WHETHER OR NOT ANY OBSERVED DEFICIENCIES HAVE BEEN CORRECTED TO CONFORM TO THE APPROVED PLANS & SPECIFICATIONS.
15. SUBMITTAL DOCUMENTS FOR DEFERRED SUBMITAL ITEMS SHALL BE SUBMITTED TO THE ARCHITECT OR ENGINEER OF RECORD, WHO SHALL REVIEW THEM & RETURN THEM TO THE CONTRACTOR (WITH A NOTIFICATION INDICATING THAT THE DEFERRED SUBMITTAL DOCUMENTS HAVE BEEN REVIEWED & THAT THEY HAVE BEEN FOUND TO BE IN GENERAL CONFORMANCE WITH THE DESIGN OF THE BUILDING) FOR PLAN CHECK APPROVAL. THE DEFERRED SUBMITTAL ITEMS SHALL NOT BE INSTALLED UNTIL THEIR DESIGN & SUBMITTAL DOCUMENTS HAVE BEEN APPROVED BY THE AUTHORITY HAVING JURISDICTION.
16. PROVIDE ALL ACCESS PANELS AS REQ BY GOVERNING CODES TO ALL CONCEALED SPACES, VOIDS, ATTICS, ETC. VERIFY TYPE REQ WITH ARCHITECT PRIOR TO INSTALLATION.
17. NO PORTION OF WORK REQ A SHOP DWG OR SAMPLE SUBMISSION SHALL BE COMMENCED UNTIL THE SUBMISSION HAS BEEN REVIEWED BY THE ARCHITECT. ALL SUCH PORTIONS OF THE WORK SHALL BE IN ACCORDANCE WITH CORRECTED SHOP DWGS. AND SAMPLES.
18. DIMENSIONS:
    A. ALL DIMS SHALL TAKE PRECEDENCE OVER SCALE.
    B. ALL DIMS ARE TO FACE OF STUD / CONCRETE / MASONRY UNO
    C. CLG HGT DIMS ARE FROM FACE OF SLAB TO FACE OF FIN CLG MATERIAL UNO
19. DO NOT SCALE DRAWINGS
20. PROVIDE ALL NECESSARY BLOCKING, BACKING, & FRAMING FOR LIGHT FIXTURES, ELECTRIC UNITS, AC EQUIP, RECESSED ITEMS, AND ALL OTHER ITEMS AS REQ.
21. WHERE LARGER STUDS OR FURRING ARE REQ TO COVER PIPING AND CONDUITS, THE LARGER STUD SIZE OR FURRING SHALL EXTEND THE FULL SURFACE OF THE WALL WIDTH AND LENGTH WHERE THE FURRING OCCURS, UNO.
22. ALL DOORS SHALL BE OPERABLE FROM THE INSIDE W/O THE USE OF A KEY OR SPECIAL KNOWLEDGE OF EFFORT. EXIT SIGNS SHALL BE PROVIDED AT ALL EXITS AS REQ BY THE APPLICABLE CODES. ALL DOOR SWINGS SERVING AN OCCUPANT LOAD OF 50 OR GREATER SHALL SWING IN THE DIRECTION OF TRAVEL.
23. ALL GLASS AND GLAZING SHALL COMPLY WITH THE APPLICABLE CODES.
24. WALL AND CLG MATERIALS SHALL NOT EXCEED THE FLAME SPREAD CLASSIFICATIONS IN THE APPLICABLE CODES.
25. SURVEYORS CERTIFICATE REQ PRIOR TO FINAL COMPLETION.
26. THE CONTRACTOR SHALL COMPLY WITH THE APPLICABLE CODES FOR FIRE SAFETY DURING CONSTRUCTION AND DEMOLITION.
27. A DSA CERTIFIED CLASS 1 PROJECT INSPECTOR EMPLOYED BY THE DISTRICT (OWNER) AND APPROVED BY THE DIVISION OF THE STATE ARCHITECT (DSA) SHALL PROVIDE CONTINUOUS INSPECTION OF THE WORK. THE DUTIES OF THE INSPECTOR ARE DEFINED IN SECTION 4-342, CALIFORNIA BUILDING STANDARDS ADMINISTRAIVE CODE (PART 1, TITLE 24, CCR)
28. A DSA ACCEPTED TESTING LABORATORY DIRECTLY EMPLOYED BY THE DISTRICT (OWNER) SHALL CONDUCT ALL THE REQ TESTS AND INSPECTIONS FOR THE PROJECT.
29. CHANGE TO THE APPROVED DWGS AND SPECIFICATIONS SHALL BE MADE BY ADDENDA OR CONSTRUCTION CHANGE DOCUMENT (CCD) APPROVED BY DSA, AS REQ BY SECTION 4-338, PART 1, TITLE 24, CCR.
30. THE INTENT OF THESE DWGS AND SPECIFICATIONS IS THAT THE WORK OF THE ALTERATION, REHABILITATION OR RECONSTRUCTION IS TO BE IN ACCORDANCE WITH TITLE 24, CCR. SHOULD ANY EXG CONDITIONS SUCH AS DETERIORATION OR NON-COMPLYING CONSTRUCTION BE DISCOVERED WHICH IS NOT COVERED BY THE CONTRACT DOCUMENTS WHEREIN THE FINISHED WORK WILL NOT COMPLY WITH TITLE 24, CCR, A CONSTRUCTION CHANGE DOCUMENT (CCD), OR A SEPARATE SET OF PLANS AND SPECIFICATIONS, DETAILING AND SPECIFYING THE REQ WORK SHALL BE SUBMITTED TO AND APPROVED BY DSA BEFORE PROCEEDING WITH THE WORK. (SECTION 4-317(c), PART 1, TITLE 24, CCR)

FIRE AND LIFE SAFETY NOTES

1. PLANS FOR THE FIRE SPRINKLER SYSTEMS MUST BE APPROVED BY THE AUTHORITY HAVING JURISDICTION (AHJ) PRIOR TO INSTALLATION. SUBMIT PLANS IN A MANNER WHICH WILL NOT IMPEDE THE PROGRESS OF CONSTRUCTION.
2. FIRE SPRINKLER SYSTEMS & INSTALLATION SHALL CONFORM W/ THE APPLICABLE STANDARDS AND CODES.
3. FIRE SPRINKLER SYSTEMS TO BE TIED INTO THE ALARM SYSTEM PER THE APPLICABLE CODES.
4. AUTOMATIC SPRINKLER SYSTEM(S) SHALL BE SUPERVISED BY AN APPROVED CENTRAL OR REMOTE STATION SERVICE, AND/OR SHALL BE PROVIDED W/ A LOCAL ALARM WHICH WILL GIVE AN AUDIBLE SIGNAL.
5. FIRE SPRINKLER SYSTEM(S) & ALL CONTROL VALVES SHALL BE SUPERVISED BY A U.L. LISTED CENTRAL ALARM STATION OR PER THE APPLICABLE CODES.
6. FIRE HYDRANT & FIRE SPRINKLER SYSTEM(S) SHALL BE FLUSHED THOROUGHLY BEFORE CONNECTION IS MADE TO EXISTING SYSTEM STUBOUTS & WITNESSED BY THE PROJECT INSPECTOR.
7. A HYDROSTATIC TEST (200 PSI PRESSURE FOR 2 HRS. OR @ 50 PSI IN EXCESS OF THE MIN. STATIC PRESSURE WHEN IT IS IN EXCESS OF 150 PSI) SHALL BE WITNESSED BY THE PROJECT INSPECTOR PRIOR TO COVERING PIPING JOINTS.
8. A 3' CLR SPACE SHALL BE MAINTAINED AROUND THE CIRCUMFERENCE OF FIRE HYDRANTS EXCEPT AS OTHERWISE REQ OR APPROVED PER THE APPLICABLE CODES.
9. THRUST BLOCKS SHALL BE PROVIDED WHEREVER PIPE CHANGES DIRECTION.
10. ALL PIPE SHALL BE UL LISTED FOR FIRE SERVICE SYSTEMS, CLASS 200 MIN.
11. FIRE DEPARTMENT CONNECTIONS SHALL BE LOCATED W/I 100' FROM A PUBLIC FIRE HYDRANT PER THE APPLICABLE STANDARDS AND CODES.
12. FIRE SPRINKLER RISER SHALL BE LOCATED WITHIN 5 FT OF THE EXT WALL (OR AS REQ BY THE AHJ) AND TERMINATE 6" ABV FF
13. AN ALL-WEATHER FIRE ACCESS ROAD SHALL BE IN PLACE BEFORE ANY COMBUSTIBLE MATERIALS ARE PLACED ON THE SITE OR AS REQ BY THE AHJ.
14. STORAGE, DISPENSING, OR USE OF ANY FLAMMABLE & COMBUSTIBLE LIQUIDS, FLAMMABLE & COMPRESSED GASES & OTHER HAZARDOUS MATERIALS SHALL COMPLY W/ THE APPLICABLE CODES.
15. EXIT SIGNS SHALL BE POSTED OVER EXIT DOORS & DIRECTIONAL EXIT SIGNS SHALL BE LOCATED TO DIRECT PERSONS TOWARD EXIT DOORS.
16. EXIT SIGNS SHALL BE SELF-LUMINOUS TYPE OR ELECTRONICALLY ILLUMINATED & ENERGIZED FROM SEPARATE CIRCUITS, ONE OF WHICH SHALL BE FROM STORAGE BATTERIES OR AN ON-SITE GENERATOR, FOR A DURATION OF 90 MINUTES PER THE APPLICABLE CODES.
17. EXIT DOORS SHALL BE OPENABLE FROM THE INSIDE WITHOUT THE USE OF A KEY OR ANY SPECIAL KNOWLEDGE OR EFFORT.
18. ACCESS GATE(S) SHALL BE OPENABLE W/ FIRE DEPT MASTER KEY FROM THE EXTERIOR.
19. CURBS ALONG FIRE LANES SHALL BE PAINTED SAFETY RED & MARKED "FIRE LANE NO PARKING" W/ 3" WHITE LETTERS ON THE TOP OF CURBING EVERY 30' AS INDICATED ON THE APPROVED DRAWINGS.
20. APPROVED NUMBERS OR ADDRESSES SHALL BE PROVIDED FOR ALL NEW & EXG BLDGS IN SUCH A POSITION AS TO BE PLAINLY VISIBLE & LEGIBLE FROM THE STREET OR ROAD FRONTING THE PROPERTY PER THE APPLICABLE CODES.
21. PROVIDE PERMANENT OR TEMPORARY STANDPIPES WHILE BUILDING IS UNDER CONSTRUCTION PER THE APPLICABLE CODES.
22. PROVIDE FIRE EXTINGUISHERS PER THE REQ THE APPLICABLE STANDARDS AND CODES.

RESPONSIBILTY FOR JOB SITE SAFETY

NOTICE TO PERSONS PERFORMING WORK ON JOB SITE, INCLUDING CONTRACTORS, SUBCONTRACTORS, MATERIAL SUPPLIERS AND ANY AGENTS OR EMPLOYEES THEREOF

THESE PLANS AND SPECIFCATIONS DO NOT PROVIDE ANY DIRECTION OR INSTRUCTIONS TO CONTRACTORS, SUBCONTRACTORS, MATERIAL SUPPLIERS OR THEIR EMPLOYEES OR AGENTS RELATED TO CONSTRUCTION MEANS, METHODS, TECHNIQUES, SEQUENCES OR PROCEDURES, SAFETY PRECAUTIONS, MANNERS OR METHODS OF EGRESS OR INGRESS, INCLUDING BUT NOT LIMITED TO JOB SITE SAFETY, THE PHYSICAL CONDITION OF THE JOB SITE, THE MANNER OR METHOD IN WHICH THE AREA WHERE WORK IS PERFORMED IS ACCESSED BY WORKERS, AND SAFETY PROGRAMS OR SAFETY PROTOCOLS OF ANY KIND IN CONNECTION WITH THE WORK. ALL OF THE FOREGOING ARE SOLELY AND EXCLUSIVELY THE RESPONSIBILITY OF THE CONTRACTOR, SUBCONTRACTOR, MATERIAL SUPPLIERS, OR ANY AGENTS OR EMPLOYEES THEREOF.

THE ARCHITECT EXPRESSLY DISCLAIMS ANY CONTROL OVER AND RESPONSIBILITY FOR CONSTRUCTION MEANS, METHODS, TECHNIQUES, SEQUENCES OR PROCEDURES, SAFETY PRECAUTIONS, MANNERS OR METHODS OF EGRESS OR INGRESS, INCLUDING BUT NOT LIMITED TO JOB SITE SAFETY, THE PHYSICAL CONDITION OF THE JOB SITE, THE MANNER OR METHOD IN WHICH THE AREA WHERE WORK IS PERFORMED IS ACCESSED BY WORKERS, AND SAFETY PROGRAMS OR SAFETY PROTOCOLS OF ANY KIND IN CONNECTION WITH THE WORK.

THE ARCHITECT HAS NOT CONDUCTED AN EVALUATION OR ANALYSIS OF SAFETY PROCEDURES OR APPLICABLE LAW REGARDING OR RELATING TO ACCESSING THE JOB SITE OR AREAS OF THE WORK DURING THE COURSE OF CONSTRUCTION.

THE ARCHITECT, THE ARCHITECT'S DESIGNS, AND ANY OTHER WORK PERFORMED BY THE ARCHITECT DO NOT ADDRESS, ANALYZE OR PROVIDE ANY DIRECTION OR ADVICE TO ANY PERSON OR ENTITY ON WHETHER OR NOT THE USE OF EXISTING LADDERS, DOORS, RAILINGS, INGRESS AND INGRESS ROUTES OR THE LIKE ARE IN COMPLIANCE OR NON-COMPLIANCE WITH OSHA, CAL-OSHA(CALIFORNIA ONLY), OR ANY OTHER APPLICABLE STATUTE, REGULATION, OR STANDARD RELATED TO JOB SITE SAFETY DURING THE COURSE OF CONSTRUCTION OF THE IMPROVEMENTS.

LIST OF APPLICABLE CODES

LIST OF APPLICABLE CODES

2025	CALIFORNIA ADMINISTRATIVE CODE (CAC), PART 1, TITLE 24 CCR
2025	CALIFORNIA BUILDING CODE (CBC), PART 2, TITLE 24 CCR
2025	CALIFORNIA ELECTRICAL CODE (CEC), PART 3, TITLE 24 CCR
2025	CALIFORNIA MECHANICAL CODE (CMC), PART 4, TITLE 24 CCR
2025	CALIFORNIA PLUMBING CODE (CPC), PART 5, TITLE 24 CCR
2025	CALIFORNIA ENERGY CODE, PART 6, TITLE 24 CCR
2025	CALIFORNIA FIRE CODE (CFC), PART 9, TITLE 24 CCR
2025	CALIFORNIA EXISTING BUILDING CODE (CEBC), PART 10, TITLE 24 CCR
2025	CALIFORNIA GREEN BUILDING STANDARDS CODE (CALGREEN), PART 11, TITLE 24 CCR
2025	CALIFORNIA REFERENCED STANDARDS CODE, PART 12, TITLE 24 CCR

TITLE 19 CCR, PUBLIC SAFETY, STATE FIRE MARSHAL REGULATIONS

APPLICABLE STANDARDS

FOR A LIST OF APPLICABLE STANDARDS, INCLUDING CALIFORNIA AMENDMENTS TO THE NFPA STANDARDS, REFER TO CBC CHAPTER 35 AND CFC CHAPTER 80.

VICINITY MAP

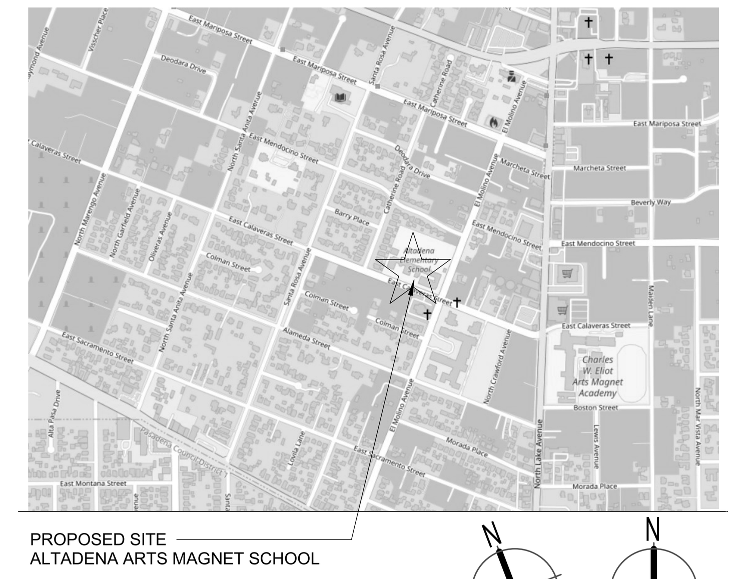

PROPOSED SITE
ALTADENA ARTS MAGNET SCHOOL

ADDRESS:
743 E/ CALAVERAS STREET
ALTADENA, CA 91001

TRUE NORTH PROJECT NORTH

PROJECT SCOPE

THE SCOPE OF WORK INCLUDES PARKING LOT EXPANSION AND THE RELOCATION OF THE EXISTING PLAYGROUND. THE PARKING LOT EXPANSION INCLUDES ASPHALT PAVING, CONCRETE PAVING, CONCRETE PAVERS, FENCING, GATES, SITE LIGHTING, IRRIGATION, LANDSCAPE, PV CARPORT PC #04-123955 AND FIRE LANE PAVEMENT. PLAYGROUND SCOPE TO INCLUDE HARDSCAPE, LANDSCAPE, PLAY EQUIPMENT, SITE RETAINING WALLS AND AMPTHITHEATER SEATING.

LIMIT OF WORK

THE INTENT OF THE LIMIT OF WORK LINE IS TO DESCRIBE IN GENERAL THE AREAS AFFECTED BY PROJECT CONSTRUCTION. IT IS NOT INTENDED TO BE AN EXACT INDICATION OR EDGE OF THE CONSTRUCTION AREA. THE CONTRACTOR SHOULD VISIT THE SITE & BECOME FAMILIAR W/ EXG CONDITIONS & THEIR RELATIONSHIP TO THE WORK PROPOSED IN THE CONTRACT DOCUMENTS. ALL ITEMS NECESSARY FOR THE PROPER EXECUTION & COMPLETION OF THE WORK SHALL BE INCLUDED. THE CONTRACT DOCUMENTS ARE COMPLEMENTARY & WHAT IS REQ BY ONE SHALL BE BINDING AS IF REQ BY ALL TO THE EXTENT THAT IT IS REASONABLY INFERABLE FROM THEM AS BEING NECESSARY TO PRODUCE THE INTENDED RESULTS.

FIRE DEPARTMENT NOTES

1. PROVIDE A MINIMUM, UNOBSTRUCTED WIDTH OF 20 FEET, CLEAR TO SKY, VEHICULAR ACCESS TO WITHIN 150 FEET OF ALL PORTIONS OF THE UILDING EXTERIOR WALLS. 2019 C.F.C. SECTION 503.
2. VEHICULAR ACCESS MUST BE MAINTAINED SERVICEABLE THROUGHOUT CONSTRUCTION.
3. "NO PARKING - FIRE LANE" MARKING SHALL BE PROVIDED FOR FIRE APPARATUS ACCESS ROADS. FIRE LANES SHALL BE MAINTAINED IN A CLEAN AND LEGIBLE CONDITION AT ALL TIMES AND REPLACED OR REPAIRED WHEN NECESSARY TO PROVIDE ADEQUATE VISIBILITY PER 2019 C.F.C. SECTION 503.3.
4. FIRE EXTINGUISHER REQUIREMENTS SHALL BE DETERMINED BY FIELD INSPECTOR. 2016 C.F.C. SECTION 906.
5. BUILDING ADDRESS NUMBERS TO BE PROVIDED ON THE FRONT OF ALL BUILDINGS AND SHALL BE VISIBLE AND LEGIBLE FROM STREET FRONTING THE PROPERTY. SAID NUMBERS SHALL CONTRAST W/ THEIR BACKGROUND PER 2019 C.F.C. SECTION 505.1.
6. PROVIDE A KEY BOX LOCATION AT ALL GATED ENTRANCES AS REQUIRED BY 2016 C.F.C. SECTION 506.
7. COMMERCIAL DUMPSTERS OR CONTAINERS WITH AN INDIVIDUAL CAPACITY OF 1.5 CUBIC YARDS OR GREATER SHALL NOT BE STORED OR PLACED WITHIN FIVE FEET OF COMBUSTIBLE WALLS, OPENINGS OR COMBUSTIBLE ROOF EAVE LINES UNLESS AREAS CONTAINING DUMPSTERS ARE PROTECTED BY AN APPROVED SPRINKLER SYSTEM PER 2019 C.F.C. SECTION 304.3.3.
8. ROADS MUST BE CONSTRUCTED OF A MATERIAL WHICH PROVIDES AN ALL WEATHER DRIVING SURFACE AND CAPABLE OF SUPPORTING THE 70,000 POUND IMPOSED LOAD FOR THE FIRE APPARATUS. CALCULATIONS STAMPED AND SIGNED BY A REGISTERED ENGINEER SHALL CERTIFY THAT THE PROPOSED URFACE MEETS THE ABOVE CRITERIA.
9. ALL EXIT DOORS SHALL BE OPERABLE FROM THE INSIDE WITHOUT THE USE OF A KEY OR SPECIAL KNOWLEDGE OR EFFORT. EXIT SIGNS SHALL BE PROVIDED AT ALL EXITS AS REQUIRED BY CALIFORNIA BUILDING CODE, CHAPTER 10. ALL DOOR SWINGS SERVING AN OCCUPANT LOAD OF 50 OR GREATER SHALL SWING IN THE DIRECTION OF TRAVEL.
10. PROVIDE EXIT ILLUMINATION PER THE REQUIREMENTS OF C.B.C., CHAPTER
11. COMPLIANCE WITH CFC CHAPTER 33, "FIRE SAFETY DURING CONSTRUCTION AND DEMOLITION" AND CBC CHAPTER 33 WILL BE ENFORCED.
12. EMERGENCY VEHICLE ACCESS ROADS AND ON-SITE FIRE HYDRANTS SHALL BE IN SERVICE AND OPERABLE PRIOR TO LOADING THE SITE WITH COMBUSTIBLE MATERIAL.

STATEMENT OF GENERAL CONFORMANCE

Application No.: # 03-125900
File No.: 19-80)

The drawings identified as follows:

- ☒ All drawings sheets included in this set not bearing my stamp and signature.
- ☐ Drawing sheets denoted in the sheet index as follows: _______________
- ☐ Drawing sheets included under the following PC approval(s):__________

have been prepared by other design professionals or consultants who are licensed and authorized to prepare such drawings (plans) in this state. They have been examined by me for:

1. Design intent and appear to meet the appropriate requirements of Title 24, California Code of Regulations and the project specifications prepared by me, and
2. Coordination with my drawings (plans) and specifications and are acceptable for incorporation into the construction of this project.

Per Title 24, Part 1, Section 4-316(b): This Statement of General Conformance shall not be construed as relieving me of my rights, duties, and responsibilities under Sections 17302 and 81138 of the Education Code and Sections 4-336, 4-341 and 4-344 of Title 24, Part 1.

Signature ________ Date 02 / 02 / 2026

Architect or Engineer designated to be in general responsible charge

Print Name: Nicole Mehta License Number: C-30830 Expiration Date: 09 / 30 / 2027

PROJECT DIRECTORY

CLIENT INFORMATION

NAME: PASADENA UNIFIED SCHOOL DISTRICT
ADDRESS: 351 S. HUDSON AVE.
CITY,STATE, ZIP: PASADENA, CA 91109
DIRECTOR OF FACILITY
TEL: 626-396-3619
CONTACT: MICHAEL DUNNING E-MAIL: dunning.michael@pusd.us

ARCHITECT

NAME: LPA, INC.
ADDRESS: 5301 CALIFORNIA AVE, SUITE 100
CITY,STATE, ZIP: IRVINE, CA 92617
TEL: 949/261-1001
CONTACT: NICOLE MEHTA E-MAIL: nmehta@lpadesignstudios.com

LANDSCAPE ARCHITECT CONCEPTUAL DESIGN

NAME: NEBELONG V/HELLE NEBELONG
ADDRESS: JÆGERSBORG ALLÉ 227 ST TV
CITY,STATE, ZIP: GENTOFTE, DENMARK, 2820
TEL: +45 22445703
CONTACT: HELLEN BELONG E-MAIL: hellenebelong@hotmail.com

LANDSCAPE ARCHITECT

NAME: LPA, INC.
ADDRESS: 5301 CALIFORNIA AVE, SUITE 100
CITY,STATE, ZIP: IRVINE, CA 92617
TEL: 949/701-4103
CONTACT: JEFFERY YAMAMOTO E-MAIL: jyamamoto@lpadesignstudios.com

CIVIL ENGINEER

NAME: LPA, INC.
ADDRESS: 5301 CALIFORNIA AVE, SUITE 100
CITY,STATE, ZIP: IRVINE, CA 92617
TEL: 949/701-4033
CONTACT: KATHEREEN SHINKAI E-MAIL: kshinkkai@lpadesignstudios.com

GEOTECHNICAL ENGINEER

NAME: KOURY ENGINEERING & TESTING, INC.
ADDRESS: 5711 SCHAEFER AVE.
CITY,STATE, ZIP: CHINO, CALIFORNIA 91710
TEL: 909-606-6111
CONTACT: JACQUES ROY E-MAIL: jacquesr@kourygeo.com

STRUCTURAL ENGINEER

NAME: LPA, INC.
ADDRESS: 5301 CALIFORNIA AVE, SUITE 100
CITY,STATE, ZIP: IRVINE, CA 92617
TEL: 949/261-1001
CONTACT: DANIEL WANG E-MAIL: dwang@lpadesignstudios.com

ELECTRICAL ENGINEER

NAME: IMEG CORP
ADDRESS: 300 NORTH LAKE AVE, 12TH FLOOR
CITY,STATE, ZIP: PASADENA, CA 91101
TEL: 949/463-2800
CONTACT: KRISTINA NAKAMOTO E-MAIL: kristina.m.nakamoto@imegcorp.com

LPA
ARCHITECTURE ENGINEERING INTERIOR DESIGN LANDSCAPE ARCHITECTURE PLANNING
949-261-1001 Office
LPADesignStudios.com
5301 California Avenue, Suite 100
Irvine, California 92617

LICENSED ARCHITECT NICOLE MEHTA C30830 9/30/2027 RENEWAL DATE STATE OF CALIFORNIA

This document and all other project documents, ideas, aesthetics and designs incorporated therein are instruments of service. All project documents are copyright protected, are the property of LPA, Inc. (LPA) and cannot be lawfully used in whole or in part for any project or purpose except as set forth in the contractual agreement between LPA and its Client. The unauthorized disclosure and/or use of the project documents (including the creation of derivative works), may give rise to liability for copyright infringement, unlawful disclosure, use or misappropriation of property rights held by LPA. The unauthorized use of the project documents will give rise to the recovery of monetary losses and damages including attorney fees and costs for which the unauthorized user will be held liable.
Project documents describe the design intent of the work and are not a representation of as-built or existing conditions. LPA is not responsible for any discrepancies between the project documents and the existing conditions.

© LPA, Inc.

ALTADENA ARTS MAGNET SCHOOL

743 E. CALAVERA ST,
ALTADENA CA 91001

Developed for
PASADENA UNIFIED SCHOOL DISTRICT

Submittal	Date
DSA SUBMITTAL	02/02/2026
DSA SUBMITTAL V2	03/13/2026

Revision	Date

Job Number	33366
Checked By	Checker
Scale	As indicated

GENERAL PROJECT INFORMATION

G0.20

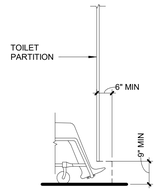

CBC 11B-604.8.1.4 & CBC 11B-604.8.1.1.3

ELEVATION ADULT

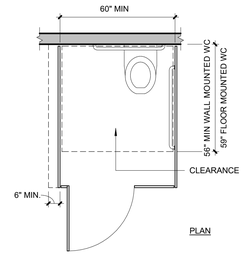

PLAN

NOTE:
TOE CLEARANCE AT THE SIDE PARTITION IS NOT REQUIRED IN A COMPARTMENT GREATER THAN 66" WIDE

WHEELCHAIR ACCESSIBLE TOILET COMPARTMENT TOE CLEARANCE | 3/8" = 1'-0" | 08

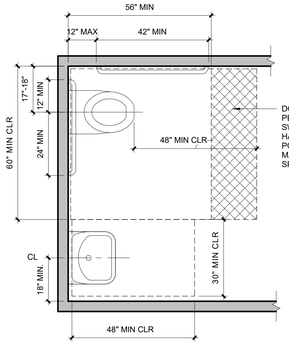

CBC 11B-604.3.1, CBC 11B-604.5.1, & CBC 11B-606.2

ACCESSIBLE FIXTURES AT SINGLE ACCOMMODATION RESTROOM | 1/2" = 1'-0" | 15

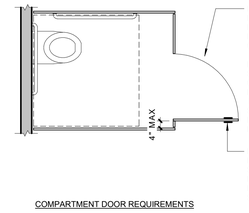

COMPARTMENT DOOR REQUIREMENTS

NOTE: TOILET COMPARTMENT DOORS INCLUDING HARDWARE, SHALL BE MIN. 32" CLR. AND COMPLY WITH CBC. TOILET COMPARTMENT DOORS IN THE SIDE OF THE PARITION SHALL BE MIN. 34" CLR.

CBC 11B-604.8.1.2

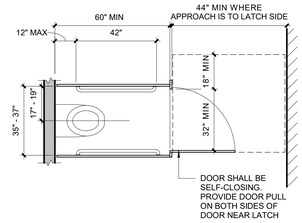

AT AMBULATORY STALL

CBC 11B-604.2,CBC 11B-604.5.1, & CBC 11B-604.8.2

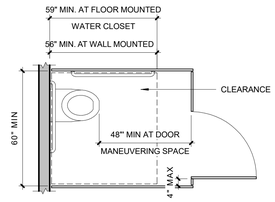

AT OUT-SWINGING DOOR

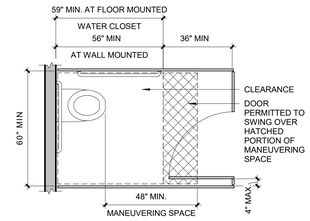

AT IN-SWINGING DOOR

CBC 11B-604.8.1.1.3 & CBC 11B-604.8.1.2

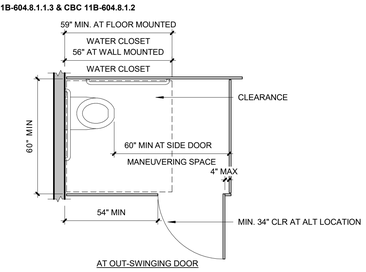

AT OUT-SWINGING DOOR

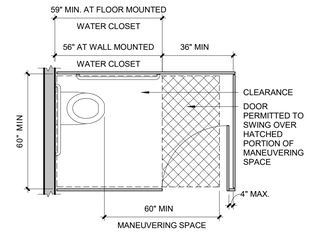

AT IN-SWINGING DOOR

CBC 11B-604.8.1.1.2 & CBC 11B-604.8.1.2

ACCESSIBLE TOILET CLEARANCES | 3/8" = 1'-0" | 06

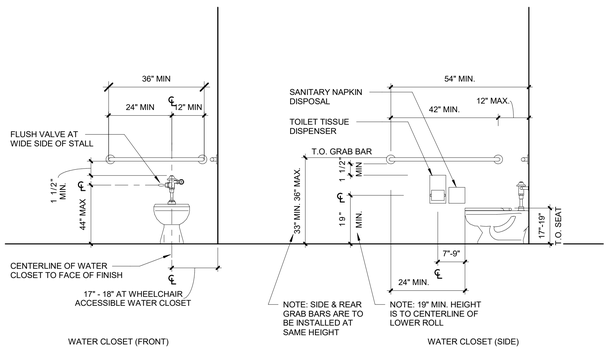

CBC 11B-604.1, CBC 11B-604.2, CBC 11B-604.4, CBC 11B-604.7, CBC 11B-604.5.1, CBC 11B-609.3, & CBC 11B-609.4

RESTROOM MOUNTING HEIGHTS | 1/2" = 1'-0" | 17

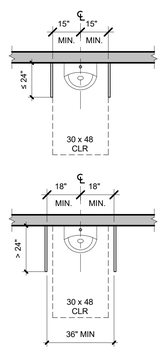

CBC 11B-305.7.1

ACCESSIBLE URINAL PARTITIONS | 3/8" = 1'-0" | 14

* REQUIRED MOUNTING HEIGHTS

DIMENSION	A (INCHES)	E (INCHES) AGES 9-12
TOILET CENTERING FROM WALL	17-18	15
TOILET SEAT HEIGHT / DIM. TO TOP OF SEAT	17-19	15
GRAB BAR HEIGHT	33-36	25-27
TOILET PAPER IN FRONT OF TOILET	7 MIN - 9 MAX	7 MIN - 9 MAX
NAPKIN DISPOSAL	19" MIN.	17" MIN.
TISSUE DISPENSER OUTLET	19 MIN	17 MIN
DISPENSER OR MIRROR HEIGHT	40 MAX	36 MAX
LAVATORY / SINK TOP HEIGHT	34 MAX	31 MAX
LAVATORY / SINK KNEE CLEARANCE	27 MIN	24 MIN
LAVATORY / SINK APRON CLEARANCE	29 MIN	29 MIN
URINAL LIP HEIGHT	17 MAX	17 MAX
URINAL FLUSH HANDLE HEIGHT	44 MAX	44 MAX
URINAL PROJECTION FROM WALL	13.5 MIN	13.5 MIN
DRINKING FOUNTAIN BUBBLER HEIGHT	36 MAX	32 MAX
DRINKING FOUNTAIN KNEE CLEARANCE	27 MIN	24 MIN
RAMP / STAIR HANDRAIL HEIGHT	34 - 38	27 **

NOTES:
A = ADULT DIMENSIONS (AGE 12 AND OVER)
E = ELEMENTARY DIMENSIONS
K = KINDERGARTEN DIMENSIONS

** IN ADDITION TO ADULT RAIL, MAINTAIN 9" MIN. VERTICAL CLEARANCE BETWEEN UPPER & LOWER HANDRAILS TO HELP PREVENT ENTRAPMENT

FOR MOUNTING ANCHORAGES, USE MNFR. SUPPLIED FASTENERS

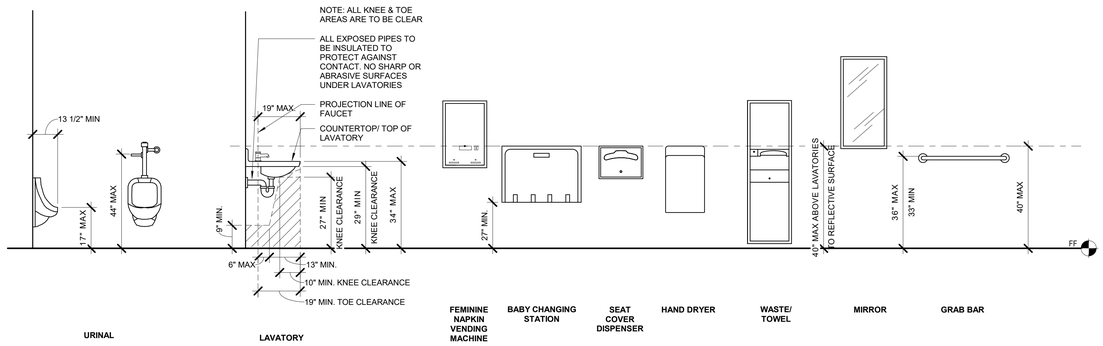

CBC 11B306.2, CBC 11B306.2.2, CBC 11B306.3, CBC 11B-603.3, CBC 11B603.5, CBC 11B-605.2, CBC 11B-606, & CBC 11B609.4

ACCESSIBLE MOUNTING HEIGHTS | 1/2" = 1'-0" | G0.31 | 05

GENERAL NOTES

1. ALL DIMENSIONS SHOWN ON THIS SHEET ARE TO FACE OF FINISH, U.N.O.
2. ALL DIMENSIONS AND CLEARANCES SHOWN ON THIS SHEET ARE APPLICABLE THROUGHOUT THE DOCUMENTS WHEREVER THE DESCRIBED CONDITIONS OCCUR AND MAY OR MAY NOT BE SPECIFICALLY REFERENCED.
3. CONTRACTOR IS RESPONSIBLE FOR COMPLYING WITH ALL REQUIRED CLEARANCES.
4. CONTRACTOR SHALL BRING DISCREPANCIES TO THE IMMEDIATE ATTENTION OF THE ARCHITECT.
5. FLOOR SLOPE AT ALL WHEELCHAIR SPACES TO BE 1:48 MAX. IN ANY DIRECTION.
6. ACCESSIBLE SIGNAGE REQUIREMENTS SEE SHEET A10.40

LPA
ARCHITECTURE ENGINEERING INTERIOR DESIGN
LANDSCAPE ARCHITECTURE PLANNING
949-261-1001 Office
LPADesignStudios.com
5301 California Avenue, Suite 100
Irvine, California 92617

LICENSED ARCHITECT NICOLE MENTA C30830 9/30/2027 REGISTERED DATE STATE OF CALIFORNIA

This document and all other project documents, ideas, aesthetics and designs incorporated therein are instruments of service. All project documents are copyright protected, are the property of LPA, Inc. (LPA) and cannot be lawfully used in whole or in part for any project or purpose except as set forth in the contractual agreement between LPA and its Client. The unauthorized disclosure and/or use of the project documents (including the creation of derivative works), may give rise to liability for copyright infringement, unlawful disclosure, use or misappropriation of property rights held by LPA. The unauthorized use of the project documents will give rise to the recovery of monetary losses and damages including attorney fees and costs for which the unauthorized user will be held liable.
Project documents describe the design intent of the work and are not a representation of as-built or existing conditions. LPA is not responsible for any discrepancies between the project documents and the existing conditions.

© LPA, Inc.

ALTADENA ARTS MAGNET SCHOOL

743 E. CALAVERA ST,
ALTADENA CA 91001

Developed for
PASADENA UNIFIED SCHOOL DISTRICT

Revision	Date

Submittal	Date
DSA SUBMITTAL	02/02/2026
DSA SUBMITTAL V2	03/13/2026

Job Number	33366
Checked By	LPA
Scale	As indicated

ACCESSIBILITY DETAILS

G0.31

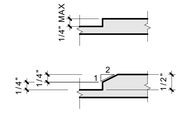

11B-303.2

11B-303.3

CHANGES IN LEVEL | 6" = 1'-0" | G0.32 | 24

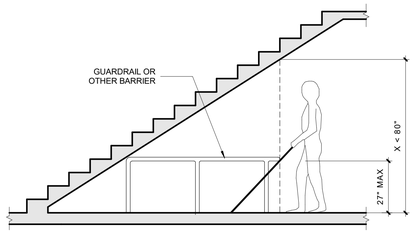

CBC 11B-307.4

VERTICAL CLEARANCE | 3/8" = 1'-0" | G0.32 | 20

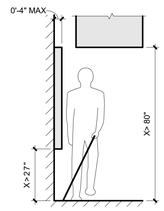

11B-307.2

ACCESSIBLE PATH OF TRAVEL PROTRUDING OBJECT LIMITS | 3/8" = 1'-0" | G0.32 | 16

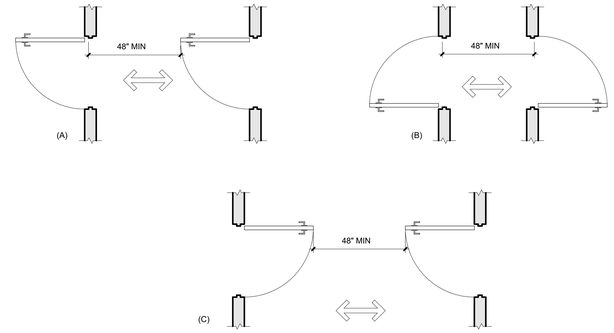

CBC 11B-404.2.6

DOOR CLEARANCES - DOORS IN SERIES | 3/8" = 1'-0" | 08

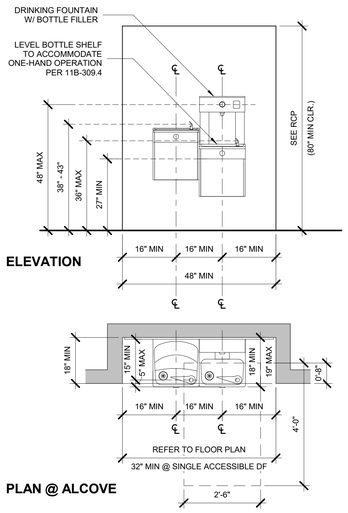

ELEVATION

PLAN @ ALCOVE

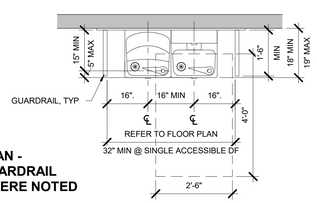

PLAN - GUARDRAIL WHERE NOTED

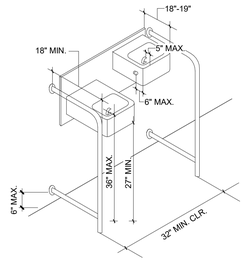

1. DRINKING FOUNTAIN SHALL BE ACCESSIBLE.
2. DRINKING FOUNTAINS SHALL BE LOCATED COMPLETELY WITHIN ALCOVES OR OTHERWISE POSITIONED SO AS NOT TO ENCROACH INTO PEDESTRIAN WAYS. THE ALCOVE IN WHICH THE WATER FOUNTAIN IS LOCATED SHALL NOT BE LESS THAN 32" IN WIDTH AND 18" IN DEPTH.
3. DRINKING FOUNTAIN SHALL BE A MINIMUM OF 18" AND A MAXIMUM OF 19" IN DEPTH AND THERE SHALL BE A CLEAR AND UNOBSTRUCTED KNEE SPACE UNDER THE DRINKING FOUNTAIN NOT LESS THAN 27" IN HEIGHT, 30" IN WIDTH AND 8" IN DEPTH, THE DEPTH MEASUREMENT BEING TAKEN FROM THE FRONT EDGE OF THE FOUNTAIN.
4. THERE SHALL BE TOE CLEARANCE OF 9" IN HEIGHT ABOVE THE FLOOR, AND 17" IN DEPTH FROM THE FRONT EDGE OF THE FOUNTAIN.
5. A CLEAR FLOOR SPACE AT LEAST 30" X 48" SHALL BE PROVIDED IN FRONT OF THE DRINKING FOUNTAIN TO ALLOW FORWARD APPROACH.
6. THE DRINKING FOUNTAIN BUBBLER SHALL BE ACTIVATED BY A MANUALLY OPERATED SYSTEM THAT IS FRONT MOUNTED OR SIDE MOUNTED AND LOCATED WITHIN 6" OF THE FRONT EDGE OF THE FOUNTAIN OR AN ELECTRONICALLY CONTROLLED DEVICE.
7. THE BUBBLER OUTLET ORIFICE SHALL BE LOCATED WITHIN 5" OF THE FRONT OF THE DRINKING FOUNTAIN AND SHALL BE WITHIN 36" OF THE FLOOR. **11B-602.6 WATER FLOW.** THE SPROUT SHALL PROVIDE A FLOW OF WATER 4 INCHES HIGH MINIMUM AND SHALL BE LOCATED 5 INCHES MAXIMUM FROM THE FRONT OF THE UNIT. THE ANGLE OF THE WATER STREAM SHALL BE MEASURED HORIZONTALLY RELATIVE TO THE FRONT FACE OF THE UNIT. WHERE SPROUTS ARE LOCATED LESS THAN 3 INCHES OF THE FRONT OF THE UNIT, THE ANGLE OF THE WATER STREAM SHALL BE 30 DEGREES MAXIMUM. WHERE SPROUTS ARE LOCATED BETWEEN 3 INCHES AND 5 INCHES MAXIMUM FROM THE FRONT OF THE UNIT, THE ANGLE OF THE WATER STREAM SHALL BE 15 DEGREES MAXIMUM.

CBC 11B-306.3, CBC 11B-602, & CBC 11B-602.9

DRINKING FOUNTAIN ALCOVE W/ BOTTLE FILLER | 1/2" = 1'-0" | G0.32 | 21

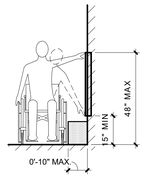

UNOBSTRUCTED SIDE REACH

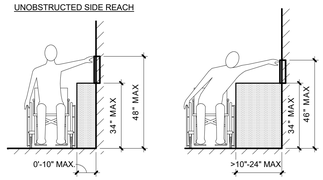

OBSTRUCTED HIGH SIDE REACH | OBSTRUCTED HIGH SIDE REACH

CBC 11B-306.3.1 & CBC 11B-308.3.2

ACCESSIBLE SIDE REACH REQUIREMENTS | 3/8" = 1'-0" | G0.32 | 19

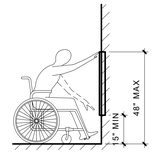

UNOBSTRUCTED FORWARD REACH

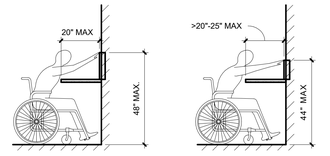

OBSTRUCTED HIGH FORWARD REACH | OBSTRUCTED HIGH FORWARD REACH

CBC 11B-308.2.1 & CBC 11B-308.2.2

ACCESSIBLE FORWARD REACH REQUIREMENTS | 3/8" = 1'-0" | G0.32 | 15

NOTE: ALIGN CENTER OF ALL WALL SWITCHES & WALL DEVICES @ CENTERLINES U.N.O.

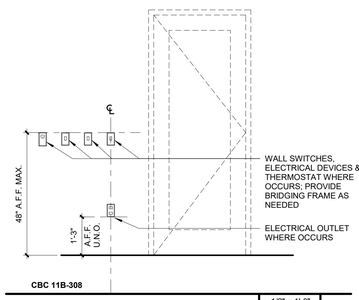

CBC 11B-308

TYPICAL DEVICE INSTALLATION | 1/2" = 1'-0" | G0.32 | 18

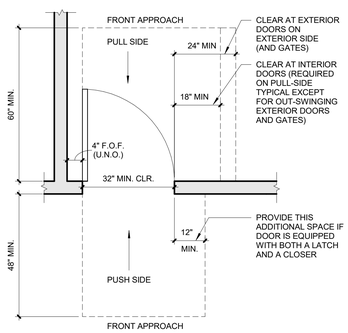

CBC 11B-404.2.3 & CBC 11B-404.2.4.1

TYPICAL CLEARANCES AT DOOR | 1/2" = 1'-0" | G0.32 | 14

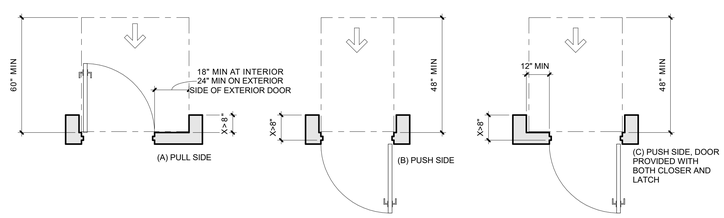

CBC 11B-404.2.4.3

RECESSED DOOR CLEARANCES | 3/8" = 1'-0" | 13

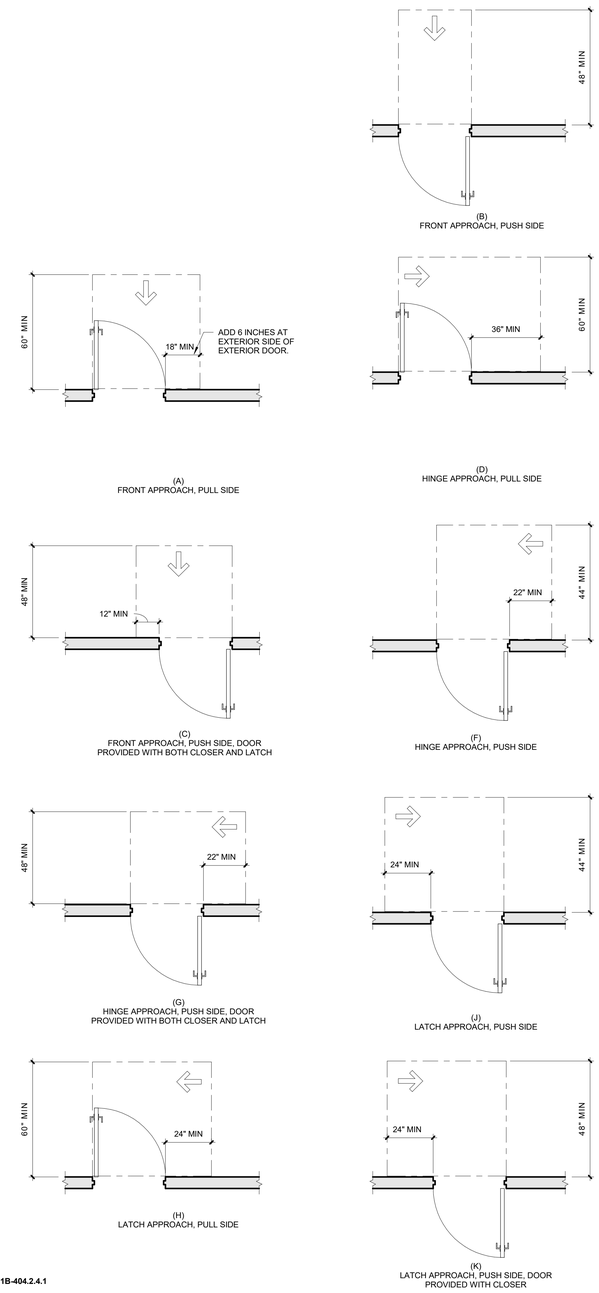

CBC 11B-404.2.4.1

DOOR CLEARANCES | 3/8" = 1'-0" | 05

GENERAL NOTES

1. ALL DIMENSIONS SHOWN ON THIS SHEET ARE TO FACE OF FINISH, U.N.O.
2. ALL DIMENSIONS AND CLEARANCES SHOWN ON THIS SHEET ARE APPLICABLE THROUGHOUT THE DOCUMENTS WHEREVER THE DESCRIBED CONDITIONS OCCUR AND MAY OR MAY NOT BE SPECIFICALLY REFERENCED.
3. CONTRACTOR IS RESPONSIBLE FOR COMPLYING WITH ALL REQUIRED CLEARANCES.
4. CONTRACTOR SHALL BRING DISCREPANCIES TO THE IMMEDIATE ATTENTION OF THE ARCHITECT.
5. FLOOR SLOPE AT ALL WHEELCHAIR SPACES TO BE 1:48 MAX. IN ANY DIRECTION.
6. ACCESSIBLE SIGNAGE REQUIREMENTS SEE SHEET A10.40

DOOR & GATE GENERAL NOTES

1. THE CLEAR OPENING WIDTH FOR A DOOR SHALL BE 32 INCHES MINIMUM. FOR A SWINGING DOOR IT SHALL BE MEASURED BETWEEN THE FACE OF THE DOOR AND THE STOP, WITH THE DOOR OPEN 90 DEGREES. THERE SHALL BE NO PROJECTIONS INTO IT BELOW 34"; UP TO 4" MAXIMUM PROJECTIONS ARE ALLOWED BETWEEN 34" AND 80" ABOVE THE FINISH FLOOR OR GROUND. DOOR CLOSERS AND STOPS SHALL BE PERMITTED TO BE 78" MINIMUM ABOVE THE FINISH FLOOR OR GROUND. **CBC SECTION 11B-404.2.3**.

2. HANDLES, PULLS, LATCHES, LOCKS, AND OTHER OPERABLE PARTS ON ACCESSIBLE DOORS SHALL COMPLY WITH CBC SECTION 11B-309.4 AND SHALL BE OPERABLE WITH ONE HAND AND SHALL NOT REQUIRE TIGHT GRASPING, PINCHING, OR TWISTING OF THE WRIST. OPERABLE PARTS OF SUCH HARDWARE SHALL BE 34" MINIMIMUM AND 44" MAXIMUM ABOVE FINISH FLOOR OR GROUND. WHERE SLIDING DOORS ARE IN THE FULLY OPEN POSITION, OPERATING HARDWARE SHALL BE EXPOSED AND USABLE FROM BOTH SIDES. **CBC SECTION 11B-404.2.7**.

3. THE LEVERS OF LEVER ACTUATED LATCHES OR LOCKS FOR DOORS AND ACCESSIBLE GATES SHALL BE CURVED WITH A RETURN TO WITHIN 1/2 INCHES OF THE GATE SURFACE TO PREVENT CATCHING ON THE CLOTHING OR PERSONS PER **CALIFORNIA REFERENCED STANDARD CODE. T-24 PART 12, SECTION 12-10-202, ITEM (F)**.

4. THE FORCE FOR PUSHING OR PULLING OPEN A DOOR SHALL BE AS FOLLOWS, PER **CBC SECTION 11B-404.2.9**:
   - INTERIOR HINGED DOORS, SLIDING OR FOLDING DOORS, AND EXTERIOR HINGED DOORS: 5 POUNDS (22.2N) MAXIMUM. THESE FORCES DO NOT APPLY TO THE FORCE REQUIRED TO RETRACT LATCH BOLTS OR DISENGAGE OTHER DEVICES THAT HOLD THE DOOR IN A CLOSED POSITION.
   - THE FORCE REQUIRED FOR ACTIVATING ANY OPERABLE PARTS, SUCH AS LEVER HARDWARE, OR DISENGAGING OTHER DEVICES SHALL BE 5 POUNDS (22.2N) MAXIMUM TO COMPLY WITH **CBC SECTION 11B-309.4**.

5. DOOR CLOSING SPEED SHALL BE AS FOLLOWS PER **CBC SECTION 11B-404.2.8**:
   - CLOSER SHALL BE ADJUSTED SO THAT THE REQUIRED TIME TO MOVE A DOOR FROM AN OPEN POSITION OF 90 DEGREES TO A POSITION OF 12 DEGREES FROM THE LATCH IS 5 SECONDS MINIMUM.
   - SPRING HINGES SHALL BE ADJUSTED SO THAT THE REQUIRED TIME TO MOVE A DOOR FROM AN OPEN POSITION OF 70 DEGREES TO THE CLOSED POSITION IS 1.5 SECOND MINIMUM.

6. THRESHOLDS SHALL COMPLY WITH **CBC SECTION 11B-404.2.5**.

7. FLOOR STOPS SHALL NOT BE LOCATED IN THE PATH OF TRAVEL AND 4" MAXIMUM FROM WALLS.

8. HARDWARE (INCLUDING PANIC HARDWARE) SHALL NOT BE PROVIDED WITH "NIGHT LATCH" (NL) FUNCTION FOR ANY ACCESSIBLE DOORS OR GATES UNLESS THE FOLLOWING CONDITIONS ARE MET: (SUCH CONDITIONS MUST BE CLEARLY DEMONSTRATED AND INDICATED IN THE SPECIFICATIONS)
   - SUCH HARDWARE HAS A 'DOGGING' FEATURE.
   - IT IS DOGGED DURING THE TIME THE FACILITY IS OPEN.
   - SUCH 'DOGGING' OPERATION IS PERFORMED ONLY BY EMPLOYEES AS THEIR JOB FUNCTION (NON-PUBLIC USE).

9. EMERGENCY EXIT & PANIC HARDWARE SHALL COMPLY WITH **SFM STANDARD 12-10-3, SECTION 12-10-302**: (A) THE CROSS-BAR SHALL EXTEND ACROSS NOT LESS THAN ONE-HALF THE WIDTH OF THE DOOR/GATE. (B) THE ENDS OF THE CROSS-BAR SHALL BE CURVED, GUARDED OR OTHERWISE DESIGNED TO PREVENT CATCHING ON THE CLOTHING OF PERSONS DURING EGRESS.

10. SWING DOORS AND GATE SURFACE WITHIN 10" OF THE FINISH FLOOR OR GROUND SHALL HAVE A SMOOTH SURFACE ON THE PUSH SIDE EXTENDING THE FULL WIDTH OF THE DOOR OR GATE. PARTS CREATING HORIZONTAL OR VERTICAL JOINTS IN THESE SURFACES SHALL BE WITHIN 1/16" OF THE SAME PLANE AS THE OTHER AND BE FREE OF SHARP OR ABRASIVE EDGES. CAVITIES CREATED BY ADDED KICK PLATES SHALL BE CAPPED. **CBC SECTION 11B-404.2.10**.

LPA
ARCHITECTURE ENGINEERING INTERIOR DESIGN
LANDSCAPE ARCHITECTURE PLANNING
949-261-1001 Office
LPADesignStudios.com
5301 California Avenue, Suite 100
Irvine, California 92617

LICENSED ARCHITECT NICOLE MEYER C30830 9/30/2027 REGISTERED DATE STATE OF CALIFORNIA

This document and all other project documents, ideas, aesthetics and designs incorporated therein are instruments of service. All project documents are copyright protected, are the property of LPA, Inc. (LPA) and cannot be lawfully used in whole or in part for any project or purpose except as set forth in the contractual agreement between LPA and its Client. The unauthorized disclosure and/or use of the project documents (including the creation of derivative works), may give rise to liability for copyright infringement, unlawful disclosure, use or misappropriation of property rights held by LPA. The unauthorized use of the project documents will give rise to the recovery of monetary losses and damages including attorney fees and costs for which the unauthorized user will be held liable.
Project documents describe the design intent of the work and are not a representation of as-built or existing conditions. LPA is not responsible for any discrepancies between the project documents and the existing conditions.

© LPA, Inc.

ALTADENA ARTS MAGNET SCHOOL

743 E. CALAVERA ST,
ALTADENA CA 91001

Developed for
PASADENA UNIFIED SCHOOL DISTRICT

Revision	Date

Submittal	Date
DSA SUBMITTAL	02/02/2026
DSA SUBMITTAL V2	03/13/2026

Job Number	33366
Checked By	LPA
Scale	As indicated

ACCESSIBILITY DETAILS

G0.32

DSA PR 15-01: Required Information for Path of Travel Upgrades on Construction Documents
Add responsible charge statement to Access Plan:

"Design Professional in General Responsible Charge Statement:
The POT identified in these construction documents meets the requirements of the current applicable California Building Code (CBC) accessibility provisions for path of travel requirements for alterations, additions and structural repairs. As part of the design of this project, the POT was examined and any elements, components or portions of the POT that were determined to be non-compliant with the CBC have been identified and the corrective work necessary to bring them into compliance has been included within the scope of this project's work through details, drawings and specifications incorporated into these construction documents. Any noncompliant elements, components or portions of the POT that will not be corrected by this project based on valuation threshold limitations or a finding of unreasonable hardship are indicated in these construction documents.

During construction, if POT items within the scope of the project represented as CBC compliant are found to be nonconforming beyond reasonable construction tolerances, the items shall be brought into compliance with the CBC as a part of this project by means of a construction change document."

(E) PARKING TABULATION
A# 03-113581

PARKING LOT	TOTAL SPACES	TOTAL ACCESSIBLE (REQUIRED)	TOTAL ACCESSIBLE (PROVIDED)
LOT	(E) 4	1 REQUIRED	1 EXISTING (INCL. 1 VAN ACC)

(N) PARKING TABULATION

PARKING LOT	TOTAL SPACES	TOTAL ACCESSIBLE (REQUIRED)	TOTAL ACCESSIBLE (PROVIDED)
LOT A	21	1 REQUIRED	1 (INCL. 1 VAN ACC) (INCL. 4 EV SPACES) (1 EV ACCESSIBLE EVCS INCL.)

NOTES:
1. REQUIRED NUMBER OF ACCESSIBLE STALLS PER 2025 CBC SECT. 11B-208 AND 11B-208.2.4.
2. THE NUMBER OF VAN ACCESSIBLE STALLS (REQUIRED AND PROVIDED) IS INCLUDED WITHIN THE COUNT OF TOTAL ACCESSIBLE (REQUIRED AND PROVIDED)

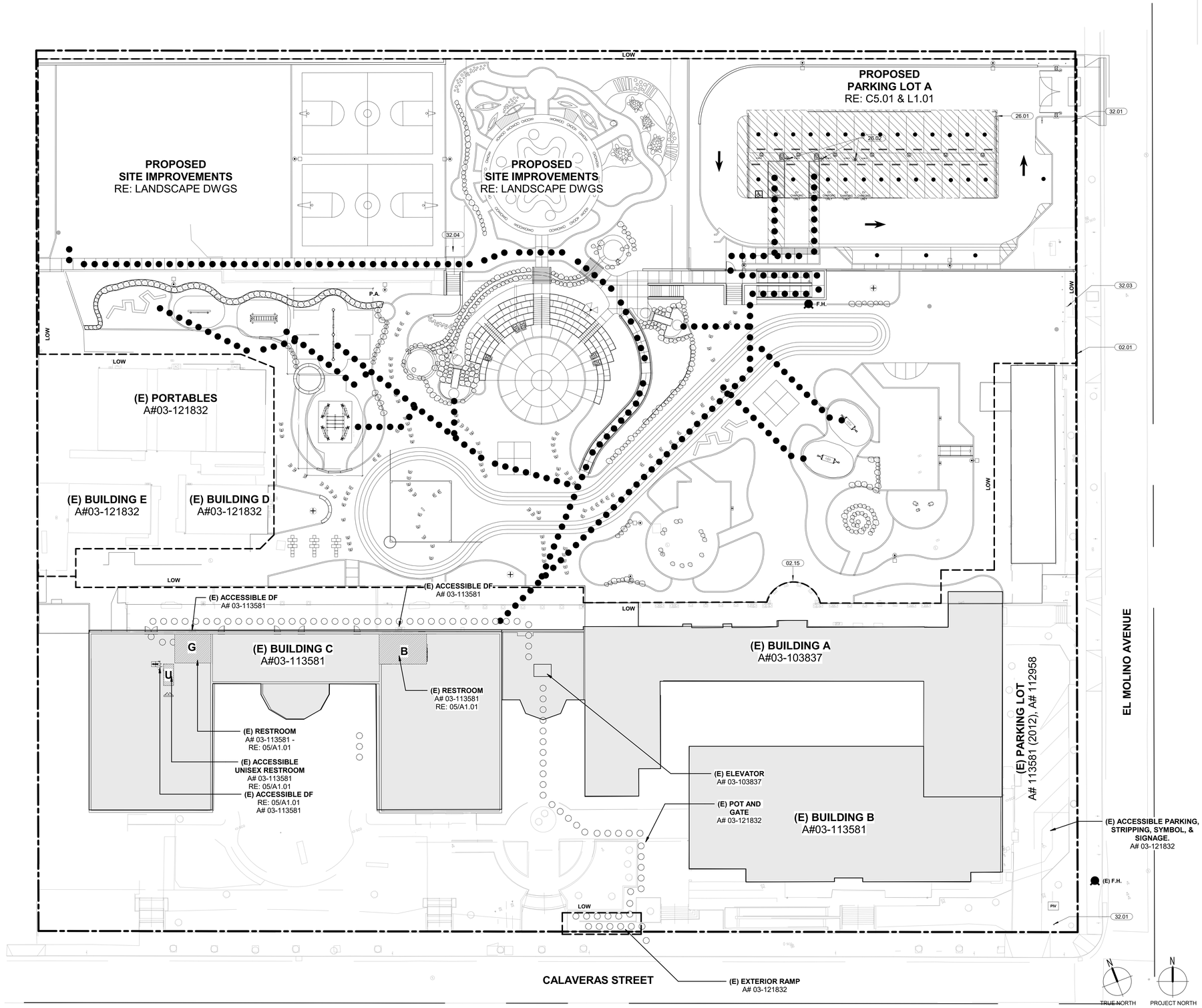

SITE ACCESSIBILITY PLAN | 1" = 20'-0" G1.10 | 05

KEYNOTES

02.01	(E) GATE WITH EMERGENCY KEY KNOX BOX FOR GATE TO BE ACCESSIBLE BY FIRE DEPARTMENT.
02.15	EXCAVATE EXISTING WALL AND FOOTING IN ORDER TO EXAMINE AND REPLACE EXISTING FAILED WATERPROOFING. REMOVE EXISTING WATERPROOFING AND INSTALL NEW WATERPROOFING AS REQUIRED FOR A CONTINUOUS MOISTURE BARRIER ON THE EXTERIOR SIDE OF THE BELOW GRADE WALL AND FOOTING. GRADE AND RECOMPACT SOIL PER CIVIL
26.01	(N) PV CANOPY STRUCTURE. RE: PC DWGS.
26.02	(N) EV CHARGING STATION. RE: ELECTRICAL DWGS
32.01	(N) TOW-AWAY SIGNAGE PROVIDED, RE: CIVIL DWGS
32.03	(N) FIRE LANE ENTRANCE SIGN PER 08/G1.20.
32.04	(N) DRINKING FOUNTAIN, RE: LANDSCAPE DWGS

LEGEND

- EXISTING BUILDING UNDER PROJECT SCOPE OF WORK
- HATCH INDICATES RESTROOM OUTLINES (M) MEN, (W) WOMEN, (B) BOYS, (G) GIRLS, (U) UNISEX, RE:A101
- PROPOSED PARKING PV CANOPY. SEE PC DRAWINGS FOR STRUCTURE AND PV PANEL INFORMATION. SEE ELECTRICAL DRAWINGS FOR LIGHTING & POWER
- OCCUPANCY CLASSIFICATION:
  - CARPORT (CBC 406.3.3)
  - U (UTILITY & MISCELLANEOUS)
  - NON OCCUPIED
  - NON - SPRINKLERED
- EXISTING BUILDING OUTSIDE OF PROJECT SCOPE OF WORK
- EXISTING ACCESSIBLE PATH OF TRAVEL A# 03-113581
- ACCESSIBLE PATH OF TRAVEL (P.O.T.) PATH OF TRAVEL (P.O.T.) AS INDICATED IS A BARRIER FREE ACCESS ROUTE WITHOUT ANY ABRUPT VERTICAL CHANGES EXCEEDING 1/2" BEVELED @1:2 MAXIMUM SLOPE; EXCEPT THAT LEVEL CHANGES DO NOT EXCEED 1/4" VERTICAL & IS AT LEAST 48" WIDE; SURFACE IS SLIP RESISTANT, STABLE, FIRM & SMOOTH; CROSS-SLOPE DOES NOT EXCEED 2% & SLOPE IN THE DIRECTION OF TRAVEL IS LESS THAN 5% UNLESS OTHERWISE INDICATED; (P.O.T) SHALL MAINTAIN FREE OF OVERHANGING OBSTRUCTIONS TO 80" MINIMUM AND FREE OF OBJECTS PROTRUDING MORE THAN 4" FROM THE WALL. ABOVE 27" AND LESS THAN 80" ABOVE THE FLOOR. ARCHITECT SHALL VERIFY THAT THERE ARE NO BARRIERS IN THE PATH OF TRAVEL(11B-307-4).
- P.A. — PLANTING AREA
- LOW — LIMIT OF WORK (U.N.O.)
- PROPERTY LINE
- S-##-X — SIGNAGE TAG, RE: SIGNAGE SCHEDULE FOR MORE INFORMATION
- (E) F.H. — EXISTING FIRE HYDRANT
- F.H. — NEW FIRE HYDRANT, RE: 01/C3.01 & 07/C7.02

GENERAL NOTES

1. EXTERIOR WALL DIMENSIONS ARE TO FACE OF FINISH, U.N.O. INTERIOR WALL DIMENSIONS ARE TO FACE OF FINISH UNLESS IT IS LOCATED ON GRID LINE OR U.N.O. IF IT IS LOCATED ON A GRIDE LINE, INTERIOR WALL DIMENSIONS ARE TO CENTER OF WALL, DOORS ARE DIMENSIONED FROM ROUGH OPENING, U.N.O.
2. PATCH ALL SURFACES AND PROVIDE FINISH TO MATCH ADJACENT AS REQUIRED FOR ALL DEMOLITOIN AND INSTALLATION WORK. IN CASE OF WALL PANEL REPLACEMENT ENTIRE MASONITE OR DRYWALL PANEL IS TO BE REPLACED.
3. ALL FIRE EXTINGUISHERS SHALL BE FM APPROVED & SHALL BEAR THE FM SEAL OF APPROVAL.
4. CONTRACTOR TO FIELD VERIFY ALL EXISTING CONDTIONS AND REPORT ALL DISCREPANCIES TO THE ARCHITECT.
5. ALL WALLS EXPOSED CEILING, TRUSSES, AND STRUCTURAL ELEMENTS TO BE PAINTED P1, U.N.O. PROVIDE NEW WALL BASE B1.
6. ALL (E) WALL GRAPHICS TO REMAIN AND BE PROTECTED IN PLACE.
7. FIRE PROTECTION DURING DEMOLITION AND CONSTRUCTION SHALL BE IN ACCORDANCE TO 2025 CBC AND CFC.

DESIGN PROFESSIONAL IN GENERAL RESPONSIBLE IN CHARGE STATEMENT

THE PATH OF TRAVEL (P.O.T.) IDENTIFIED IN THESE CONSTRUCTION DOCUMENTS MEETS THE REQUIREMENTS OF THE CURRENT APPLICABLE CALIFORNIA BUILDING CODE (CBC ACCESSIBILITY PROVISIONS FOR PATH OF TRAVEL REQUIREMENTS FOR ALTERATIONS, ADDITIONS, AND STRUCTURAL REPAIRS. AS PART OF THE DESIGN OF THIS PROJECT, THE P.O.T. WAS EXAMINED AND ANY ELEMENTS, COMPONENTS, OR PORTIONS OF THE P.O.T. THAT WERE DETERMINED TO BE NONCOMPLIANT HAVE BEEN INCLUDED WITHIN THE SCOPE OF THIS PROJECT'S WORK THROUGH DETAILS, DRAWINGS, AND SPECIFICATIONS INCORPORATED INTO THESE CONSTRUCTION DOCUMENTS. ANY NONCOMPLIANT ELEMENTS, COMPONENTS, OR PORTIONS OF THE P.O.T. THAT WILL NOT BE CORRECTED BY THIS PROJECT BASED ON VALUATION THRESHOLD LIMITATIONS OR A FINDING OF UNREASONABLE HARDSHIP ARE INDICATED IN THESE CONSTRUCTION DOCUMENTS.

DURING CONSTRUCTION, IF P.O.T. ITEMS WITHIN THE SCOPE OF THE PROJECT PRESENTED AS CBC COMPLIANT ARE FOUND TO BE NON-CONFORMING BEYOND REASONABLE CONSTRUCTION TOLERANCES, THE ITEMS SHALL BE BROUGHT INTO COMPLIANCE WITH THE CBC AS PART OF THIS PROJECT BY MEANS OF A CONSTRUCTION CHANGE DOCUMENT.

LPA
ARCHITECTURE ENGINEERING INTERIOR DESIGN
LANDSCAPE ARCHITECTURE PLANNING
949-261-1001 Office
LPADesignStudios.com
5301 California Avenue, Suite 100
Irvine, California 92617
LICENSED ARCHITECT NICOLE MEYER C30830 9/30/2027 REGISTERED PROFESSIONAL ARCHITECT STATE OF CALIFORNIA

This document and all other project documents, ideas, aesthetics and designs incorporated therein are instruments of service. All project documents are copyright protected, are the property of LPA, Inc. (LPA) and cannot be lawfully used in whole or in part for any project or purpose except as set forth in the contractual agreement between LPA and its Client. The unauthorized disclosure and/or use of the project documents (including the creation of derivative works), may give rise to liability for copyright infringement, unlawful disclosure, use or misappropriation of property rights held by LPA. The unauthorized use of the project documents will give rise to the recovery of monetary losses and damages including attorney fees and costs for which the unauthorized user will be held liable.
Project documents describe the design intent of the work and are not a representation of as-built or existing conditions. LPA is not responsible for any discrepancies between the project documents and the existing conditions.

© LPA, Inc.

ALTADENA ARTS MAGNET SCHOOL

743 E. CALAVERA ST,
ALTADENA CA 91001

Developed for
PASADENA UNIFIED SCHOOL DISTRICT

Revision	Date

Submittal	Date
DSA SUBMITTAL	02/02/2026
DSA SUBMITTAL V2	03/13/2026

Job Number	33366
Checked By	Checker
Scale	As indicated

SITE ACCESSIBILITY PLAN

G1.10

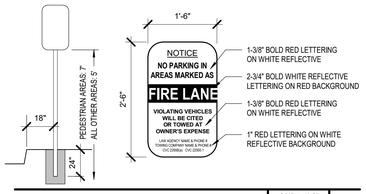

FIRE LANE SIGNAGE | 3/4" = 1'-0" | G1.20 | 08

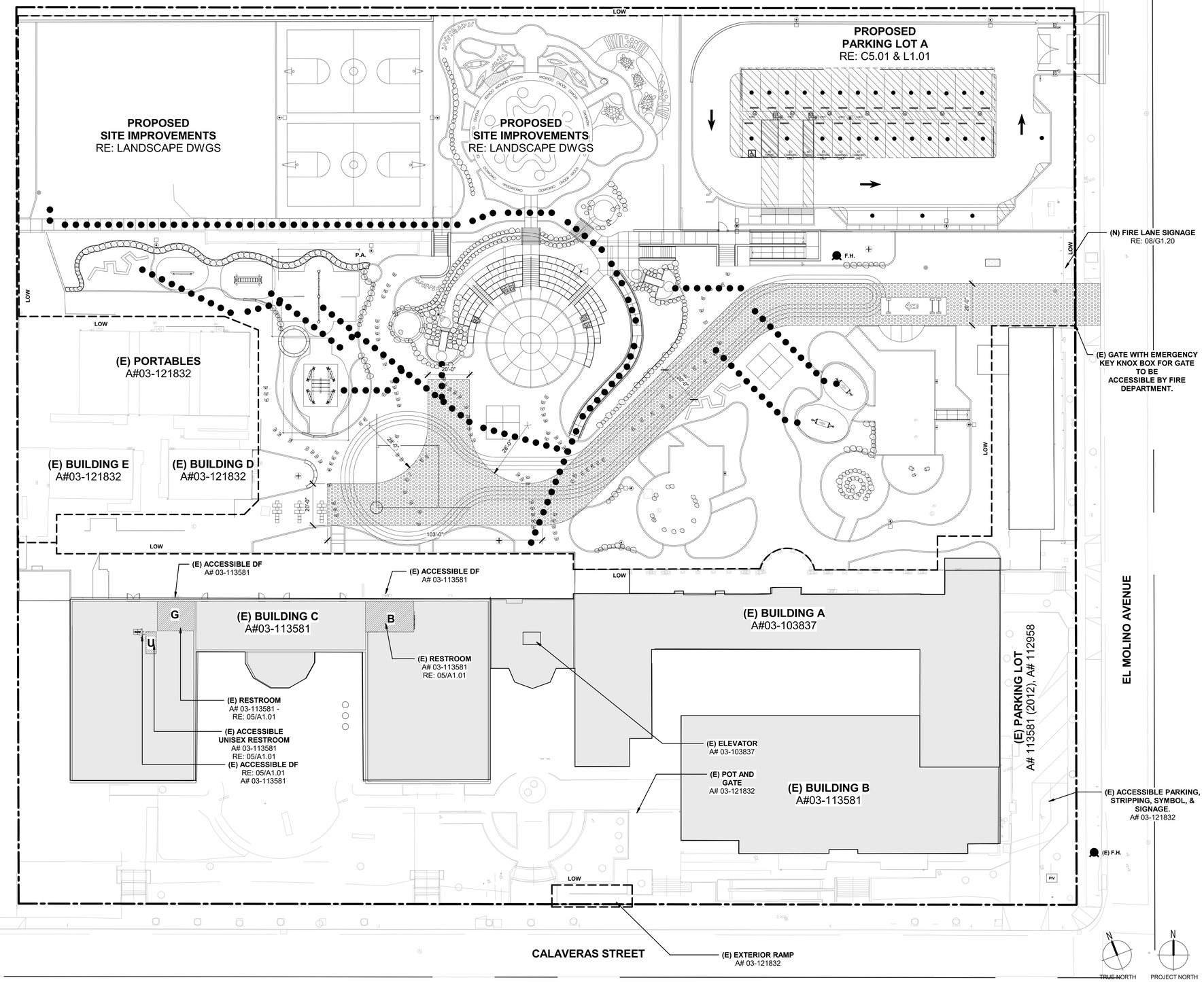

00 - SITE ACCESSIBILITY PLAN Copy 2 | 1" = 20'-0" | G1.20 | 05

DSA 810

FIRE & LIFE SAFETY SITE CONDITIONS SUBMITTAL

Division of the State Architect (DSA) documents referenced within this publication are available on the DSA Forms or DSA Publications webpages.

To facilitate the Division of the State Architect's (DSA) fire and life safety plan review of project site conditions, DSA requires the design professional to provide the following information at time of project submittal for projects consisting of construction of a new campus, construction of new building(s), additions to existing buildings, and for site alternate design means for fire department emergency vehicle access, and fire suppression water supply.

Information associated with compliance items 1 through 3 below is to be provided for all project types indicated above. Information associated with items 4 through 7 is to be completed when an alternate means is utilized. Acknowledgement by the school district and signature from the Local Fire Authority (LFA) is only required when an alternate design means is being requested.

The Project Information and Fire & Life Safety Information sections are to be completed for all projects and imaged onto the fire access site plan. When an alternate design/means is proposed, all sections on pages 1 and 2 are to be completed and imaged on the fire access site plan.

For additional information refer to the instructions at the end of this form and DSA Policy *PL 09-01: Fire Flow for Buildings*.

PROJECT INFORMATION	
School District/Owner:	PASADENA UNIFIED SCHOOL DISTRICT
Project Name/School:	ALTADENA ELEMENTARY SCHOOL
Project Address:	743 E. CALAVERAS ST, ALTADENA, CA 91001

FIRE & LIFE SAFETY INFORMATION				
1.	Has a fire hydrant flow test been performed within the past 12 months? *(If yes, provide a copy of the test data.)*	Yes ☐		No ☒
2.	Was the fire hydrant water flow test performed as part of this LFA review?	Yes ☒		No ☐
3.	Is the project located within a designated fire hazard severity zone (FHSZ) as established by Cal-Fire? *(If yes, indicate FHSZ classification below.)*	Yes ☐		No ☒
	Refer to the following website for FHSZ locations: http://egis.fire.ca.gov/FHSZ/	Moderate ☐	High ☐	Very High ☐
	Wildland Interface Area (WIFA) *(If any designations are checked, project design must meet the requirements of CBC Chapter 7A.)*			WIFA ☐

LEGEND

- EXISTING BUILDING PART OF SCOPE OF WORK
- PROPOSED PARKING PV CANOPY. SEE PC DRAWINGS FOR STRUCTURE AND PV PANEL INFORMATION. SEE ELECTRICAL DRAWINGS FOR LIGHTING & POWER

OCCUPANCY CLASSIFICATION:

CARPORT (CBC 406.3.3)
U (UTILITY & MISCELLANEOUS)
NON OCCUPIED
NON - SPRINKLERED

- EXISTING BUILDING OUTSIDE OF PROJECT SCOPE OF WORK
- FIRE ACCESS LANE, 20'-0"W U.N.O., 20'-0" MIN. INSIDE RADIUS U.N.O.
- (E) F.H. — EXISTING FIRE HYDRANT
- F.H. — NEW FIRE HYDRANT
- P.A. — PLANTING AREA
- 150'-0" MAX. LENGTH HOSE PULL
- 180'-0" MAX. LENGTH HOSE PULL FROM HYDRANT TO TRUCK
- PROPERTY LINE
- LOW — LIMIT OF WORK (U.N.O.)
- ASSUMED PROPERTY LINE
- FIRE TRUCK
- PIV — EXISTING POST-INDICATOR VALVE, RE: CIVIL UTILITY PLAN, C3.01, FOR ADDITIONAL INFORMATION

FIRE FLOW & HYDRANT ANALYSIS

REQUIRED FIRE FLOW AND DURATION FOR TYPE VB CONSTRUCTIONH = 1,500 GPM FOR 2 HRS. (PER CFC TABLE CC105.1).
NUMBER AND DISTRIBUTION OF FIRE HYDRANTS FOR 1,500 GPM
NUMBER OF REQUIRED HYDRANTS = (1) WITH 500 FEET MAXIMUM DISTANCE
MAXIMUM DISTANCE TO ANY POINT OF STRUCTURE = 250 FEET

NUMBER OF (E) HYDRANTS = 1

NUMBER OF (N) HYDRANTS = 1

GENERAL NOTES

1. ALL VEGETATION AND OTHER OBSTRUCTIONS OVERHANGING A FIRE ACCESS ROADWAY SHALL BE MAINTAINED TO A CLEAR HEIGHT OF 13'-6".
2. ALL POLES, BACKBOARDS, AND OTHER OBSTRUCTIONS ON PLAYGROUNDS NEAR A FIRE ACCESS ROADWAY SHALL BE PROVIDED WITH REFLECTIVE TAPE OR PAINT.
3. THE CAMPUS IS IDENTIFIED WITH 6' HIGH ADDRESS NUMBERS EASILY VISIBLE FROM THE PUBLIC ROAD FRONTING THE PROPERTY. INDIVIDUAL STRUCTURES ARE IDENTIFIED WITH 6" HIGH ADDRESS NUMBERS OR LETTERS EASILY VISIBLE FROM THE PUBLIC WAY OR FIRE ACCESS ROADWAY.
4. PIVs, DDCVs, FDCs, SHALL BE UNOBSTRUCTED AND VISIBLE FROM THE FIRE LANE OR PUBLIC ROAD. THEY SHALL BE PAINTED OSHA SAFETY RED.
5. VEHICULAR ACCESS MUST BE MAINTAINED SERVICEABLE THROUGHOUT CONSTRUCTION.
6. POST "NO PARKING" SIGNS ALONG FIRE VEHICULAR ACCESS ROAD(S) PER FIRE CODE 10.206, SEE SHEET G0.10.
7. A KNOX BOX SHALL BE PROVIDED AT ALL NEW FIRE ACCESS GATES WITH KEYS FOR ALL GATES. ALL FIRE ACCESS VEHICULAR GATES SHALL BE A MINIMUM OF 20'-0" WIDE.
8. PER 2025 CALIFORNIA FIRE CODE, SECTION 503: FIRE APPARATUS ACCESS ROADS SHALL BE PROVIDED FOR EVERY FACILITY, BUILDING, OR PORTION OF A BUILDING HEREAFTER CONSTRUCTED OR MOVED INTO OR WITHIN THE JURISDICTION WHEN ANY PORTION OF THE FACILITY OF ANY PORTION OF AN EXTERIOR WALL OF THE FIRST STORY OF THE BUILDING IS LOCATED MORE THAN 150'-0" FROM FIRE APPARATUS ACCESS AS MEASURED BY AN APPROVED ROUTE AROUND THE EXTERIOR OF THE BUILDING OR FACILITY.
9. PER 2025 CALIFORNIA FIRE CODE, SECTION 503: FIRE APPARATUS ACCESS ROADS SHALL BE AN UNOBSTRUCTED WIDTH OF NOT LESS THAN 20'-0" (VEHICULAR ACCESS TO WITHIN/IN 150' OF ALL PORTIONS OF THE BUILDING EXTERIOR WALLS, FIRE CODE 10.204 (A) AND AN UNOBSTRUCTED VERTICAL CLEARANCE OF NOT LESS THAN 13'-6"). FIRE APPARATUS ACCESS ROADS SHALL BE DESIGNED AND MAINTAINED TO SUPPORT AN 75,000 POUND LOAD / 25,000 POUND POINT LOAD AND BE PROVIDED WITH A SURFACE SO AS TO PROVIDE ALL WEATHER DRIVING CAPABILITIES. ROADWAYS SHALL HAVE A MINIMUM 20'-0" INSIDE TURNING RADIUS. DEAD END ACCESS ROADS SHALL NOT EXCEED 150'-0" IN LENGTH.

LPA
ARCHITECTURE ENGINEERING INTERIOR DESIGN
LANDSCAPE ARCHITECTURE PLANNING
949-261-1001 Office
LPADesignStudios.com
5301 California Avenue, Suite 100
Irvine, California 92617

LICENSED ARCHITECT — NICOLE MEYER — C30830 — 9/30/2027 — REGISTERED DATE — STATE OF CALIFORNIA

This document and all other project documents, ideas, aesthetics and designs incorporated therein are instruments of service. All project documents are copyright protected, are the property of LPA, Inc. (LPA) and cannot be lawfully used in whole or in part for any project or purpose except as set forth in the contractual agreement between LPA and its Client. The unauthorized disclosure and/or use of the project documents (including the creation of derivative works), may give rise to liability for copyright infringement, unlawful disclosure, use or misappropriation of property rights held by LPA. The unauthorized use of the project documents will give rise to the recovery of monetary losses and damages including attorney fees and costs for which the unauthorized user will be held liable.
Project documents describe the design intent of the work and are not a representation of as-built or existing conditions. LPA is not responsible for any discrepancies between the project documents and the existing conditions.

© LPA, Inc.

ALTADENA ARTS MAGNET SCHOOL

743 E. CALAVERA ST,
ALTADENA CA 91001

Developed for
PASADENA UNIFIED SCHOOL DISTRICT

Revision	Date

Submittal	Date
DSA SUBMITTAL	02/02/2026
DSA SUBMITTAL V2	03/13/2026

Job Number	33366
Checked By	Checker
Scale	As indicated

SITE FIRE ACCESS PLAN

G1.20

ABBREVIATIONS

AB	AGGREGATE BASE	MIN	MINIMUM
AC	ASPHALT CONCRETE PAVEMENT	MOC	MIDDLE OF CURVATURE
AE	ACCESS EASEMENT	N	NORTH
ASPH	ASPHALT PAVING	NG	NATURAL GRADE
BC	BEGIN CURVATURE	NTS	NOT TO SCALE
BCR	BEGIN CURB RETURN	OC	ON CENTER
BFP	BACK FLOW PREVENTER	(P)	PROPOSED, NEW
BI	BOX INLET	PA	PLANTING AREA
BM	BENCHMARK	PBC	PULL BOX CABLE
BOP	BOTTOM OF PIPE	PBE	PULL BOX ELECTRIC
BOR	BOTTOM OF RAMP	PBT	PULL BOX TELEPHONE
BS	BOTTOM OF STAIRS	PBW	PULL BOX WATER
BVC	BEGIN VERTICAL CURVATURE	PCC	POINT OF COMPOUND CURVATURE
BW	BOTTOM OF WALL	PE	PEDESTRIAN EASEMENT
C&G	CURB AND GUTTER	PI	POINT OF INTERSECTION
C/L,CL	CENTER LINE	PIVC	POINT OF INTERSECTION VERTICAL CURVATURE
CB	CATCH BASIN		
CONST	CONSTRUCT	PL	PROPERTY LINE
CR	CURB RETURN	POC	POINT OF CONNECTION
CT	COURT	PP	POWER POLE
CUL	CULVERT	PRC	POINT OF REVERSE CURVATURE
DI	DROP INLET	PVC	POLYVINYL CHLORIDE
DIP	DUCTILE IRON PIPE	PVMT	PAVEMENT
DW	DOMESTIC WATER	R	RADIUS
D/W	DRIVEWAY	RCP	REINFORCED CONCRETE PIPE
DE	DRAINAGE EASEMENT	RIM	TOP RIM OF STRUCTURE
DR	DRIVE	ROW	HIGHWAY EASEMENT
(E)	EXISTING	RT	RIGHT
E	EAST	RW	RECLAIMED WATER
EC	END CURVATURE	R/W	RIGHT OF WAY
ECR	END CURB RETURN	S	SOUTH OR SLOPE
EG	EXISTING GRADE	SBE	SETBACK EASEMENT
ELEV	ELEVATION	SCO	SANITARY SEWER CLEANOUT
EOC	EDGE OF CONCRETE	SD	STORM DRAIN
EP	EDGE OF PAVEMENT	SDMH	STORM DRAIN MANHOLE
EQ	EQUAL	SF	SQUARE FEET
ESMT	EASEMENT	SHT	SHEET
EVC	END OF VERTICAL CURVATURE	STA	STATION
FF	FINISHED FLOOR	SMH	SANITARY SEWER MANHOLE
FFE	FINISHED FLOOR ELEVATION	SS	SANITARY SEWER
FG	FINISHED GRADE	SWPPP	STORM WATER POLLUTION PREVENTION PLAN
FH	FIRE HYDRANT		
FL	FLOWLINE	S/W	SIDEWALK
FS	FINISHED SURFACE	T	TANGENT
FW	FIRE PROTECTION SERVICE WATER	TB	TOP OF BERM
GB	GRADE BREAK	TBC	TOP BACK OF CURB
GFL	GUTTER FLOWLINE	TBW	TOP BACK OF WALK
GSL	LIMITS OF GRAVITY SEWER	TC	TOP OF CURB
GR	GRATE	TF	TOP OF FOOTING
GV	GAS VALVE	TG	TOP OF GRATE
HB	HOSE BIB	TOE	TOE OF SLOPE
HP	HIGH POINT	TOP	TOP OF PIPE
ICV	IRRIGATION CONTROL VALVE	TOR	TOP OF RAMP
INTX	POINT OF INTERSECTION	TOS	TOP OF SLOPE
INV	INVERT	TP	TOP OF PLANTER
JP	JOINT POLE	TS	TOP OF STAIRS
LE	LANDSCAPE EASEMENT	TW	TOP OF WALL
LF	LINEAR FEET	TYP	TYPICAL
LIP	LIP OF GUTTER	TP	TELEPHONE POLE
LP	LOW POINT	VC	VERTICAL CURVATURE
LT	LEFT	W	WEST
MAX	MAXIMUM	WM	WATER MAIN
MH	MANHOLE	WV	WATER VALVE

LEGEND

SYMBOL	DESCRIPTION
(RD)	ROOF DRAIN POC 5' FROM BUILDING
(G)	GAS POC 5' FROM BUILDING
(F)	FIRE WATER POC 5' FROM BUILDING
(W)	DOMESTIC WATER POC 5' FROM BUILDING
(SS)	SANITARY SEWER POC 5' FROM BUILDING
(D)	STORM DRAIN MANHOLE
(S)	SANITARY SEWER MANHOLE
	DRAIN INLET
AD	AREA DRAIN
	TRENCH DRAIN
	CLEANOUT
	BLOW OFF
	FIRE HYDRANT
	VALVE
	POST INDICATOR VALVE (PIV)/CHECK VALVE (CHK VLV)/FIRE DEPARTMENT CONNECTION (FDC)
	CHECK VALVE (CHK VLV)
	FIRE DEPARTMENT CONNECTION (FDC)
	DOUBLE DETECTOR CHECK (DBL CHK)
	REDUCED PRESSURE (BFP)
	POST INDICATOR VALVE (PIV)
	THRUST BLOCK
	BENDS, TEE AND CROSS
M	WATER METER

LINE TYPE	DESCRIPTION
	APPROXIMATE PROJECT LIMITS
	RIGHT OF WAY/ PROPERTY LINE
	FENCE
	REMOVE EXISTING UTILITY
SS	EXISTING SEWER LINE
W	EXISTING WATER LINE
SD	EXISTING STORM DRAIN LINE
FW	EXISTING DEDICATED PRIVATE FIRE SERVICE
G	EXISTING NATURAL GAS SERVICE
E	EXISTING ELECTRICAL LINE / CONDUIT
T	EXISTING TELECOMMUNICATIONS LINE / CONDUIT
XXLF 6"SS S=X.XXX	SANITARY SEWER LINE
XXLF 6"DW PVC	DOMESTIC WATER LINE
XXLF 6"SD S=X.XXX	STORM DRAIN LINE (≤8" DIAMETER)
XXLF 12"SD S=X.XXX	STORM DRAIN LINE (>8" DIAMETER)
	PERFORATED STORM DRAIN LINE
XXLF 8"FW PVC	DEDICATED PRIVATE FIRE SERVICE
XXLF GAS PVC	NATURAL GAS LINE
GB	GRADE BREAK LINE
>	FLOW LINE
//	DAYLIGHT LINE

GENERAL EROSION AND SEDIMENT CONTROL NOTES

1. CONTRACTOR SHALL ENSURE THAT THE CONSTRUCTION SITE IS PREPARED PRIOR TO THE START OF CONSTRUCTION. CONTRACTOR SHALL HAVE ALL EROSION AND SEDIMENT CONTROL MEASURES IN PLACE AT ALL TIMES DURING CONSTRUCTION.
2. ALL EROSION AND SEDIMENT CONTROL MEASURES SHALL BE MAINTAINED UNTIL DISTURBED AREAS ARE STABILIZED.
3. THIS PLAN MAY NOT COVER ALL THE SITUATIONS THAT ARISE DURING CONSTRUCTION DUE TO UNANTICIPATED FIELD CONDITIONS.
4. ALL EROSION AND SEDIMENT CONTROL MEASURES SHALL BE CHECKED BEFORE AND AFTER ALL STORMS TO ENSURE MEASURES ARE FUNCTIONING PROPERLY.
5. CONTRACTOR SHALL MAINTAIN A LOG AT THE SITE OF ALL INSPECTIONS OR MAINTENANCE OF BMPS, AS WELL AS, ANY CORRECTIVE CHANGES TO THE BMPS OR EROSION AND SEDIMENT CONTROL PLAN.
6. IN AREAS WHERE SOIL IS EXPOSED, PROMPT REPLANTING WITH NATIVE COMPATIBLE, DROUGHT-RESISTANT VEGETATION SHALL BE PERFORMED. NO AREAS WILL BE LEFT EXPOSED OVER THE WINTER SEASON.
7. THE CONTRACTOR SHALL INSTALL THE STABILIZED CONSTRUCTION ENTRANCE PRIOR TO COMMENCEMENT OF GRADING. LOCATION OF THE ENTRANCE MAY BE ADJUSTED BY THE CONTRACTOR TO FACILITATE GRADING OPERATIONS. ALL CONSTRUCTION TRAFFIC ENTERING THE PAVED ROAD MUST CROSS THE STABILIZED CONSTRUCTION ENTRANCE.
8. ALL SEDIMENT DEPOSITED ON PAVED ROADWAYS SHALL BE SWEPT AT THE END OF EACH WORKING DAY OR MORE OFTEN AS NECESSARY.
9. CONTRACTOR SHALL PLACE GRAVEL/SAND BAGS AROUND ALL NEW DRAINAGE STRUCTURE OPENINGS IMMEDIATELY AFTER THE STRUCTURE OPENING IS CONSTRUCTED. THESE GRAVEL/SAND BAGS SHALL BE MAINTAINED AND REMAIN IN PLACE UNTIL CONSTRUCTION IS COMPLETED.
10. CONTRACTOR SHALL IMPLEMENT HOUSEKEEPING PRACTICES AS FOLLOWS:
    - A. SOLID WASTE MANAGEMENT: PROVIDE DESIGNATED WASTE COLLECTION AREAS AND CONTAINERS. ARRANGE FOR REGULAR REMOVAL AND DISPOSAL. CLEAR SITE OF TRASH INCLUDING ORGANIC DEBRIS, PACKAGING MATERIALS, SCRAP OR SURPLUS BUILDING MATERIALS AND DOMESTIC WASTE DAILY.
    - B. MATERIAL DELIVERY AND STORAGE: PROVIDE A DESIGNATED MATERIAL STORAGE AREA WITH SECONDARY CONTAINMENT SUCH AS BERMING. STORE MATERIAL ON PALLETS AND PROVIDE COVERING FOR SOLUBLE MATERIALS. RELOCATE STORAGE AREA INTO BUILDING SHELL WHEN POSSIBLE. INSPECT AREA WEEKLY.
    - C. CONCRETE WASTE: PROVIDE A DESIGNATED AREA FOR A TEMPORARY PIT TO BE USED FOR CONCRETE TRUCK WASH-OUT. CONCRETE WASHOUT CANNOT BE WITHIN 50' MINIMUM OF DRAIN INLETS. DISPOSE OF HARDENED CONCRETE OFFSITE. AT NO TIME SHALL A CONCRETE TRUCK DUMP ITS WASTE AND CLEAN ITS TRUCK INTO THE STORM DRAINS VIA CURB AND GUTTER. INSPECT DAILY TO CONTROL RUNOFF, AND WEEKLY FOR REMOVAL OF HARDENED CONCRETE.
    - D. PAINT AND PAINTING SUPPLIES: PROVIDE INSTRUCTION TO EMPLOYEES AND SUBCONTRACTORS REGARDING REDUCTION OF POLLUTANTS INCLUDING MATERIAL STORAGE, USE, AND CLEAN UP. INSPECT SITE WEEKLY FOR EVIDENCE OF IMPROPER DISPOSAL.
    - E. VEHICLE FUELING, MAINTENANCE AND CLEANING: PROVIDE A DESIGNATED FUELING AREA WITH SECONDARY CONTAINMENT SUCH AS BERMING. DO NOT ALLOW MOBILE FUELING OF EQUIPMENT. PROVIDE EQUIPMENT WITH DRIP PANS. RESTRICT ONSITE MAINTENANCE AND CLEANING OF EQUIPMENT TO A MINIMUM. INSPECT AREA WEEKLY.
    - F. HAZARDOUS WASTE MANAGEMENT: PREVENT THE DISCHARGE OF POLLUTANTS FROM HAZARDOUS WASTES TO THE DRAINAGE SYSTEM THROUGH PROPER MATERIAL USE, WASTE DISPOSAL AND TRAINING OF EMPLOYEES. HAZARDOUS WASTE PRODUCTS COMMONLY FOUND ON-SITE INCLUDE BUT ARE NOT LIMITED TO PAINTS & SOLVENTS, PETROLEUM PRODUCTS, FERTILIZERS, HERBICIDES & PESTICIDES, SOIL STABILIZERS, STABILIZATION PRODUCTS, ASPHALT PRODUCTS AND CONCRETE CURING PRODUCTS.
11. CONTRACTOR SHALL HYDROSEED ALL GRADED SLOPES. NATIVE SEED MIX SHALL BE 20% LANA PUBESCENT WHEAT GRASS, 40% BLANDO BROME, AND 40% ANNUAL RYE GRASS AND SHALL BE APPLIED AT A RATE OF 200 POUNDS PER ACRE. SOIL BINDING AGENT SHALL BE VERDYOL, SENTINEL, OR EQUAL, APPLIED AT A RATE OF 110 POUNDS PER ACRE. MULCH SHALL BE SILVER-FIBER, CONWED, OR EQUAL, APPLIED AT A RATE OF 1,000 POUNDS PER ACRE. FERTILIZER SHALL BE AGRI-FORM 16-7-12, BEST 16-6-8, OR EQUAL, APPLIED AT A RATE OF 500 POUNDS PER ACRE. THE CONTRACTOR SHALL WATER SEEDED AREAS OR RESEED AS NECESSARY TO ENSURE SUFFICIENT PLANT DEVELOPMENT FOR EROSION CONTROL.
12. NO GRADING SHALL BE DONE UNTIL SITE- AND SEASON-SPECIFIC SOIL LOSS AND HOUSEKEEPING STORMWATER BMPs HAVE BEEN APPROVED BY THE INSPECTOR. THE CONTRACTOR SHOULD EMPLOY THE DESIGN BMPs AND ANY OTHERS NEEDED AS SITUATIONS ARISE. CONTRACTOR SHOULD CONDUCT SITE INSPECTIONS BEFORE, DURING AND AFTER EACH EXTENDED STORM EVENT TO IDENTIFY CONDITIONS THAT MAY CONTRIBUTE TO EROSION AND SEDIMENT PROBLEMS OR ANY OTHER POLLUTANT DISCHARGES. IF ADDITIONAL CONTROL MEASURES ARE NEEDED, CONTRACTOR SHOULD IMPLEMENT THEM IMMEDIATELY.

POLLUTION PREVENTION NOTES

IN ORDER TO MEET THE REQUIREMENTS OF THE NATIONAL POLLUTANT DISCHARGE ELIMINATION SYSTEM (NPDES) PROGRAM FOR CONSTRUCTION, CONSTRUCTION CONTRACTORS SHALL INSTALL AND MAINTAIN APPROPRIATE BEST MANAGEMENT PRACTICES (BMPS), AS SHOWN IN THE EROSION CONTROL PLAN AND IN ACCORDANCE WITH THE SWPPP (STORM WATER POLLUTION PREVENTION PLAN), ON ALL CONSTRUCTION PROJECTS. BMPS SHALL BE INSTALLED IN ACCORDANCE WITH INDUSTRY RECOMMENDED STANDARDS, AND/OR IN ACCORDANCE WITH ANY GENERAL CONSTRUCTION PERMIT ISSUED BY THE STATE FOR THE PROJECT TO PREVENT ANY DISCHARGES FROM THE PROJECT SITE OR INTO ANY STORM DRAIN FACILITIES. ALL SEDIMENTS, CONSTRUCTION MATERIALS, DEBRIS AND WASTES, AND OTHER POLLUTANTS MUST BE RETAINED ON SITE AND MAY NOT BE TRANSPORTED FROM THE SITE VIA SHEET FLOW, SWALES, AREA DRAINS, NATURAL DRAINAGE COURSES, WIND, OR VEHICLE TRACKING. UNDER DIRECTION OF THE ENGINEER OF RECORD, EROSION AND/OR SEDIMENT CONTROL DEVICES SHALL BE MODIFIED AS NEEDED AS THE PROJECT PROGRESSES TO ENSURE EFFECTIVENESS.

BMP MAINTENANCE NOTES

1. FOLLOWING OWNER ACCEPTANCE OF CONSTRUCTION WORK, POST CONSTRUCTION BEST MANAGEMENT PRACTICE (BMP) MEASURES SHALL BE MAINTAINED BY THE PROPERTY OWNER, INCLUDING BUT NOT LIMITED TO:
   - 1.1. ANNUAL INSPECTION, REPLACEMENT, AND/OR SEDIMENTATION REMOVAL OF VEGETATED SWALES, TREATMENT PONDS, AND OTHER SURFACE STORMWATER TREATMENT MEASURES AS REQUIRED WITH AN INCREASED FREQUENCY BASED ON SITE CONDITIONS.
   - 1.2. MAINTENANCE SERVICE AGREEMENT(S) OF STORMWATER TREATMENT VAULTS, INLETS, MANHOLES, AND OTHER DEVICES BASED ON MANUFACTURES' RECOMMENDATIONS AND FREQUENCY.
   - 1.3. ANNUAL INSPECTION OF PERMEABLE PAVEMENT AND REMOVAL OF SEDIMENT AS NEEDED.
   - 1.4. ANNUAL INSPECTION OF STORMWATER INLETS AND MAINTENANCE AS REQUIRED TO CLEAR GRATES AND INLETS OF DEBRIS.
   - 1.5. THE PROJECT STORMWATER POLLUTION PREVENTION PLAN (SWPPP) AND WATER QUALITY MANAGEMENT PLAN (WQMP) MAY CONTAIN ADDITIONAL OR MORE STRINGENT MAINTENANCE REQUIREMENTS.
2. BMP DETAILS MAY BE FOUND IN APPENDIX H OF THE PROJECT SWPPP DOCUMENT. BMP DETAILS PER CALIFORNIA STORMWATER QUALITY ASSOCIATION (CASQA) AND ARE AVAILABLE AT www.casqa.org.
3. FOR PROJECTS GREATER THAN 1 ACRE: THE CONTRACTOR SHALL VERIFY THE STATUS OF THE SWPPP/NOI/WDID PRIOR TO EARTHMOVING ACTIVITIES. A STORMWATER POLLUTION PREVENTION PLAN (SWPPP) SHALL BE PREPARED AND A NOTICE OF INTENT (NOI) SHALL BE FILED WITH THE STATE WATER RESOURCES CONTROL BOARD (SWRCB) IN ACCORDANCE WITH THE REQUIREMENTS OF CALIFORNIA GENERAL PERMIT FOR STORMWATER DISCHARGES ASSOCIATED WITH CONSTRUCTION ACTIVITY (PERMIT NO. CAS000002) FOR ALL OPERATIONS ASSOCIATED WITH THESE PLANS. THE CONTRACTOR SHALL KEEP A COPY OF THE SWPPP ON SITE AND AVAILABLE FOR REVIEW.

AREA SUMMARY

TOTAL DISTURBED AREA = 2.67± ACRES

DEMOLITION NOTES

1. THE INTENT OF THE DEMOLITION PLAN IS TO DESCRIBE IN GENERAL THE DEMOLITION AREAS AFFECTED BY THE PROJECT CONSTRUCTION. IT IS NOT INTENDED AS A DETAILED DESCRIPTION OF EXISTING ITEMS OR ELEMENTS TO BE REMOVED. THE CONTRACTOR SHALL VISIT THE SITE AND REVIEW ANY AVAILABLE RECORD DOCUMENTS TO BECOME FAMILIAR WITH THE EXISTING CONDITIONS AND SHOULD INCLUDE THE REMOVAL OF ALL ITEMS NECESSARY FOR THE PROPER EXECUTION AND COMPLETION OF THE WORK. THE CONTRACT DOCUMENTS ARE COMPLEMENTARY, AND WHAT IS REQUIRED BY ONE SHALL BE BINDING AS IF REQUIRED BY ALL TO THE EXTENT THAT IT IS REASONABLY INFERABLE FROM THEM AS BEING NECESSARY TO PRODUCE THE INTENDED RESULTS.
2. REMOVE EXISTING BUILDINGS, FOUNDATIONS AND SERVICE UTILITIES AS INDICATED ON PLANS. CAP ALL UTILITIES AT APPROPRIATE POINTS. ALL EXISTING ELECTRICAL / TELEPHONE / CATV UTILITIES SHALL BE REMOVED AS INDICATED OR BACK TO THE POINT WHERE THE SPECIFIC UTILITY SYSTEM ENTERS THE WORK AREA. COORDINATE DEMOLITION OF ALL UTILITIES WITH THE OWNER. ALL UTILITIES CONNECTED TO EXISTING BUILDINGS TO REMAIN SHALL CONTINUE TO BE OPERATIONAL DURING THE DEMOLITION PROCESS. DOMESTIC AND FIRE SERVICE WATER AND NATURAL GAS SHALL BE REMOVED TO A POINT OUTSIDE THE PERIMETER OF PROPOSED NEW CONSTRUCTION TO EXISTING VALVES OR SIMILAR SHUT-OFF DEVICES. IF A SHUT-OFF DEVICE IS NOT REASONABLY ADJACENT TO THE PERIMETER OF THE PROPOSED NEW CONSTRUCTION, PROVIDE A SHUT-OFF DEVICE IN BELOW-GRADE YARD BOX. CONFIRM LOCATION OF NEW DEVICES WITH OWNER PRIOR TO INSTALLATION. SANITARY SEWER AND STORM DRAINAGE SHALL BE CAPPED TO A POINT OUTSIDE THE PERIMETER OF THE PROPOSED NEW CONSTRUCTION. OTHER UTILITIES NOT SPECIFICALLY IDENTIFIED IN THESE DOCUMENTS AND NOT ANTICIPATED FOR REUSE SHALL BE REMOVED IN ENTIRETY.
3. FOR ALL EXISTING MATERIALS THAT CAN BE SALVAGED, OWNER HAS FIRST RIGHT OF REFUSAL FOR REMOVED ITEMS THAT MAY HAVE RESIDUAL COMMERCIAL OR HISTORIC VALUE INCLUDING HARDWARE, GLASS, CORNER STONES, TIME CAPSULES, LIGHT STANDARDS, SIGNS, FENCING, BENCHES, WATER FOUNTAINS, TRASH CONTAINERS, ETC. SHALL REMAIN AS PROPERTY OF THE OWNER. ALL ITEMS TO BE SALVAGED FOR REUSE/REINSTALLATION MUST MEET CURRENT CODE REQUIREMENTS. COORDINATE ITEMS TO BE RETAINED WITH OWNER AND REMOVE FROM CONSTRUCTION SITE TO A LOCATION APPROVED BY OWNER. REMOVED MATERIALS, NOT INDICATED OR DIRECTED TO BE SALVAGED FOR THE OWNER'S BENEFIT ARE DEBRIS AND BECOME THE CONTRACTOR'S PROPERTY UPON REMOVAL.
4. THE EXISTENCE AND LOCATION OF ANY UNDERGROUND UTILITY PIPES OR STRUCTURES SHOWN ON THESE PLANS ARE OBTAINED BY SEARCH OF THE AVAILABLE RECORDS AND FIELD SURVEYS. THE CONTRACTOR SHALL CONTACT UNDERGROUND SERVICE ALERT, UTILITY COMPANIES, AND/OR FIELD VERIFY AND LOCATE ALL UTILITIES BEFORE PROCEEDING WITH WORK. THE CONTRACTOR IS ALSO REQUIRED TO TAKE DUE PRECAUTIONARY MEASURES TO PROTECT THE UTILITY LINES SHOWN AND ANY OTHER LINES NOT OF RECORD OR NOT SHOWN ON THESE PLANS. NOTIFY THE ENGINEER IF ADDITIONAL UTILITIES ARE LOCATED OR IF CONFLICTS ARE FOUND WITH EXISTING CONDITIONS.
5. ALL TREES TO BE REMOVED SHALL BE MARKED BY CONTRACTOR AND APPROVED FOR REMOVAL BY THE OWNER OR OWNER'S REPRESENTATIVE PRIOR TO REMOVING OR CUTTING TREE(S). EXISTING ROOTS SHALL BE GRINDED TO A DEPTH OF APPROXIMATELY 3-FEET. USE CAUTION WHILE GRINDING WHEN EXISTING UTILITIES ARE IN CLOSE PROXIMITY TO TREES. ALL TREES TO REMAIN WITHIN THE LIMIT OF WORK SHALL BE PROTECTED AND MAINTAINED PER SPECIFICATIONS AND DETAILS.
6. SAWCUT EXISTING CONCRETE AND ASPHALT TO AN EXISTING CONTROL JOINT WHERE POSSIBLE, AT MINIMUM TO A NEAT-STRAIGHT LINE. ALL DEBRIS SHALL BE HAULED OFFSITE TO A LEGAL DUMPING SITE OR SALVAGED FOR REUSE ON PROJECT AS NOTED.
7. WORK WITHIN CITY, COUNTY, OR STATE RIGHT-OF-WAY REQUIRES A SEPARATE ENCROACHMENT PERMIT WHICH THE CONTRACTOR IS RESPONSIBLE FOR OBTAINING PRIOR TO STARTING WORK WITHIN RIGHT-OF-WAY.
8. CONTRACTOR TO COORDINATE UTILITY DEMOLITION WITH DRAINAGE AND UTILITY WORK SHOWN IN THIS PLAN SET. ALL UTILITY SHUTDOWNS SHALL BE COORDINATED PER PROJECT SPECIFICATIONS.
9. EXISTING DRY UTILITIES SHOWN FOR DEMOLITION ARE SHOWN FOR COORDINATION ONLY. REFER TO OTHER DISCIPLINES FOR LIMITS AND DETAILS OF DEMOLITION.
10. THE CONTRACTOR SHALL RECYCLE CONSTRUCTION DEBRIS, ASPHALT, AND CONCRETE GENERATED FROM REMOVALS REQUIRED TO CONSTRUCT THE PROJECT. THE CONTRACTOR IS OBLIGATED, UNDER THIS CONTRACT, TO RECYCLE THE WASTE MATERIAL THROUGH AN APPROVED RECYCLING PLANT.
11. A LIST OF FACILITIES THAT ACCEPT CONSTRUCTION & DEMOLITION DEBRIS CAN BE FOUND ON THE CALRECYCLE WEBSITE AT: HTTPS://WWW.CALRECYCLE.CA.GOV/CONDEMO
12. CONTRACTOR IS RESPONSIBLE FOR PROTECTING EXISTING BUILDING FINISHES DURING DEMOLITION. ANY FINISH THAT IS DAMAGED DURING DEMOLITION SHALL BE REPAIRED OR REPLACED IN-KIND OR BETTER.

GENERAL NOTES TO CONTRACTOR

1. THE CONTRACTOR SHALL CONTACT THE RESPECTIVE UTILITY OWNERS FOR LOCATION, REMOVAL, AND/OR RELOCATION OF ANY UTILITY SERVICES AFFECTED BY CONSTRUCTION. THE CONTRACTOR SHALL TAKE ALL NECESSARY PRECAUTIONARY MEASURES TO PROTECT UNDERGROUND OR OVERHEAD STRUCTURES WHETHER OR NOT THEY ARE SHOWN ON THESE DRAWINGS.
2. THE CONTRACTOR SHALL NOTIFY THE PROJECT INSPECTOR AND THE RESPECTIVE UTILITY OWNERS AND OTHER AGENCIES AT LEAST TWO WORKING DAYS PRIOR TO START OF CONSTRUCTION.
3. THE CONTRACTOR SHALL BE RESPONSIBLE FOR EXPOSING, VERIFYING LOCATIONS (BOTH HORIZONTAL AND VERTICAL), AND MAINTAINING ALL EXISTING UNDERGROUND UTILITIES, BOTH SHOWN ON THE PLANS AND/OR NOT SHOWN ON THE PLANS DURING CONSTRUCTION. REPAIR DAMAGED UTILITIES TO THE SATISFACTION OF THE ENGINEER. THE CONTRACTOR SHALL LOCATE EXISTING UNDERGROUND UTILITIES SUFFICIENTLY AHEAD OF CONSTRUCTION TO PERMIT REVISIONS TO PLANS BECAUSE OF LOCATIONS OF EXISTING FACILITIES AND SHALL REPORT ALL DISCREPANCIES TO THE ENGINEER PRIOR TO THE COMMENCEMENT OF WORK.
4. THE EXISTENCE AND LOCATION OF ANY UNDERGROUND UTILITIES AND/OR STRUCTURES SHOWN ON THESE PLANS WERE OBTAINED BY A SEARCH OF THE AVAILABLE RECORDS. APPROVAL OF THESE PLANS DOES NOT CONSTITUTE A REPRESENTATION AS TO THE ACCURACY OR COMPLETENESS OF THE LOCATION OR THE EXISTENCE, OR NON-EXISTENCE OF ANY UTILITY AND/OR STRUCTURE WITHIN THE LIMITS OF THIS PROJECT. THE CONTRACTOR IS REQUIRED TO TAKE ALL DUE PRECAUTIONARY MEASURES TO PROTECT THE UTILITIES OF RECORD AND/OR NOT OF RECORD SHOWN OR NOT SHOWN AND ANY OTHER LINE(S) OR STRUCTURE(S) NOT SHOWN ON THESE PLANS. THE CONTRACTOR IS RESPONSIBLE FOR THE PROTECTION OF, AND/OR DAMAGE TO THESE LINE(S) AND/OR STRUCTURE(S).
5. THE CONTRACTOR SHALL BE RESPONSIBLE FOR TEMPORARY SHORING AT PROPOSED BUILDING FOUNDATIONS, FOOTINGS, AND WALLS TO PROTECT EXISTING UTILITIES IN PLACE.
6. UNAUTHORIZED CHANGES AND USES - CAUTION: THE ENGINEER PREPARING THESE PLANS WILL NOT BE RESPONSIBLE FOR, OR LIABLE FOR, UNAUTHORIZED CHANGES TO OR USES OF THESE PLANS. ALL CHANGES TO THE PLANS MUST BE IN WRITING AND MUST BE APPROVED BY THE PREPARER OF THESE PLANS.
7. THE CONTRACTOR SHALL MAINTAIN THE EXISTING ACCESSIBLE ROUTE CLEAR OR PROVIDE AN ALTERNATE ACCESSIBLE ROUTE OF TRAVEL DURING DEMOLITION AND/OR CONSTRUCTION.
8. THE CONTRACTOR SHALL MAINTAIN THE EXISTING FIRE EXITS AND STAIRS CLEAR AND USABLE OR PROVIDE ALTERNATE FIRE EXITS DURING DEMOLITION AND/OR CONSTRUCTION.

EARTHWORK NOTES

1. IT IS THE CONTRACTOR'S RESPONSIBILITY TO REVIEW THE GRADING PLANS AND SOILS REPORT THOROUGHLY PRIOR TO SITE MOBILIZATION. IT IS ALSO THE GRADING CONTRACTOR'S RESPONSIBILITY TO NOTIFY THE CIVIL AND SOILS ENGINEERS IF ONSITE DISCREPANCIES ARE OBSERVED THAT WOULD AFFECT THE EARTHWORK QUANTITIES.
2. THE EXISTING TOPOGRAPHY AS DELINEATED ON THESE DRAWINGS SHALL BE UTILIZED AS THE BASIS FOR ALL EARTHWORK COMPUTATIONS. SAID TOPOGRAPHY SHALL BE PRESUMED TO BE ACCEPTABLE TO ALL INTERESTED PARTIES UNLESS A DEVIATION IS FOUND PRIOR TO THE START OF GRADING IN ANY SPECIFIC AREAS. ANY DEVIATION SO DETERMINED SHALL BE PROMPTLY TRANSMITTED TO ALL INTERESTED PARTIES.
3. THE CONTRACTOR IS REQUIRED TO ESTIMATE THE QUANTITIES OF GRADING WORK TO BE DONE AND INCLUDE ALL COSTS THEREFROM WITH HIS BID, AS NO ADDITIONAL ALLOWANCE WILL BE MADE WITHOUT PRIOR CONSENT FROM THE OWNER.
4. OVER-EXCAVATION AND/OR EXCESS BACKFILLING OR DUPLICATION OF GRADING ACTIVITIES IS NOT A BASIS FOR ADDITIONAL COMPENSATION. THIS ALSO APPLIES WHERE MATERIAL IS TO BE REMOVED AND REPLACED TO REDUCE MOISTURE CONTENT.
5. OFF-SITE DISPOSAL OF EXCAVATION MATERIAL IS THE RESPONSIBILITY OF THE CONTRACTOR AND SHALL BE INCLUDED IN THE BID. THE CONTRACTOR SHALL HOLD THE OWNER AND ENGINEER HARMLESS AS A RESULT OF ANY CLAIMS ARISING FROM THE ACTIONS ENROUTE OR AWAY FROM THE SITE.
6. EARTH VOLUMES SHOWN HEREON ARE ESTIMATES BASED UPON THE GEOTECHNICAL ANALYSIS PERFORMED BY THE NAMED SOILS ENGINEER AND TOPOGRAPHIC SURVEY OF THE EXISTING GROUND SURFACE AT THE TIME OF PLAN PREPARATION. EARTHWORK VOLUMES ARE COMPUTED BY METHODS COMMONLY USED IN STANDARD ENGINEERING PRACTICE, AND ARE INTENDED FOR USE IN ESTABLISHING GOVERNING AGENCY FEES. ACTUAL FIELD CONDITIONS MAY VARY FROM OBSERVED OR MEASURED CONDITIONS AT THE TIME OF PLAN PREPARATION. EARTHWORK QUANTITIES MAY VARY AS A RESULT.
7. ANY EXPORT OR IMPORT REQUIRED TO BALANCE THE SITE SHALL BE THE SOLE RESPONSIBILITY OF THE CONTRACTOR.
8. PAVEMENT AND SUBGRADE RECOMMENDATIONS RELATED TO OVER-EXCAVATION, PAVEMENT SUBGRADE, ETC., PER GEOTECHNICAL REPORT.

GEOTECHNICAL INFORMATION

FOR SITE PREPARATION, OVEREXCAVATION, FOUNDATION RECOMMENDATIONS, PAVEMENT, SUBGRADE, AND GRADATION REQUIREMENTS SEE GEOTECHNICAL INVESTIGATION REPORT ENTITLED:

"GEOTECHNICAL AND GEOLOGICAL ENGINEERING INVESTIGATION REPORT"

PREPARED BY: KOURY ENGINEERING & TESTING, INC.
5711 SCHAEFER AVENUE
CHINO, CALIFORNIA 91710

PROJECT NO: 25-3846

DATED: JANUARY 22, 2026

EARTHWORK QUANTITIES

APPROXIMATE CUT: 2,250 CY

APPROXIMATE FILL: 950 CY (1)

NOTE:
EARTHWORK QUANTITIES INDICATED ARE FOR REFERENCE ONLY (NOT FOR BID OR PAYMENT). THE CONTRACTOR IS RESPONSIBLE FOR ACTUAL QUANTITIES.

HAUL ROUTE TO BE DETERMINED AT PRE-GRADE MEETING AND ALL NECESSARY PERMITS SHALL BE OBTAINED BY THE GENERAL CONTRACTOR

BENCHMARK

ELEVATIONS ARE REFERENCED TO THE NAVD88 DATUM, DEFINED LOCALLY BY THE LOS ANGELES COUNTY BENCHMARK SYSTEM AND TIED TO THE FOLLOWING LA COUNTY BENCHMARKS:
HY9487, ELEVATION 1250.087 FEET
HY11825, ELEVATION 1204.284 FEET

DATUM STATEMENT

COORDINATES ARE REFERENCED TO THE CCS83, ZONE 5 GRID, NAD83(2011) CSRN EPOCH 2025.00, DEFINED LOCALLY BY THE CALIFORNIA SPATIAL REFERENCE SYSTEM.

BASIS OF BEARINGS

RECORD BOUNDARY SHOWN HEREON IS BASED ON RECORD MAPS (PARCEL MAP NO. 86-0404, P.M.B. 231/35-36, ORANGE COUNTY). THE BOUNDARY IS SUBJECT TO CHANGE IF AN ACTUAL BOUNDARY SURVEY IS PERFORMED. THE BOUNDARY IS FOR INFORMATIONAL PURPOSES ONLY. NO TITLE REPORT WAS PROVIDED BY CLIENT.

FIRE PROTECTION SYSTEM NOTES

1. PRIOR TO INSTALLATION, ALL PLANS AND SPECIFICATIONS SHALL BE APPROVED BY GOVERNING AGENCY.
2. INSPECTIONS ARE REQUIRED:
   1) PRIOR TO POURING THRUST BLOCKS
   2) FOR HYDROSTATIC TESTING
   3) FOR FLUSH
3. INSTALLATION, INSPECTION, AND TESTING SHALL CONFORM TO 2022 NFPA 13 AND 2019 NFPA 24.
4. PRIVATE FIRE HYDRANTS SHALL BE APPROVED WET BARREL STYLE WITH A MINIMUM OF ONE 2½" AND ONE 4" OUTLET. THE 4" OUTLET SHALL FACE THE FIRE DEPARTMENT ACCESS ROAD. ALL OUTLETS SHALL BE PROVIDED WITH NATIONAL STANDARD THREADS (NST).
5. FIRE HYDRANT SUPPLY PIPING SHALL BE A MINIMUM OF SIX INCHES IN DIAMETER. THE LOWEST OPERATING NUT SHALL BE MINIMUM OF 18" ABOVE GRADE AND THE FIRE HYDRANT FLANGE SHALL BE A MINIMUM OF 2" ABOVE GRADE.
6. FIRE HYDRANTS SHALL BE A MINIMUM OF 40 FEET FROM ALL STRUCTURES. A KEYED GATE VALVE SHALL BE PROVIDED FOR EACH FIRE HYDRANT IN AN ACCESSIBLE LOCATION. VALVES SHALL NOT BE LOCATED IN PARKING STALLS.
7. ALL PIPES SHALL BE APPROVED FOR USE IN FIRE SERVICE SYSTEMS (CLASS 900 DR-18 MINIMUM). CLASS 900 DR-14 PIPES SHALL BE USED WHERE THE PRESSURES MAY EXCEED 150 PSI.
8. ALL FERROUS PIPE AND FITTINGS SHALL BE PROTECTED WITH LOOSE 8-MIL POLYETHYLENE TUBE. THE ENDS OF THE TUBE AND ANY SPLICES MADE FOR T's OR OTHER PIPING COMPONENTS SHALL BE SEALED WITH 2" TAPE, APPROVED FOR UNDERGROUND USE. ALL BOLT JOINTS SHALL BE CLEANED AND THOROUGHLY COATED WITH ASPHALT OR OTHER CORROSION RETARDING MATERIAL AFTER ASSEMBLY AND PRIOR TO POLY-TUBE INSTALLATION.
9. A BED OF CLEAN FILL SAND SHALL BE PROVIDED ABOVE AND BELOW THE PIPE, A MINIMUM OF 12" ABOVE AND 6" BELOW.
10. ALL BOLTS USED FOR UNDERGROUND CONNECTIONS SHALL BE STAINLESS STEEL.
11. A MINIMUM OF 30" OF COVER, FROM FINISHED GRADE TO THE TOP OF THE PIPE SHALL BE PROVIDED. WHEN SURFACE LOADS ARE EXPECTED, A MINIMUM OF 36" COVER SHALL BE PROVIDED.
12. THRUST BLOCKS, OR OTHER APPROVED METHOD OF THRUST RESTRAINT, SHALL BE PROVIDED WHEREVER PIPE CHANGES DIRECTION.
13. THE TRENCH SHALL BE EXCAVATED FOR THRUST BLOCKS AND INSPECTED PRIOR TO POUR. ALL CORROSION PROTECTION SHALL BE IN PLACE.
14. A HYDROSTATIC TEST (200 PSI FOR TWO HOURS OR 50 PSI OVER MAXIMUM STATIC PRESSURE, WHICHEVER IS GREATER) SHALL BE PERFORMED. BACKFILL BETWEEN THE JOINTS TO PREVENT MOVEMENT OF THE PIPE.
15. THE SYSTEM SHALL BE THOROUGHLY FLUSHED BEFORE CONNECTION IS MADE TO OVERHEAD PIPING. FLOW SHALL BE THROUGH A MINIMUM 4" HOSE PIPE.
16. PRIVATE HYDRANTS, SPRINKLER CONTROL VALVES, DETECTOR CHECK ASSEMBLIES, POST INDICATING VALVES AND FIRE DEPARTMENT CONNECTIONS SHALL BE PAINTED OSHA RED, UNLESS NOTED OTHERWISE.
17. THE CONTROL VALVES SHALL BE LOCKED IN THE OPEN POSITION. VALVES SHALL BE MONITORED IF THEY SERVE 6 OR MORE SPRINKLER HEADS.

FIRE WATER GENERAL NOTES:

1. FIRE WATER PIPE, FITTINGS, AND APPURTENANCES SHALL COMPLY WITH NFPA 24 INCLUDING BUT NOT LIMITED TO THE FOLLOWING:
   - 1.1. FIRE DEPARTMENT CONNECTIONS (FDC) SHALL BE PER NFPA 24-5.9.
   - 1.2. FDC LOCATION AND SIGNAGE SHALL BE PER NFPA 24-5.9.5.

IMPORTANT NOTICE

1. ALL ASBESTOS CEMENT PIPE TO BE REMOVED SHALL BE SNAPPED, ENCAPSULATED, AND DISPOSED OF PER LOCAL, STATE, AND FEDERAL REGULATIONS.
2. DOMESTIC WATER SERVICE AND FIRE PROTECTION SHALL BE MAINTAINED DURING CONSTRUCTION. PROVIDE BYPASS LINES DURING CONSTRUCTION INCLUDING TIE-IN. COORDINATE ALL SHUT DOWNS OF WATER AND POWER WITH OWNER PRIOR TO CONSTRUCTION.
3. PURSUANT TO CALIFORNIA ASSEMBLY BILL 1953 ALL PIPE, FITTINGS, AND FIXTURES INTENDED TO CONVEY OR DISPENSE WATER FOR HUMAN CONSUMPTION THROUGH DRINKING WATER OR COOKING SHALL BE "LEAD FREE" AS OF JANUARY 1, 2010.

DEDICATED FIRE ACCESS

PORTIONS OF DEMOLITION MAY REQUIRE BLOCKING AND/OR OBSTRUCTING THROUGH ACCESS TO EMERGENCY / FIRE ACCESS VEHICLES. IT SHALL BE THE SOLE RESPONSIBILITY OF THE CONTRACTOR TO PROVIDE A FIRE WATCH SPECIALIST SERVICE FOR THE DURATION OF TIME THAT EMERGENCY / FIRE ACCESS VEHICLES ARE BLOCKED AND/OR OBSTRUCTED DURING CONSTRUCTION UNLESS EQUIVALENT ALTERNATE MEASURES ARE TAKEN TO ENSURE CONTINUOUS ACCESS TO EMERGENCY / FIRE ACCESS VEHICLES. CONTRACTOR TO COORDINATE THROUGH ACCESS TO EMERGENCY / FIRE ACCESS VEHICLES WITH THE LOCAL FIRE AUTHORITY HAVING JURISDICTION.

VICINITY MAP

NTS

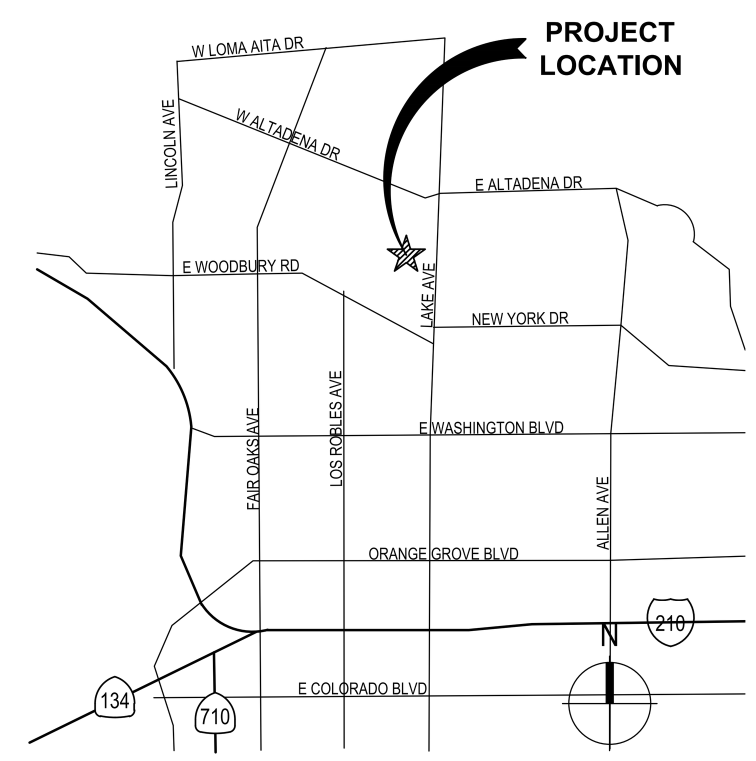

LOCATION MAP

NTS

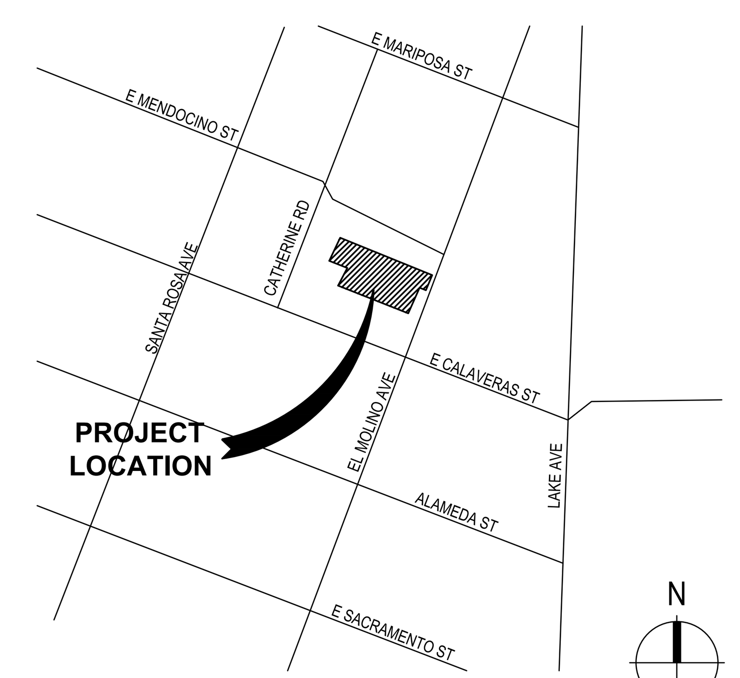

CIVIL SHEET INDEX

C0.01	CIVIL NOTES
C0.02	EXISTING CONDITIONS
C1.01	DEMOLITION PLAN
C2.01	GRADING PLAN
C2.02	GRADING PLAN
C2.03	GRADING PLAN
C2.04	GRADING PLAN
C2.05	GRADING ENLARGEMENT PLAN
C2.06	GRADING ENLARGEMENT PLAN
C2.07	GRADING ENLARGEMENT PLAN
C2.08	GRADING ENLARGEMENT PLAN (1)
C3.01	STORM DRAIN & UTILITY PLAN
C3.02	STORM DRAIN & UTILITY ENLARGEMENTS
C5.01	HORIZONTAL CONTROL, PAVING, STRIPING AND SIGNAGE PLAN
C6.01	EROSION CONTROL PLAN
C7.01	DETAILS
C7.02	DETAILS

DIG ALERT NOTICE

PURSUANT TO THE CALIFORNIA GOVERNMENT CODE SECTION 4216, NO EXCAVATION PERMIT IS VALID UNLESS DIG ALERT HAS BEEN CONTACTED AT LEAST TWO (2) WORKING DAYS PRIOR TO THE COMMENCEMENT OF EXCAVATION AND AN INQUIRY IDENTIFICATION NUMBER HAS BEEN ISSUED.

INQUIRY ID# ____________

DIGALERT
811 Know what's below. Call 811 before you dig.

LPA
ARCHITECTURE ENGINEERING INTERIOR DESIGN LANDSCAPE ARCHITECTURE PLANNING
949-261-1001 Office
LPADesignStudios.com
5301 California Avenue, Suite 100
Irvine, California 92617

REGISTERED PROFESSIONAL ENGINEER KATHEREEN M. SHINKAI R.C.E. 68369 EXP. 9-30-27 CIVIL STATE OF CALIFORNIA

THE JOBSON FAMILY FOUNDATION
CONCEPT DESIGN:
Landscape Architect
Helle Nebelong
Denmark
hellenebelong.com

This document and all other project documents, ideas, aesthetics and designs incorporated therein are instruments of service. All project documents are copyright protected, are the property of LPA, Inc. (LPA) and cannot be lawfully used in whole or in part for any project or purpose except as set forth in the contractual agreement between LPA and its Client. The unauthorized disclosure and/or use of the project documents (including the creation of derivative works), may give rise to liability for copyright infringement, unlawful disclosure, use or misappropriation of property rights held by LPA. The unauthorized use of the project documents will give rise to the recovery of monetary losses and damages including attorney fees and costs for which the unauthorized user will be held liable.
Project documents describe the design intent of the work and are not a representation of as-built or existing conditions. LPA is not responsible for any discrepancies between the project documents and the existing conditions.

© LPA, Inc.

ALTADENA ARTS MAGNET SCHOOL

743 E Calaveras ST.
Altadena, CA 91001

Developed for
PUSD

Revision	Date
ADDENDUM 1	04/28/2026

Submittal	Date
100% SCHEMATIC DESIGN	12/08/2025
DSA SUBMITTAL	02/02/2026
DSA SUBMITTAL V2	03/13/2026

Job Number	33366
Checked By	KS
Scale	1' = 20'

CIVIL NOTES

C0.01

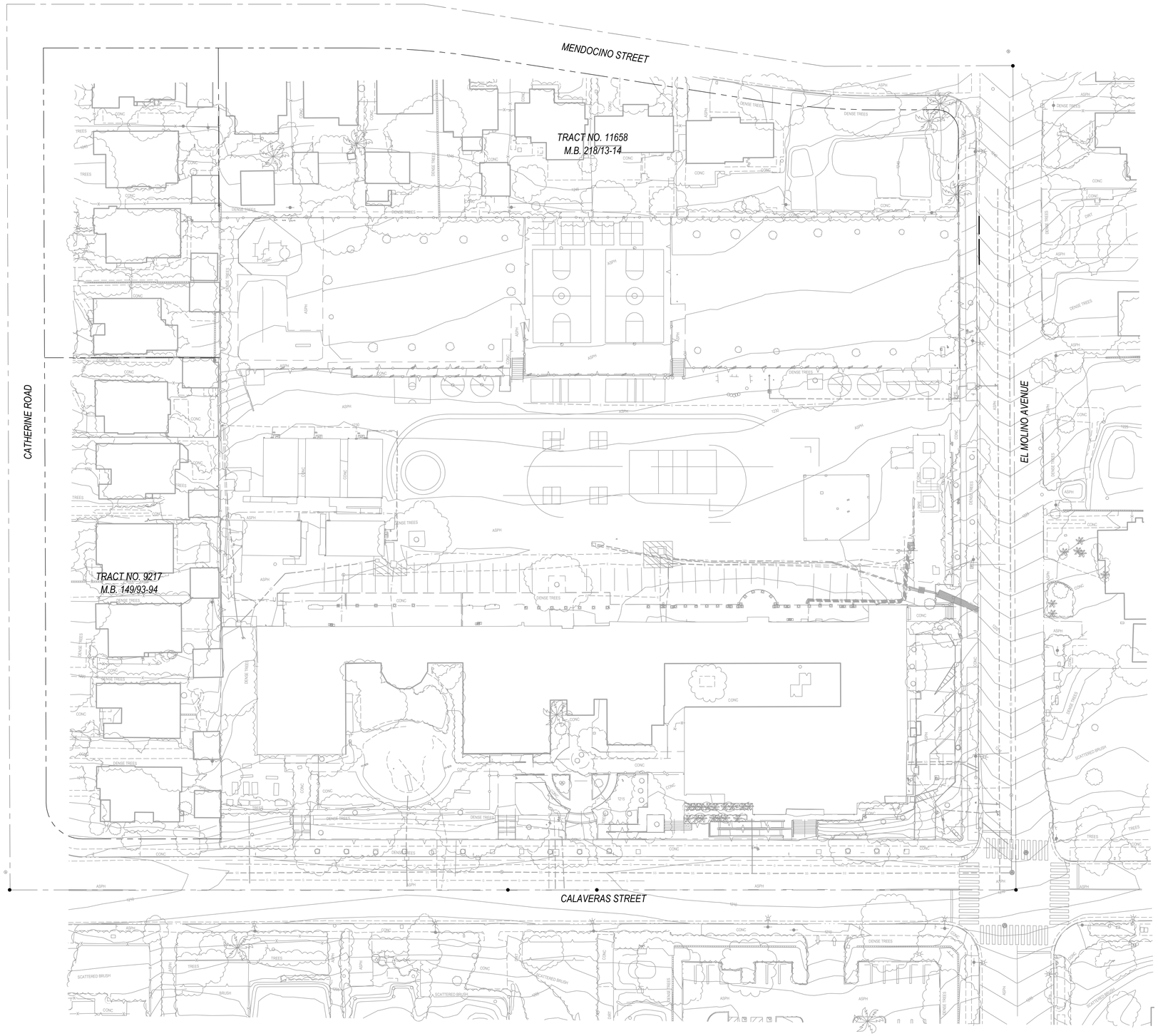

N

0 15 30 60

EXISTING CONDITIONS 1" = 30' 01

LPA

ARCHITECTURE ENGINEERING INTERIOR DESIGN
LANDSCAPE ARCHITECTURE PLANNING

949-261-1001 Office

LPADesignStudios.com

5301 California Avenue, Suite 100
Irvine, California 92617

REGISTERED PROFESSIONAL ENGINEER
KATHLEEN M. SPANGLER
R.C.E. 68369
EXP. 9-30-27
CIVIL
STATE OF CALIFORNIA

THE JOBSON FAMILY FOUNDATION

CONCEPT DESIGN:
Landscape Architect
Helle Nebelong
Denmark
hellenebelong.com

This document and all other project documents, ideas, aesthetics and designs incorporated therein are instruments of service. All project documents are copyright protected, are the property of LPA, Inc. (LPA) and cannot be lawfully used in whole or in part for any project or purpose except as set forth in the contractual agreement between LPA and its Client. The unauthorized disclosure and/or use of the project documents (including the creation of derivative works), may give rise to liability for copyright infringement, unlawful disclosure, use or misappropriation of property rights held by LPA. The unauthorized use of the project documents will give rise to the recovery of monetary losses and damages including attorney fees and costs for which the unauthorized user will be held liable.
Project documents describe the design intent of the work and are not a representation of as-built or existing conditions. LPA is not responsible for any discrepancies between the project documents and the existing conditions.

© LPA, Inc.

ALTADENA ARTS MAGNET SCHOOL

743 E Calaveras ST.
Altadena, CA 91001

Developed for
PUSD

Revision	Date
ADDENDUM 1	04/28/2026

Submittal	Date
100% SCHEMATIC DESIGN	12/08/2025
DSA SUBMITTAL	02/02/2026
DSA SUBMITTAL V2	03/13/2026

Job Number	33366
Checked By	KS
Scale	AS NOTED

EXISTING CONDITIONS

C0.02

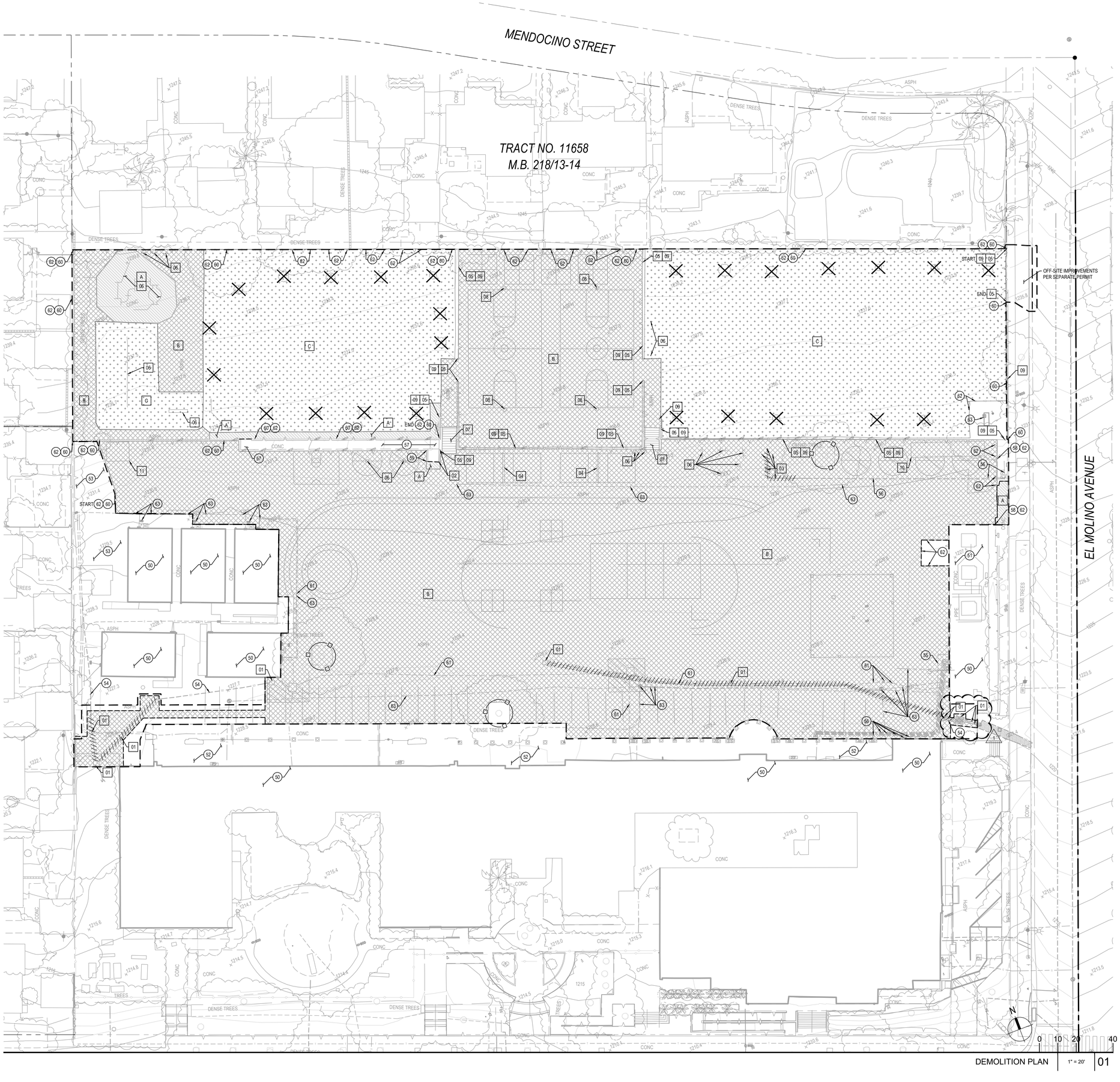

DEMOLITION PLAN 1" = 20' 01

DEMOLITION NOTES

-SEE DEMOLITION NOTES, SHEET C0.01.

DEMOLITION LEGEND

LABEL	DESCRIPTION
A	REMOVE (E) CONCRETE PAVEMENT/SIDEWALK, SEE DEMOLITION NOTE 10 SHEET C0.01.
B	REMOVE (E) AC PAVEMENT, SEE DEMOLITION NOTE 10 SHEET C0.01.
C	REMOVE (E) LANDSCAPING. SEE LANDSCAPE AND IRRIGATION PLANS FOR IMPROVEMENTS.
	REMOVE (E) TREE, SEE DEMOLITION NOTE 5 SHEET C0.01.
	(E) TREE TO REMAIN AND BE PROTECTED, SEE DEMOLITION NOTE 5 SHEET C0.01.
	SAWCUT (E) PAVEMENT AS NEEDED. SEE DEMOLITION NOTE 6 AND 10 SHEET C0.01.
	APPROXIMATE LIMIT OF WORK LINE.
	REMOVE (E) UTILITY, SEE DEMOLITION NOTES 2, 4, 8, AND 9 SHEET C0.01.

DEMOLITION KEYNOTES

KEY NOTE	DESCRIPTION
01	REMOVE (E) STORM DRAIN PIPE AND APPURTENANCES. SEE UTILITY PLAN FOR IMPROVEMENTS.
02	REMOVE (E) CONCRETE CURB.
03	REMOVE AND RELOCATE (E) FIRE HYDRANT, VALVE, AND PROTECTION BOLLARD PER STORM DRAIN AND UTILITY PLAN.
04	REMOVE (E) HANDBALL WALL AND FOOTING.
05	REMOVE (E) RETAINING WALL AND FOOTING.
06	REMOVE (E) EQUIPMENT. SALVAGE AND RETURN TO THE OWNER.
07	REMOVE (E) CONCRETE STAIRS WITH HANDRAILS.
08	REMOVE (E) BASKETBALL POSTS AND FOOTINGS.
09	REMOVE (E) FENCE AND FOOTINGS, SEE LANDSCAPE PLANS FOR IMPROVEMENTS.
10	REMOVE (E) STORAGE CONTAINER. SALVAGE AND RELOCATE PER LANDSCAPE DRAWINGS.
11	REMOVE (E) SHED. SALVAGE AND RETURN TO THE OWNER.

PROTECTION KEYNOTES

KEY NOTE	DESCRIPTION
50	PROTECT (E) BUILDING, FOUNDATION AND OTHER STRUCTURAL FEATURES AND BUILDING UTILITIES.
51	PROTECT (E) UTILITY YARD AND ITS PERIMETER WALL, OTHER STRUCTURAL FEATURES AND UTILITIES.
52	PROTECT (E) CONCRETE PAVEMENT/SIDEWALK.
53	PROTECT (E) AC PAVEMENT.
54	PROTECT (E) STORM DRAIN FACILITIES. ADJUST UTILITY COVER TO NEW GRADES IF NECESSARY.
55	PROTECT (E) GAS FACILITIES. ADJUST UTILITY COVER TO NEW GRADES IF NECESSARY.
56	PROTECT (E) WATER SERVICE FACILITIES.
57	PROTECT (E) CONCRETE ACCESSIBLE RAMP AND GUARDRAILS.
58	PROTECT (E) CURB.
59	PROTECT (E) CURB AND GUTTER
60	PROTECT (E) RETAINING WALL.
61	PROTECT (E) TELEPHONE FACILITIES. ADJUST UTILITY COVER TO NEW GRADES IF NECESSARY.
62	PROTECT (E) FENCE/GATE AND POST.
63	PROTECT (E) ELECTRICAL FACILITIES. ADJUST UTILITY COVER TO NEW GRADES IF NECESSARY.

LPA
ARCHITECTURE ENGINEERING INTERIOR DESIGN
LANDSCAPE ARCHITECTURE PLANNING
949-261-1001 Office
LPADesignStudios.com
5301 California Avenue, Suite 100
Irvine, California 92617

REGISTERED PROFESSIONAL ENGINEER
KATHLEEN M. SPINNEY
R.C.E. 68369
EXP. 9-30-27
CIVIL
STATE OF CALIFORNIA

THE JOBSON FAMILY FOUNDATION
CONCEPT DESIGN:
Landscape Architect
Helle Nebelong
Denmark
hellenebelong.com

This document and all other project documents, ideas, aesthetics and designs incorporated therein are instruments of service. All project documents are copyright protected, are the property of LPA, Inc. (LPA) and cannot be lawfully used in whole or in part for any project or purpose except as set forth in the contractual agreement between LPA and its Client. The unauthorized disclosure and/or use of the project documents (including the creation of derivative works), may give rise to liability for copyright infringement, unlawful disclosure, use or misappropriation of property rights held by LPA. The unauthorized use of the project documents will give rise to the recovery of monetary losses and damages including attorney fees and costs for which the unauthorized user will be held liable.
Project documents describe the design intent of the work and are not a representation of as-built or existing conditions. LPA is not responsible for any discrepancies between the project documents and the existing conditions.

© LPA, Inc.

ALTADENA ARTS MAGNET SCHOOL

743 E Calaveras ST.
Altadena, CA 91001

Developed for
PUSD

Revision	Date
ADDENDUM 1	04/28/2026

Submittal	Date
100% SCHEMATIC DESIGN	12/08/2025
DSA SUBMITTAL	02/02/2026
DSA SUBMITTAL V2	03/13/2026

Job Number	33366
Checked By	KS
Scale	1" = 20'

DEMOLITION PLAN

C1.01

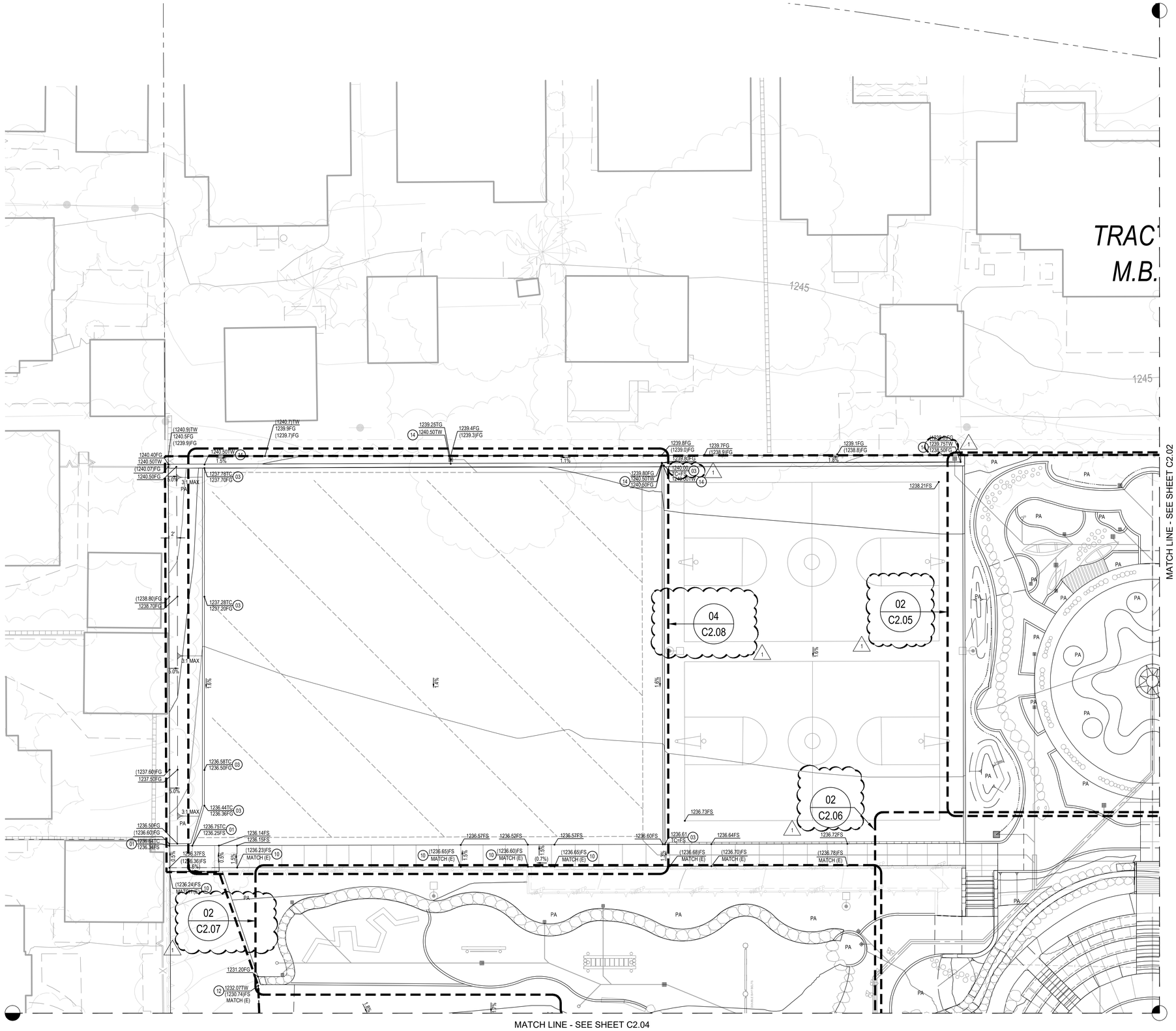

LEGEND

SYMBOL	DESCRIPTION
PA	PLANTING AREA SEE LANDSCAPE PLAN DETAILS FOR GRADES ADJACENT TO HARDSCAPE
	APPROXIMATE LIMIT OF WORK
GB	GRADE BREAK
	SAWCUT (E) PAVEMENT AS NEEDED. SEE DEMOLITION PLAN
	FLOWLINE
TOS	TOP OF SLOPE
TOE	TOE OF SLOPE

GRADING CONSTRUCTION NOTES

KEY NOTE	DESCRIPTION
01	CONSTRUCT VERTICAL CURB PER DETAIL 02 SHEET C7.01.
02	CONSTRUCT CURB AND GUTTER PER DETAIL 03 SHEET C7.01.
03	CONSTRUCT FLUSH CURB PER LANDSCAPE DETAIL 09 SHEET L5.01.
04	CONSTRUCT CURB OPENING AND LOCAL DEPRESSION PER PLAN.
06	CONSTRUCT VALLEY GUTTER PER DETAIL 04 SHEET C7.01.
07	CONSTRUCT ACCESSIBLE CURB RAMP PER DETAIL 17 SHEET C7.01.
09	JOIN EXISTING CURB AND/OR GUTTER AND MATCH GRADE.
10	JOIN EXISTING SIDEWALK AND MATCH EXISTING GRADE.
11	ADJUST EXISTING UTILITY RIM AND RISER TO FINISHED GRADE.
12	COLD MILL EDGES TO JOIN EXISTING ASPHALT PAVEMENT AND MATCH GRADE.
13	ADJUST EXISTING MANHOLE RIM TO FINISHED GRADE. MANHOLE CONE TO BE RAISED IF GRADE RINGS EXCEED ALLOWABLE HEIGHT FOR LADDER ACCESS.
14	CONSTRUCT CONCRETE RETAINING WALL PER LANDSCAPE DETAIL 01 SHEET L5.02.
15	CONSTRUCT COBBLESTONE FLUSH CURB PER LANDSCAPE DETAIL 24 SHEET L5.01.

GRADING NOTES

1. CONTRACTOR SHALL MAINTAIN POSITIVE DRAINAGE AWAY FROM THE EXISTING RETAINING WALL. DO NOT BURY, BLOCK, OR OBSTRUCT EXISTING WEEP HOLES. FINAL GRADE SHALL BE ESTABLISHED AT A MINIMUM OF 2 INCHES BELOW THE LOWEST WEEP HOLE OPENING.

N

0 5 10 20

GRADING PLAN 1" = 10' 01

LPA

ARCHITECTURE ENGINEERING INTERIOR DESIGN
LANDSCAPE ARCHITECTURE PLANNING

949-261-1001 Office

LPADesignStudios.com

5301 California Avenue, Suite 100
Irvine, California 92617

REGISTERED PROFESSIONAL ENGINEER
KATHLEEN M. SPINNEY
R.C.E. 68369
EXP. 9-30-27
CIVIL
STATE OF CALIFORNIA

THE JOBSON FAMILY FOUNDATION

CONCEPT DESIGN:
Landscape Architect
Helle Nebelong
Denmark
hellenebelong.com

This document and all other project documents, ideas, aesthetics and designs incorporated therein are instruments of service. All project documents are copyright protected, are the property of LPA, Inc. (LPA) and cannot be lawfully used in whole or in part for any project or purpose except as set forth in the contractual agreement between LPA and its Client. The unauthorized disclosure and/or use of the project documents (including the creation of derivative works), may give rise to liability for copyright infringement, unlawful disclosure, use or misappropriation of property rights held by LPA. The unauthorized use of the project documents will give rise to the recovery of monetary losses and damages including attorney fees and costs for which the unauthorized user will be held liable.
Project documents describe the design intent of the work and are not a representation of as-built or existing conditions. LPA is not responsible for any discrepancies between the project documents and the existing conditions.

© LPA, Inc.

ALTADENA ARTS MAGNET SCHOOL

743 E Calaveras ST.
Altadena, CA 91001

Developed for
PUSD

Revision	Date
ADDENDUM 1	04/28/2026

Submittal	Date
100% SCHEMATIC DESIGN	12/08/2025
DSA SUBMITTAL	02/02/2026
DSA SUBMITTAL V2	03/13/2026

Job Number	33366
Checked By	KS
Scale	1" = 20'

GRADING PLAN

C2.01

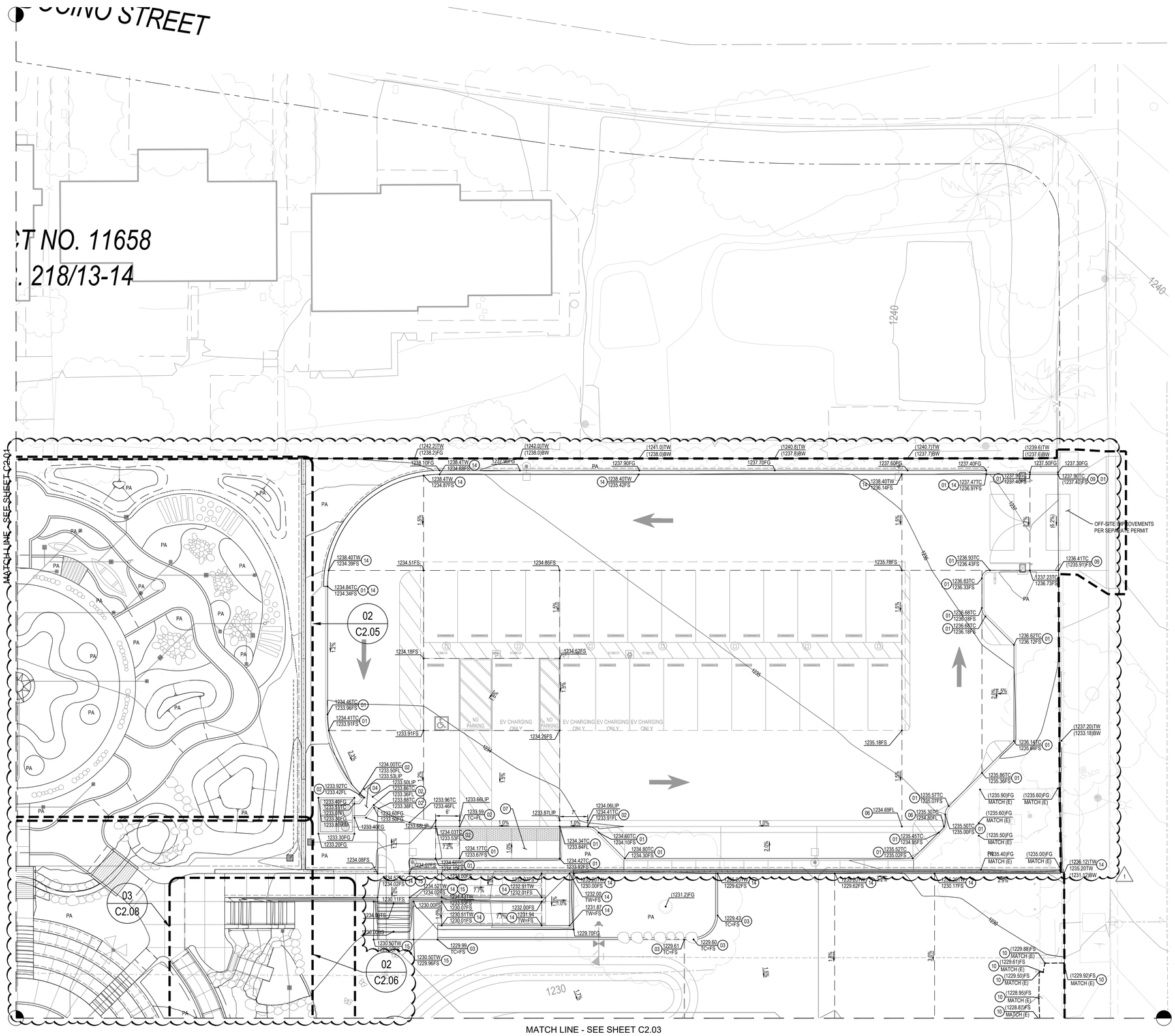

LEGEND

SYMBOL	DESCRIPTION
PA	PLANTING AREA SEE LANDSCAPE PLAN DETAILS FOR GRADES ADJACENT TO HARDSCAPE
	APPROXIMATE LIMIT OF WORK
GB	GRADE BREAK
	SAWCUT (E) PAVEMENT AS NEEDED. SEE DEMOLITION PLAN
	FLOWLINE
TOS	TOP OF SLOPE
TOE	TOE OF SLOPE

GRADING CONSTRUCTION NOTES

KEY NOTE	DESCRIPTION
01	CONSTRUCT VERTICAL CURB PER DETAIL 02 SHEET C7.01.
02	CONSTRUCT CURB AND GUTTER PER DETAIL 03 SHEET C7.01.
03	CONSTRUCT FLUSH CURB PER LANDSCAPE DETAIL 09 SHEET L5.01.
04	CONSTRUCT CURB OPENING AND LOCAL DEPRESSION PER PLAN.
06	CONSTRUCT VALLEY GUTTER PER DETAIL 04 SHEET C7.01.
07	CONSTRUCT ACCESSIBLE CURB RAMP PER DETAIL 17 SHEET C7.01.
09	JOIN EXISTING CURB AND/OR GUTTER AND MATCH GRADE.
10	JOIN EXISTING SIDEWALK AND MATCH EXISTING GRADE.
11	ADJUST EXISTING UTILITY RIM AND RISER TO FINISHED GRADE.
12	COLD MILL EDGES TO JOIN EXISTING ASPHALT PAVEMENT AND MATCH GRADE.
13	ADJUST EXISTING MANHOLE RIM TO FINISHED GRADE. MANHOLE CONE TO BE RAISED IF GRADE RINGS EXCEED ALLOWABLE HEIGHT FOR LADDER ACCESS.
14	CONSTRUCT CONCRETE RETAINING WALL PER LANDSCAPE DETAIL 01 SHEET L5.02.
15	CONSTRUCT COBBLESTONE FLUSH CURB PER LANDSCAPE DETAIL 24 SHEET L5.01.

GRADING NOTES

1. CONTRACTOR SHALL MAINTAIN POSITIVE DRAINAGE AWAY FROM THE EXISTING RETAINING WALL. DO NOT BURY, BLOCK, OR OBSTRUCT EXISTING WEEP HOLES. FINAL GRADE SHALL BE ESTABLISHED AT A MINIMUM OF 2 INCHES BELOW THE LOWEST WEEP HOLE OPENING.

N

0 5 10 20

GRADING PLAN 1" = 10' 01

LPA
ARCHITECTURE ENGINEERING INTERIOR DESIGN
LANDSCAPE ARCHITECTURE PLANNING
949-261-1001 Office
LPADesignStudios.com
5301 California Avenue, Suite 100
Irvine, California 92617

REGISTERED PROFESSIONAL ENGINEER
KATHLEEN M. SPINNEY
R.C.E. 68369
EXP. 9-30-27
CIVIL
STATE OF CALIFORNIA

THE JOBSON FAMILY FOUNDATION

CONCEPT DESIGN:
Landscape Architect
Helle Nebelong
Denmark
hellenebelong.com

This document and all other project documents, ideas, aesthetics and designs incorporated therein are instruments of service. All project documents are copyright protected, are the property of LPA, Inc. (LPA) and cannot be lawfully used in whole or in part for any project or purpose except as set forth in the contractual agreement between LPA and its Client. The unauthorized disclosure and/or use of the project documents (including the creation of derivative works), may give rise to liability for copyright infringement, unlawful disclosure, use or misappropriation of property rights held by LPA. The unauthorized use of the project documents will give rise to the recovery of monetary losses and damages including attorney fees and costs for which the unauthorized user will be held liable.
Project documents describe the design intent of the work and are not a representation of as-built or existing conditions. LPA is not responsible for any discrepancies between the project documents and the existing conditions.

© LPA, Inc.

ALTADENA ARTS MAGNET SCHOOL

743 E Calaveras ST.
Altadena, CA 91001

Developed for
PUSD

Revision	Date
ADDENDUM 1	04/28/2026

Submittal	Date
100% SCHEMATIC DESIGN	12/08/2025
DSA SUBMITTAL	02/02/2026
DSA SUBMITTAL V2	03/13/2026

Job Number	33366
Checked By	KS
Scale	1" = 20'

GRADING PLAN

C2.02

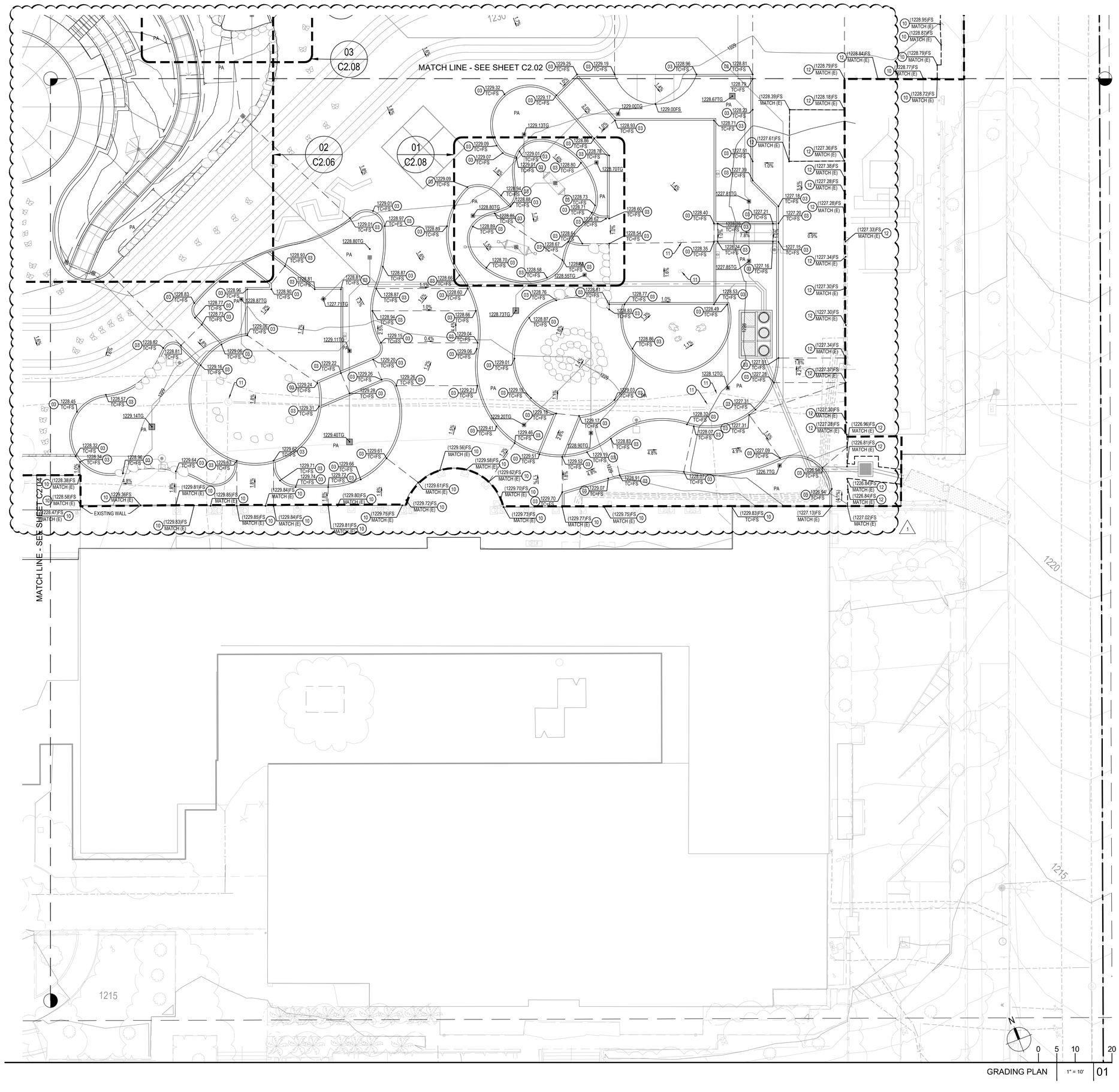

GRADING PLAN 1" = 10' 01

LEGEND

SYMBOL	DESCRIPTION
PA	PLANTING AREA SEE LANDSCAPE PLAN DETAILS FOR GRADES ADJACENT TO HARDSCAPE
	APPROXIMATE LIMIT OF WORK
GB	GRADE BREAK
	SAWCUT (E) PAVEMENT AS NEEDED. SEE DEMOLITION PLAN
	FLOWLINE
TOS	TOP OF SLOPE
TOE	TOE OF SLOPE

GRADING CONSTRUCTION NOTES

KEY NOTE	DESCRIPTION
01	CONSTRUCT VERTICAL CURB PER DETAIL 02 SHEET C7.01.
02	CONSTRUCT CURB AND GUTTER PER DETAIL 03 SHEET C7.01.
03	CONSTRUCT FLUSH CURB PER LANDSCAPE DETAIL 09 SHEET L5.01.
04	CONSTRUCT CURB OPENING AND LOCAL DEPRESSION PER PLAN
06	CONSTRUCT VALLEY GUTTER PER DETAIL 04 SHEET C7.01.
07	CONSTRUCT ACCESSIBLE CURB RAMP PER DETAIL 17 SHEET C7.01.
09	JOIN EXISTING CURB AND/OR GUTTER AND MATCH GRADE.
10	JOIN EXISTING SIDEWALK AND MATCH EXISTING GRADE.
11	ADJUST EXISTING UTILITY RIM AND RISER TO FINISHED GRADE.
12	COLD MILL EDGES TO JOIN EXISTING ASPHALT PAVEMENT AND MATCH GRADE.
13	ADJUST EXISTING MANHOLE RIM TO FINISHED GRADE. MANHOLE CONE TO BE RAISED IF GRADE RINGS EXCEED ALLOWABLE HEIGHT FOR LADDER ACCESS.
14	CONSTRUCT CONCRETE RETAINING WALL PER LANDSCAPE DETAIL 01 SHEET L5.02.
15	CONSTRUCT COBBLESTONE FLUSH CURB PER LANDSCAPE DETAIL 24 SHEET L5.01.

GRADING NOTES

1. CONTRACTOR SHALL MAINTAIN POSITIVE DRAINAGE AWAY FROM THE EXISTING RETAINING WALL. DO NOT BURY, BLOCK, OR OBSTRUCT EXISTING WEEP HOLES. FINAL GRADE SHALL BE ESTABLISHED AT A MINIMUM OF 2 INCHES BELOW THE LOWEST WEEP HOLE OPENING.

LPA
ARCHITECTURE ENGINEERING INTERIOR DESIGN
LANDSCAPE ARCHITECTURE PLANNING
949-261-1001 Office
LPADesignStudios.com
5301 California Avenue, Suite 100
Irvine, California 92617

REGISTERED PROFESSIONAL ENGINEER
KATHLEEN M. SPINNEY
R.C.E. 68369
EXP. 9-30-27
CIVIL
STATE OF CALIFORNIA

THE JOBSON FAMILY FOUNDATION

CONCEPT DESIGN:
Landscape Architect
Helle Nebelong
Denmark
hellenebelong.com

This document and all other project documents, ideas, aesthetics and designs incorporated therein are instruments of service. All project documents are copyright protected, are the property of LPA, Inc. (LPA) and cannot be lawfully used in whole or in part for any project or purpose except as set forth in the contractual agreement between LPA and its Client. The unauthorized disclosure and/or use of the project documents (including the creation of derivative works), may give rise to liability for copyright infringement, unlawful disclosure, use or misappropriation of property rights held by LPA. The unauthorized use of the project documents will give rise to the recovery of monetary losses and damages including attorney fees and costs for which the unauthorized user will be held liable.
Project documents describe the design intent of the work and are not a representation of as-built or existing conditions. LPA is not responsible for any discrepancies between the project documents and the existing conditions.

© LPA, Inc.

ALTADENA ARTS MAGNET SCHOOL

743 E Calaveras ST.
Altadena, CA 91001

Developed for
PUSD

Revision	Date
ADDENDUM 1	04/28/2026

Submittal	Date
100% SCHEMATIC DESIGN	12/08/2025
DSA SUBMITTAL	02/02/2026
DSA SUBMITTAL V2	03/13/2026

Job Number	33366
Checked By	KS
Scale	1" = 20'

GRADING PLAN

C2.03

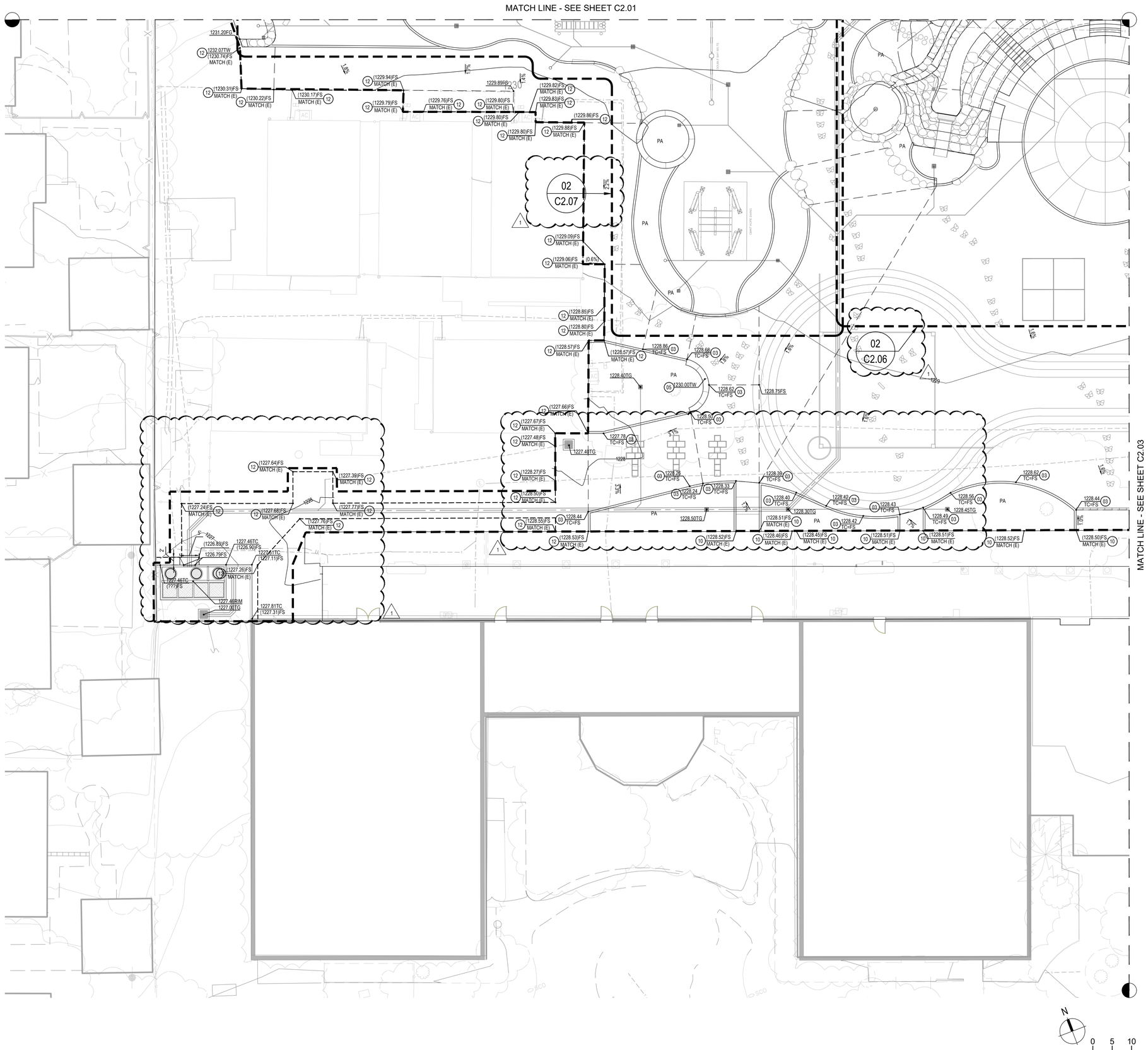

LEGEND

SYMBOL	DESCRIPTION
PA	PLANTING AREA SEE LANDSCAPE PLAN DETAILS FOR GRADES ADJACENT TO HARDSCAPE
	APPROXIMATE LIMIT OF WORK
GB	GRADE BREAK
	SAWCUT (E) PAVEMENT AS NEEDED. SEE DEMOLITION PLAN
	FLOWLINE
TOS	TOP OF SLOPE
TOE	TOE OF SLOPE

GRADING CONSTRUCTION NOTES

KEY NOTE	DESCRIPTION
01	CONSTRUCT VERTICAL CURB PER DETAIL 02 SHEET C7.01.
02	CONSTRUCT CURB AND GUTTER PER DETAIL 03 SHEET C7.01.
03	CONSTRUCT FLUSH CURB PER LANDSCAPE DETAIL 09 SHEET L5.01.
04	CONSTRUCT CURB OPENING AND LOCAL DEPRESSION PER PLAN.
06	CONSTRUCT VALLEY GUTTER PER DETAIL 04 SHEET C7.01.
07	CONSTRUCT ACCESSIBLE CURB RAMP PER DETAIL 17 SHEET C7.01.
09	JOIN EXISTING CURB AND/OR GUTTER AND MATCH GRADE.
10	JOIN EXISTING SIDEWALK AND MATCH EXISTING GRADE.
11	ADJUST EXISTING UTILITY RIM AND RISER TO FINISHED GRADE.
12	COLD MILL EDGES TO JOIN EXISTING ASPHALT PAVEMENT AND MATCH GRADE.
13	ADJUST EXISTING MANHOLE RIM TO FINISHED GRADE. MANHOLE CONE TO BE RAISED IF GRADE RINGS EXCEED ALLOWABLE HEIGHT FOR LADDER ACCESS.
14	CONSTRUCT CONCRETE RETAINING WALL PER LANDSCAPE DETAIL 01 SHEET L5.02.
15	CONSTRUCT COBBLESTONE FLUSH CURB PER LANDSCAPE DETAIL 24 SHEET L5.01.

GRADING NOTES

1. CONTRACTOR SHALL MAINTAIN POSITIVE DRAINAGE AWAY FROM THE EXISTING RETAINING WALL. DO NOT BURY, BLOCK, OR OBSTRUCT EXISTING WEEP HOLES. FINAL GRADE SHALL BE ESTABLISHED AT A MINIMUM OF 2 INCHES BELOW THE LOWEST WEEP HOLE OPENING.

LPA
ARCHITECTURE ENGINEERING INTERIOR DESIGN
LANDSCAPE ARCHITECTURE PLANNING
949-261-1001 Office
LPADesignStudios.com
5301 California Avenue, Suite 100
Irvine, California 92617
REGISTERED PROFESSIONAL ENGINEER
KATHLEEN M. SPANGLER
R.C.E. 68369
EXP. 9-30-27
CIVIL
STATE OF CALIFORNIA
THE JOBSON FAMILY FOUNDATION
CONCEPT DESIGN:
Landscape Architect
Helle Nebelong
Denmark
hellenebelong.com

This document and all other project documents, ideas, aesthetics and designs incorporated therein are instruments of service. All project documents are copyright protected, are the property of LPA, Inc. (LPA) and cannot be lawfully used in whole or in part for any project or purpose except as set forth in the contractual agreement between LPA and its Client. The unauthorized disclosure and/or use of the project documents (including the creation of derivative works), may give rise to liability for copyright infringement, unlawful disclosure, use or misappropriation of property rights held by LPA. The unauthorized use of the project documents will give rise to the recovery of monetary losses and damages including attorney fees and costs for which the unauthorized user will be held liable.
Project documents describe the design intent of the work and are not a representation of as-built or existing conditions. LPA is not responsible for any discrepancies between the project documents and the existing conditions.

© LPA, Inc.

ALTADENA ARTS MAGNET SCHOOL

743 E Calaveras ST.
Altadena, CA 91001

Developed for
PUSD

Revision	Date
ADDENDUM 1	04/28/2026

Submittal	Date
100% SCHEMATIC DESIGN	12/08/2025
DSA SUBMITTAL	02/02/2026
DSA SUBMITTAL V2	03/13/2026

Job Number	33366
Checked By	KS
Scale	1" = 20'

GRADING PLAN

C2.04

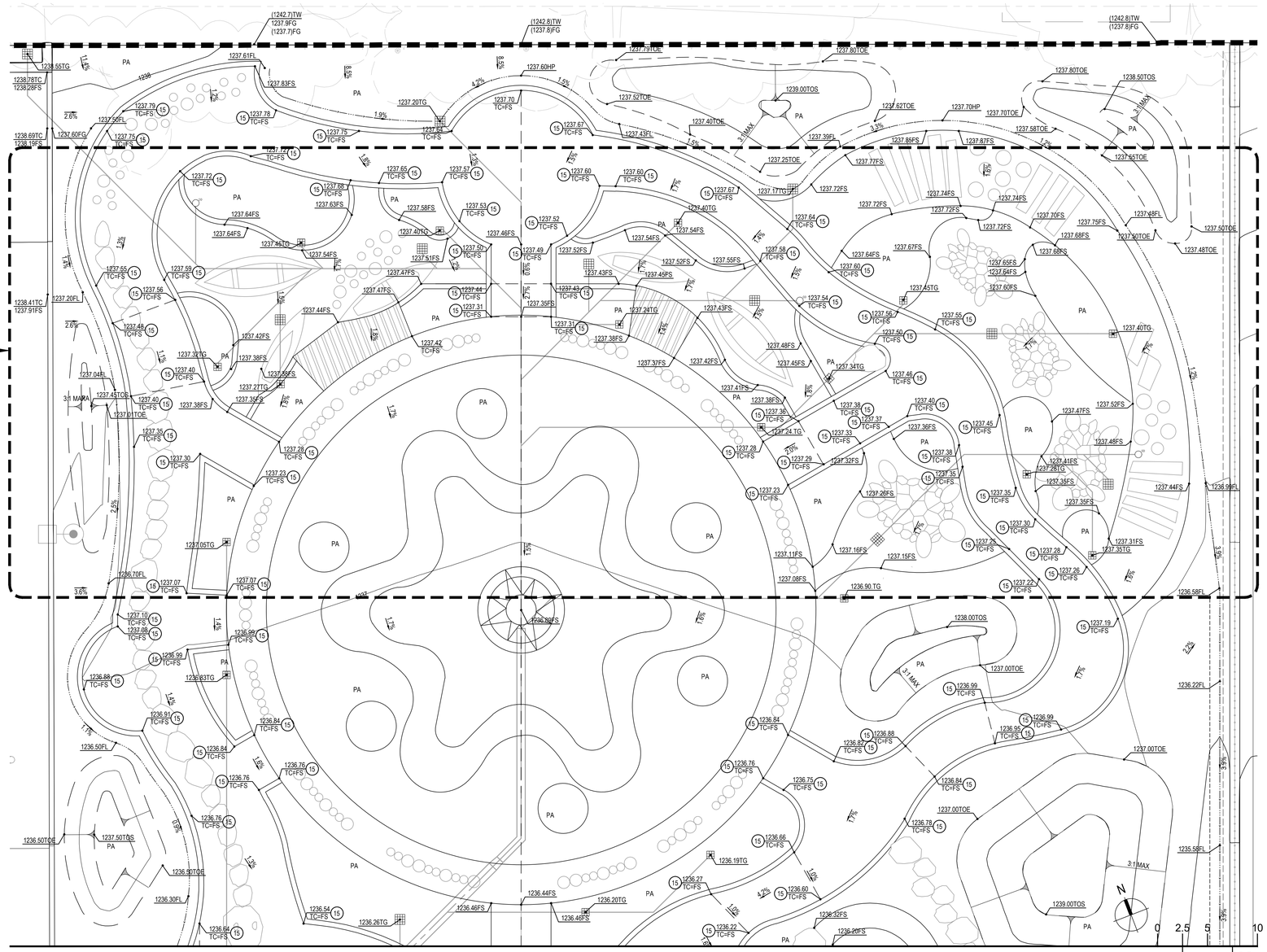

GRADING ENLARGEMENT PLAN 1" = 5' 02

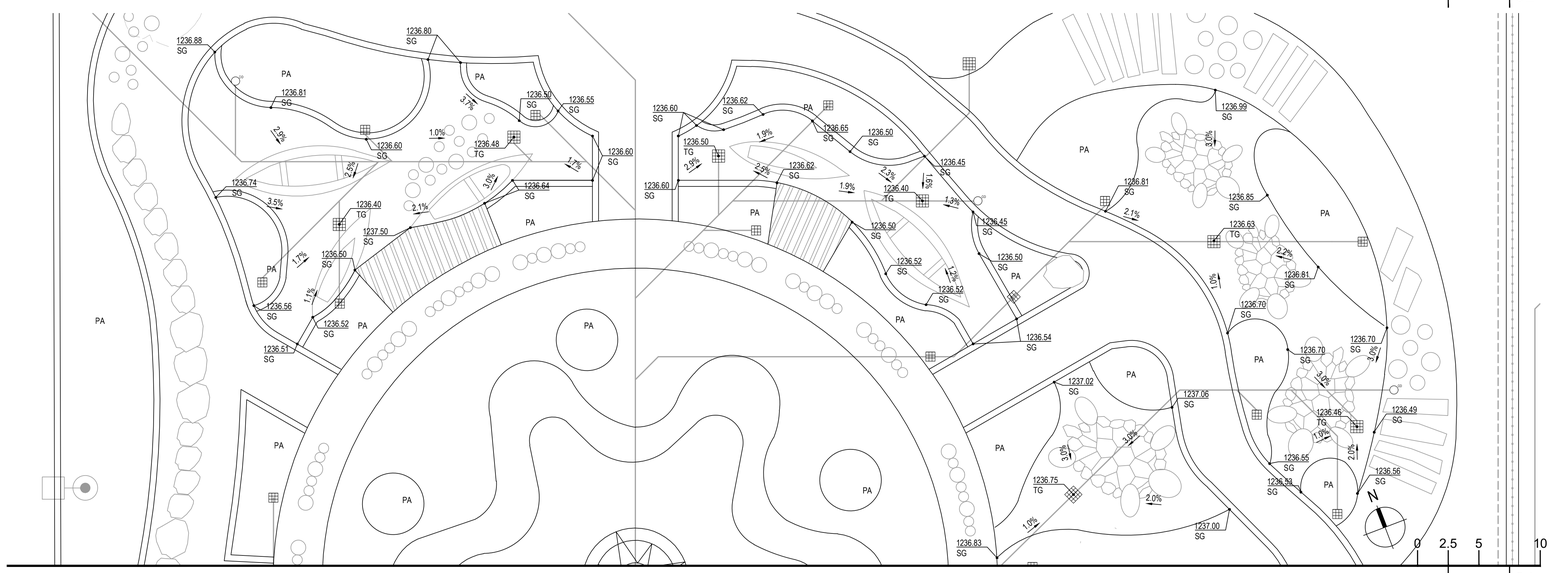

SUB-GRADING ENLARGEMENT PLAN 1" = 5' 01

LEGEND

SYMBOL	DESCRIPTION
PA	PLANTING AREA SEE LANDSCAPE PLAN DETAILS FOR GRADES ADJACENT TO HARDSCAPE
	APPROXIMATE LIMIT OF WORK
GB	GRADE BREAK
	SAWCUT (E) PAVEMENT AS NEEDED. SEE DEMOLITION PLAN
	FLOWLINE
TOS	TOP OF SLOPE
TOE	TOE OF SLOPE

GRADING CONSTRUCTION NOTES

KEY NOTE	DESCRIPTION
01	CONSTRUCT VERTICAL CURB PER DETAIL 02 SHEET C7.01.
02	CONSTRUCT CURB AND GUTTER PER DETAIL 03 SHEET C7.01.
03	CONSTRUCT FLUSH CURB PER LANDSCAPE DETAIL 09 SHEET L5.01.
04	CONSTRUCT CURB OPENING AND LOCAL DEPRESSION PER PLAN.
06	CONSTRUCT VALLEY GUTTER PER DETAIL 04 SHEET C7.01.
07	CONSTRUCT ACCESSIBLE CURB RAMP PER DETAIL 17 SHEET C7.01.
09	JOIN EXISTING CURB AND/OR GUTTER AND MATCH GRADE.
10	JOIN EXISTING SIDEWALK AND MATCH EXISTING GRADE.
11	ADJUST EXISTING UTILITY RIM AND RISER TO FINISHED GRADE.
12	COLD MILL EDGES TO JOIN EXISTING ASPHALT PAVEMENT AND MATCH GRADE.
13	ADJUST EXISTING MANHOLE RIM TO FINISHED GRADE. MANHOLE CONE TO BE RAISED IF GRADE RINGS EXCEED ALLOWABLE HEIGHT FOR LADDER ACCESS.
14	CONSTRUCT CONCRETE RETAINING WALL PER LANDSCAPE DETAIL 01 SHEET L5.02.
15	CONSTRUCT COBBLESTONE FLUSH CURB PER LANDSCAPE DETAIL 24 SHEET L5.01.

GRADING NOTES

1. CONTRACTOR SHALL MAINTAIN POSITIVE DRAINAGE AWAY FROM THE EXISTING RETAINING WALL. DO NOT BURY, BLOCK, OR OBSTRUCT EXISTING WEEP HOLES. FINAL GRADE SHALL BE ESTABLISHED AT A MINIMUM OF 2 INCHES BELOW THE LOWEST WEEP HOLE OPENING.

LPA

ARCHITECTURE ENGINEERING INTERIOR DESIGN
LANDSCAPE ARCHITECTURE PLANNING

949-261-1001 Office

LPADesignStudios.com

5301 California Avenue, Suite 100
Irvine, California 92617

REGISTERED PROFESSIONAL ENGINEER
KATHLEEN M. SPINAK
R.C.E. 68369
EXP. 9-30-27
CIVIL
STATE OF CALIFORNIA

THE JOBSON FAMILY FOUNDATION

CONCEPT DESIGN:
Landscape Architect
Helle Nebelong
Denmark
hellenebelong.com

This document and all other project documents, ideas, aesthetics and designs incorporated therein are instruments of service. All project documents are copyright protected, are the property of LPA, Inc. (LPA) and cannot be lawfully used in whole or in part for any project or purpose except as set forth in the contractual agreement between LPA and its Client. The unauthorized disclosure and/or use of the project documents (including the creation of derivative works), may give rise to liability for copyright infringement, unlawful disclosure, use or misappropriation of property rights held by LPA. The unauthorized use of the project documents will give rise to the recovery of monetary losses and damages including attorney fees and costs for which the unauthorized user will be held liable.
Project documents describe the design intent of the work and are not a representation of as-built or existing conditions. LPA is not responsible for any discrepancies between the project documents and the existing conditions.

© LPA, Inc.

ALTADENA ARTS MAGNET SCHOOL

743 E Calaveras ST.
Altadena, CA 91001

Developed for
PUSD

Revision	Date
ADDENDUM 1	04/28/2026

Submittal	Date
100% SCHEMATIC DESIGN	12/08/2025
DSA SUBMITTAL	02/02/2026
DSA SUBMITTAL V2	03/13/2026

Job Number	33366
Checked By	KS
Scale	1" = 5'

GRADING
ENLARGEMENT PLAN

C2.05

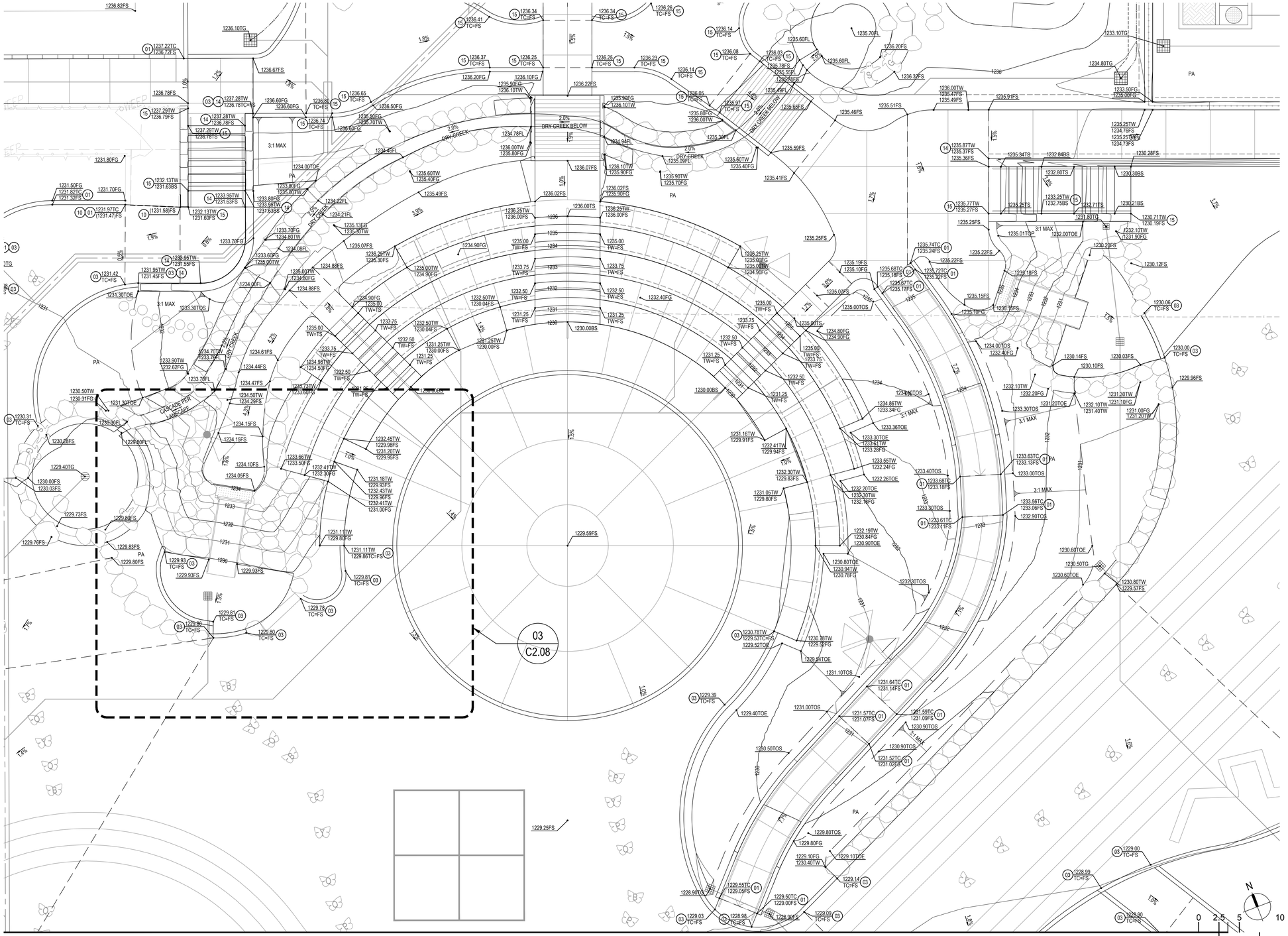

GRADING ENLARGEMENT PLAN 02

LEGEND

SYMBOL	DESCRIPTION
PA	PLANTING AREA SEE LANDSCAPE PLAN DETAILS FOR GRADES ADJACENT TO HARDSCAPE
	APPROXIMATE LIMIT OF WORK
GB	GRADE BREAK
	SAWCUT (E) PAVEMENT AS NEEDED. SEE DEMOLITION PLAN
	FLOWLINE
TOS	TOP OF SLOPE
TOE	TOE OF SLOPE

GRADING CONSTRUCTION NOTES

KEY NOTE	DESCRIPTION
01	CONSTRUCT VERTICAL CURB PER DETAIL 02 SHEET C7.01.
02	CONSTRUCT CURB AND GUTTER PER DETAIL 03 SHEET C7.01.
03	CONSTRUCT FLUSH CURB PER LANDSCAPE DETAIL 09 SHEET L5.01.
04	CONSTRUCT CURB OPENING AND LOCAL DEPRESSION PER PLAN.
06	CONSTRUCT VALLEY GUTTER PER DETAIL 04 SHEET C7.01.
07	CONSTRUCT ACCESSIBLE CURB RAMP PER DETAIL 17 SHEET C7.01.
09	JOIN EXISTING CURB AND/OR GUTTER AND MATCH GRADE.
10	JOIN EXISTING SIDEWALK AND MATCH EXISTING GRADE.
11	ADJUST EXISTING UTILITY RIM AND RISER TO FINISHED GRADE.
12	COLD MILL EDGES TO JOIN EXISTING ASPHALT PAVEMENT AND MATCH GRADE.
13	ADJUST EXISTING MANHOLE RIM TO FINISHED GRADE. MANHOLE CONE TO BE RAISED IF GRADE RINGS EXCEED ALLOWABLE HEIGHT FOR LADDER ACCESS.
14	CONSTRUCT CONCRETE RETAINING WALL PER LANDSCAPE DETAIL 01 SHEET L5.02.
15	CONSTRUCT COBBLESTONE FLUSH CURB PER LANDSCAPE DETAIL 24 SHEET L5.01.

GRADING NOTES

1. CONTRACTOR SHALL MAINTAIN POSITIVE DRAINAGE AWAY FROM THE EXISTING RETAINING WALL. DO NOT BURY, BLOCK, OR OBSTRUCT EXISTING WEEP HOLES. FINAL GRADE SHALL BE ESTABLISHED AT A MINIMUM OF 2 INCHES BELOW THE LOWEST WEEP HOLE OPENING.

LPA
ARCHITECTURE ENGINEERING INTERIOR DESIGN
LANDSCAPE ARCHITECTURE PLANNING
949-261-1001 Office
LPADesignStudios.com
5301 California Avenue, Suite 100
Irvine, California 92617
REGISTERED PROFESSIONAL ENGINEER KATHLEEN M. SPINAZZI R.C.E. 68369 EXP. 9-30-27 CIVIL STATE OF CALIFORNIA

THE JOBSON FAMILY FOUNDATION

CONCEPT DESIGN:
Landscape Architect
Helle Nebelong
Denmark
hellenebelong.com

This document and all other project documents, ideas, aesthetics and designs incorporated therein are instruments of service. All project documents are copyright protected, are the property of LPA, Inc. (LPA) and cannot be lawfully used in whole or in part for any project or purpose except as set forth in the contractual agreement between LPA and its Client. The unauthorized disclosure and/or use of the project documents (including the creation of derivative works), may give rise to liability for copyright infringement, unlawful disclosure, use or misappropriation of property rights held by LPA. The unauthorized use of the project documents will give rise to the recovery of monetary losses and damages including attorney fees and costs for which the unauthorized user will be held liable.
Project documents describe the design intent of the work and are not a representation of as-built or existing conditions. LPA is not responsible for any discrepancies between the project documents and the existing conditions.

© LPA, Inc.

ALTADENA ARTS MAGNET SCHOOL

743 E Calaveras ST.
Altadena, CA 91001

Developed for
PUSD

Revision	Date
ADDENDUM 1	04/28/2026

Submittal	Date
100% SCHEMATIC DESIGN	12/08/2025
DSA SUBMITTAL	02/02/2026
DSA SUBMITTAL V2	03/13/2026

Job Number	33366
Checked By	KS
Scale	1" = 5'

GRADING ENLARGEMENT PLAN

C2.06

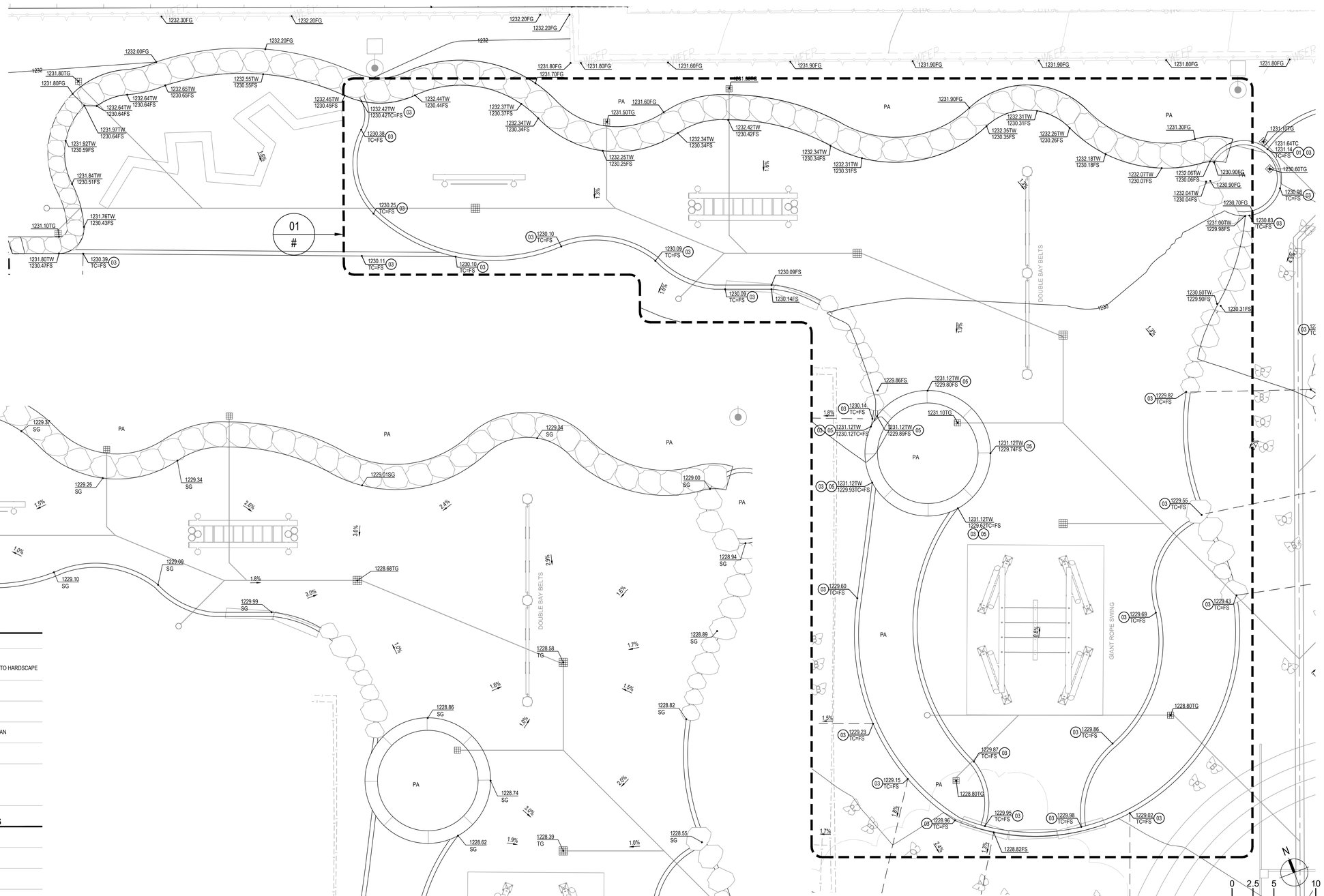

GRADING ENLARGEMENT PLAN 1" = 5' 02

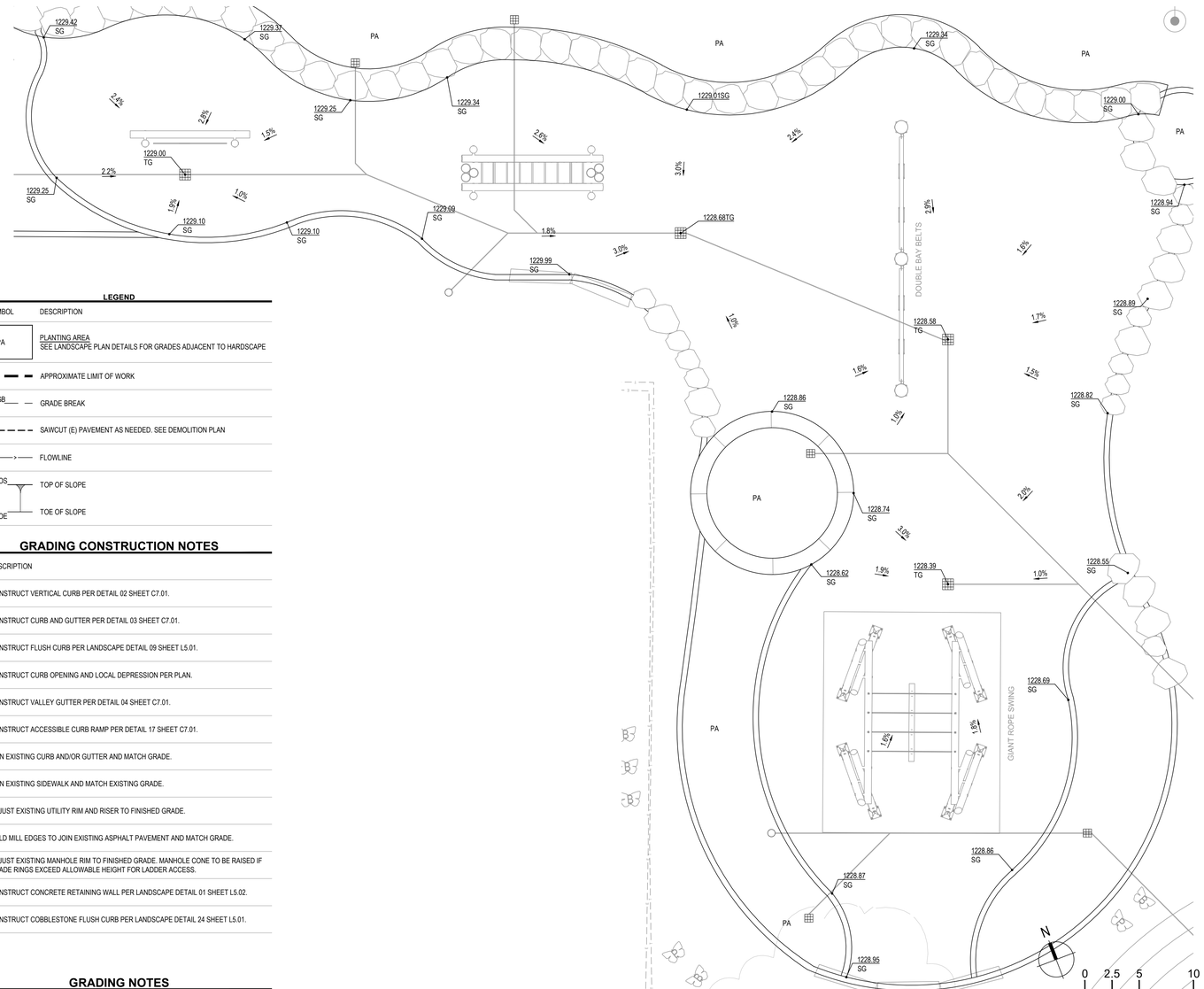

SUB-GRADING ENLARGEMENT PLAN 1" = 5' 01

LEGEND

SYMBOL	DESCRIPTION
PA	PLANTING AREA SEE LANDSCAPE PLAN DETAILS FOR GRADES ADJACENT TO HARDSCAPE
— — —	APPROXIMATE LIMIT OF WORK
— GB —	GRADE BREAK
— — — —	SAWCUT (E) PAVEMENT AS NEEDED. SEE DEMOLITION PLAN
—— · · · ——›	FLOWLINE
TOS	TOP OF SLOPE
TOE	TOE OF SLOPE

GRADING CONSTRUCTION NOTES

KEY NOTE	DESCRIPTION
01	CONSTRUCT VERTICAL CURB PER DETAIL 02 SHEET C7.01.
02	CONSTRUCT CURB AND GUTTER PER DETAIL 03 SHEET C7.01.
03	CONSTRUCT FLUSH CURB PER LANDSCAPE DETAIL 09 SHEET L5.01.
04	CONSTRUCT CURB OPENING AND LOCAL DEPRESSION PER PLAN.
06	CONSTRUCT VALLEY GUTTER PER DETAIL 04 SHEET C7.01.
07	CONSTRUCT ACCESSIBLE CURB RAMP PER DETAIL 17 SHEET C7.01.
09	JOIN EXISTING CURB AND/OR GUTTER AND MATCH GRADE.
10	JOIN EXISTING SIDEWALK AND MATCH EXISTING GRADE.
11	ADJUST EXISTING UTILITY RIM AND RISER TO FINISHED GRADE.
12	COLD MILL EDGES TO JOIN EXISTING ASPHALT PAVEMENT AND MATCH GRADE.
13	ADJUST EXISTING MANHOLE RIM TO FINISHED GRADE. MANHOLE CONE TO BE RAISED IF GRADE RINGS EXCEED ALLOWABLE HEIGHT FOR LADDER ACCESS.
14	CONSTRUCT CONCRETE RETAINING WALL PER LANDSCAPE DETAIL 01 SHEET L5.02.
15	CONSTRUCT COBBLESTONE FLUSH CURB PER LANDSCAPE DETAIL 24 SHEET L5.01.

GRADING NOTES

1. CONTRACTOR SHALL MAINTAIN POSITIVE DRAINAGE AWAY FROM THE EXISTING RETAINING WALL. DO NOT BURY, BLOCK, OR OBSTRUCT EXISTING WEEP HOLES. FINAL GRADE SHALL BE ESTABLISHED AT A MINIMUM OF 2 INCHES BELOW THE LOWEST WEEP HOLE OPENING.

LPA
ARCHITECTURE ENGINEERING INTERIOR DESIGN
LANDSCAPE ARCHITECTURE PLANNING
949-261-1001 Office
LPADesignStudios.com
5301 California Avenue, Suite 100
Irvine, California 92617

REGISTERED PROFESSIONAL ENGINEER
KATHLEEN M. SPINAR
R.C.E. 68369
EXP. 9-30-27
CIVIL
STATE OF CALIFORNIA

THE JOBSON FAMILY FOUNDATION

CONCEPT DESIGN:
Landscape Architect
Helle Nebelong
Denmark
hellenebelong.com

This document and all other project documents, ideas, aesthetics and designs incorporated therein are instruments of service. All project documents are copyright protected, are the property of LPA, Inc. (LPA) and cannot be lawfully used in whole or in part for any project or purpose except as set forth in the contractual agreement between LPA and its Client. The unauthorized disclosure and/or use of the project documents (including the creation of derivative works), may give rise to liability for copyright infringement, unlawful disclosure, use or misappropriation of property rights held by LPA. The unauthorized use of the project documents will give rise to the recovery of monetary losses and damages including attorney fees and costs for which the unauthorized user will be held liable.
Project documents describe the design intent of the work and are not a representation of as-built or existing conditions. LPA is not responsible for any discrepancies between the project documents and the existing conditions.

© LPA, Inc.

ALTADENA ARTS MAGNET SCHOOL

743 E Calaveras ST.
Altadena, CA 91001

Developed for
PUSD

Revision	Date
ADDENDUM 1	04/28/2026

Submittal	Date
100% SCHEMATIC DESIGN	12/08/2025
DSA SUBMITTAL	02/02/2026
DSA SUBMITTAL 1/2	03/13/2026

Job Number	33366
Checked By	KS
Scale	1" = 5'

GRADING ENLARGEMENT PLAN

C2.07

LEGEND

SYMBOL	DESCRIPTION
PA	PLANTING AREA SEE LANDSCAPE PLAN DETAILS FOR GRADES ADJACENT TO HARDSCAPE
	APPROXIMATE LIMIT OF WORK
GB	GRADE BREAK
	SAWCUT (E) PAVEMENT AS NEEDED. SEE DEMOLITION PLAN
	FLOWLINE
TOS	TOP OF SLOPE
TOE	TOE OF SLOPE

GRADING CONSTRUCTION NOTES

KEY NOTE	DESCRIPTION
01	CONSTRUCT VERTICAL CURB PER DETAIL 02 SHEET C7.01.
02	CONSTRUCT CURB AND GUTTER PER DETAIL 03 SHEET C7.01.
03	CONSTRUCT FLUSH CURB PER LANDSCAPE DETAIL 09 SHEET L5.01.
04	CONSTRUCT CURB OPENING AND LOCAL DEPRESSION PER PLAN.
06	CONSTRUCT VALLEY GUTTER PER DETAIL 04 SHEET C7.01.
07	CONSTRUCT ACCESSIBLE CURB RAMP PER DETAIL 17 SHEET C7.01.
09	JOIN EXISTING CURB AND/OR GUTTER AND MATCH GRADE.
10	JOIN EXISTING SIDEWALK AND MATCH EXISTING GRADE.
11	ADJUST EXISTING UTILITY RIM AND RISER TO FINISHED GRADE.
12	COLD MILL EDGES TO JOIN EXISTING ASPHALT PAVEMENT AND MATCH GRADE.
13	ADJUST EXISTING MANHOLE RIM TO FINISHED GRADE. MANHOLE CONE TO BE RAISED IF GRADE RINGS EXCEED ALLOWABLE HEIGHT FOR LADDER ACCESS.
14	CONSTRUCT CONCRETE RETAINING WALL PER LANDSCAPE DETAIL 01 SHEET L5.02.
15	CONSTRUCT COBBLESTONE FLUSH CURB PER LANDSCAPE DETAIL 24 SHEET L5.01.

GRADING NOTES

1. CONTRACTOR SHALL MAINTAIN POSITIVE DRAINAGE AWAY FROM THE EXISTING RETAINING WALL. DO NOT BURY, BLOCK, OR OBSTRUCT EXISTING WEEP HOLES. FINAL GRADE SHALL BE ESTABLISHED AT A MINIMUM OF 2 INCHES BELOW THE LOWEST WEEP HOLE OPENING.

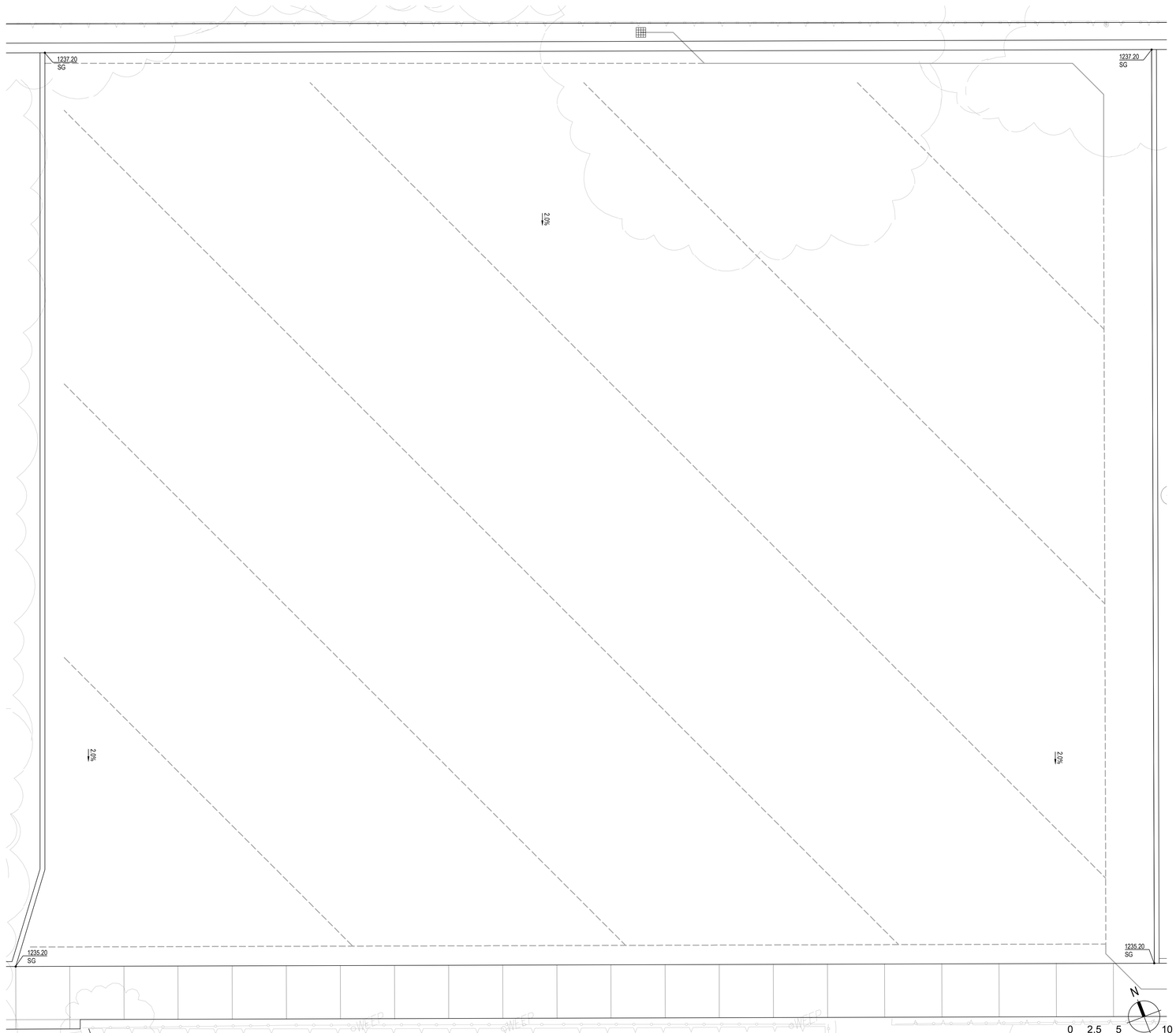

SUB-GRADING ENLARGEMENT PLAN 1" = 5' 04

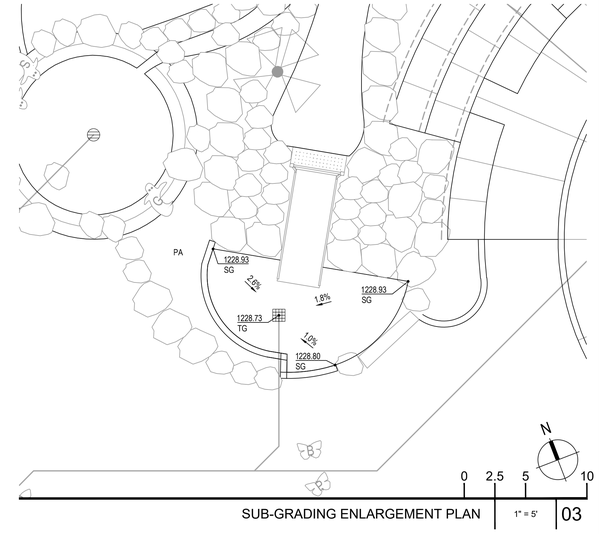

SUB-GRADING ENLARGEMENT PLAN 1" = 5' 03

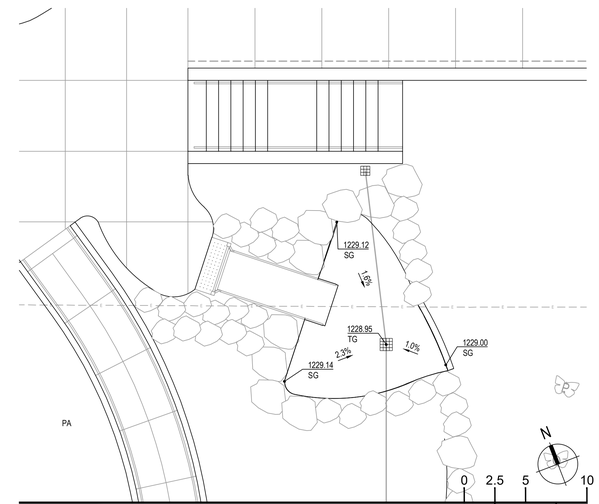

SUB-GRADING ENLARGEMENT PLAN 1" = 5' 02

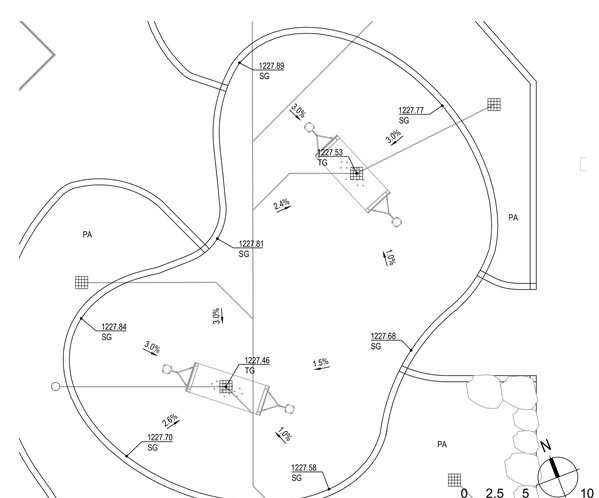

SUB-GRADING ENLARGEMENT PLAN 1" = 5' 01

LPA
ARCHITECTURE ENGINEERING INTERIOR DESIGN
LANDSCAPE ARCHITECTURE PLANNING
949-261-1001 Office
LPADesignStudios.com
5301 California Avenue, Suite 100
Irvine, California 92617

REGISTERED PROFESSIONAL ENGINEER
KATHLEEN M. SPANGLER
R.C.E. 68369
EXP. 9-30-27
CIVIL
STATE OF CALIFORNIA

THE JOBSON FAMILY FOUNDATION

CONCEPT DESIGN:
Landscape Architect
Helle Nebelong
Denmark
hellenebelong.com

This document and all other project documents, ideas, aesthetics and designs incorporated therein are instruments of service. All project documents are copyright protected, are the property of LPA, Inc. (LPA) and cannot be lawfully used in whole or in part for any project or purpose except as set forth in the contractual agreement between LPA and its Client. The unauthorized disclosure and/or use of the project documents (including the creation of derivative works), may give rise to liability for copyright infringement, unlawful disclosure, use or misappropriation of property rights held by LPA. The unauthorized use of the project documents will give rise to the recovery of monetary losses and damages including attorney fees and costs for which the unauthorized user will be held liable.
Project documents describe the design intent of the work and are not a representation of as-built or existing conditions. LPA is not responsible for any discrepancies between the project documents and the existing conditions.

© LPA, Inc.

ALTADENA ARTS MAGNET SCHOOL

743 E Calaveras ST.
Altadena, CA 91001

Developed for
PUSD

Revision	Date
ADDENDUM 1	04/28/2026

Submittal	Date
100% SCHEMATIC DESIGN	12/08/2025
DSA SUBMITTAL	02/02/2026
DSA SUBMITTAL V2	03/13/2026

Job Number	33366
Checked By	KS
Scale	1" = 5'

GRADING
ENLARGEMENT PLAN

C2.08

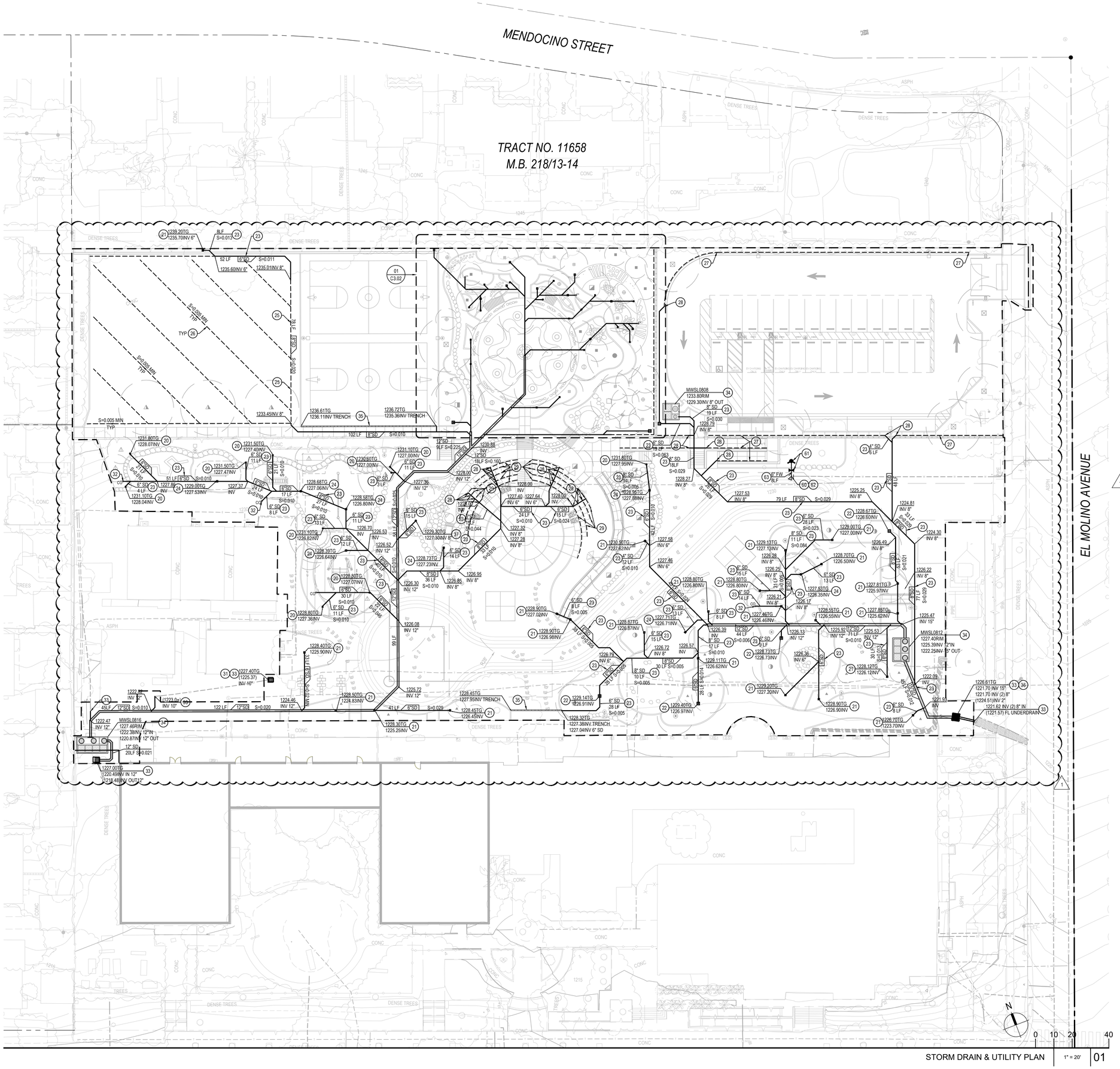

STORM DRAIN & UTILITY PLAN | 1" = 20' | 01

STORM DRAIN CONSTRUCTION NOTES

KEY NOTE	DESCRIPTION
20	SUPPLY AND INSTALL 9" x 9" ATRIUM GRATE PER DETAIL 13 SHEET C7.01.
21	SUPPLY AND INSTALL 12"X12" ATRIUM DRAIN PER DETAIL 13 SHEET C7.01.
22	SUPPLY AND INSTALL 18" X 18" ATRIUM DRAIN PER DETAIL 13 SHEET C7.01.
23	SUPPLY AND INSTALL PVC STORM DRAIN WITH SLOPE PER PLAN (S=0.005 MINIMUM, U.N.O). PIPE SIZE PER PLAN.
24	SUPPLY AND INSTALL 12" NDS AREA DRAIN AT SUBGRADE PER DETAIL 21 SHEET C7.01. CONTRACTOR TO MAINTAIN MINIMUM 1% SLOPE TO A DRAIN FROM ALL POINTS OF THE SUBGRADE. CONTINUE PER LANDSCAPE DETAIL 15 SHEET L5.01.
25	SUPPLY AND INSTALL PERFORATED PERIMETER SUBDRAIN AT NATURAL TURF FIELD PER DETAIL19 SHEET C7.01. PIPE SIZE PER PLAN.
26	SUPPLY AND INSTALL MULTI-FLOW 1200 DRAIN PIPE SPACED 20' ON CENTER. SEE DETAIL 06 SHEET L5.05. INSTALL FITTINGS PER MANUFACTURER'S RECOMMENDATIONS.
27	SUPPLY AND INSTALL 4" PERFORATED PIPE WRAPPED IN FILTER FABRIC AT FOOTING OF WALL S=0.010 MIN DAYLIGHT OUTLET AT TOE OF SLOPE. SEE LANDSCAPE DETAIL 01, SHEET L5.02.
28	CONNECT TO PERFORATED PIPE BENEATH SEAT WALL BEHIND RETAINING WALL.
29	SUPPLY AND INSTALL 4" PERFORATED PIPE WRAPPED IN FILTER FABRIC. S=0.010 MIN TO CONNECTION POINT. SEE LANDSCAPE DETAIL 02, SHEET L5.04.
30	SUPPLY AND INSTALL DRYWELL FOR DRINKING FOUNTAIN. SEE DETAIL 14 SHEET C7.01. CONNECT TO DRINKING FOUNTAIN WITH 2" SCH 40 DRAIN PIPE, S=0.010 MIN
31	SUPPLY AND INSTALL 24" X 24" CATCH BASIN PER DEAIL 16 SHEET C7.01
32	SUPPLY AND INSTALL STORM DRAIN CLEANOUT PER DETAIL 18 SHEET C7.01.
33	CONNECT TO EXISTING STORM DRAIN. CONTRACTOR TO VERIFY ELEVATION OF EXISTING PIPE AND NOTIFY ENGINEER OF ANY DISCREPANCIES PRIOR TO CONSTRUCTION.
34	SUPPLY AND INSTALL MODULAR WETLANDS STRUCTURE PER DETAIL 01 SHEET C7.02.
35	SUPPLY AND INSTALL 4" TRENCH DRAIN. ACO DRAIN MODEL 4000-3 WITH PERFORATED HEEL PROOF GRATE. EMBED IN CONCRETE PER MANUFACTURE'S RECOMMENDATIONS. CONNECT TO ADJACENT STORM DRAIN PER PLAN. SEE DETAIL 02 SHEET C7.02.
36	SUPPLY AND INSTALL 36" X 36" CATCH BASIN PER DEAIL 16 SHEET C7.01
37	SUPPLY AND INSTALL 6" ROUND PLANTER DRAIN PER DETAIL 16 SHEET C7.01.

FIRE WATER CONSTRUCTION NOTES:

60	CONNECT TO EXISTING 8" WATER LINE WITH FLANGED COUPLING ADAPTER USING STAINLESS STEEL NUTS, BOLTS, AND WASHERS. CONTRACTOR TO VERIFY SIZE AND LOCATION OF EXISTING WATER LINE AND NOTIFY ENGINEER OF ANY DISCREPANCIES PRIOR TO CONSTRUCTION.
61	REINSTALL FIRE HYDRANT AND GATE VALVE PER DETAIL 07 SHEET C7.02.
62	SUPPLY AND INSTALL THRUST BLOCKING PER DETAIL 08 SHEET C7.02.
63	SUPPLY AND INSTALL PVC C900 DR-14 WITH 30" MIN COVER AND 36" MIN COVER WHERE SURFACE LOADS ARE EXPECTED.

CONSTRUCTION NOTES:

1. UTILITIES TO CROSS OVER OR UNDER OTHER UTILITIES TO MAINTAIN 12" MINIMUM CLEARANCE AT UTILITY CROSSINGS, UNLESS NOTED OTHERWISE.
2. CONTRACTOR SHALL VERIFY SIZE AND LOCATION (HORIZONTAL AND VERTICAL) OF EXISTING CROSSING AND JOINING UTILITIES PRIOR TO CONSTRUCTION AND IMMEDIATELY NOTIFY THE ENGINEER OF ANY CONFLICT.
3. CONTRACTOR SHALL CONSTRUCT GRAVITY UTILITIES (SEWER AND STORM DRAIN) BEFORE OTHER UTILITIES. CONSTRUCTION OF THESE GRAVITY UTILITIES TO START FROM THE DOWNSTREAM ENDS.
4. EXISTING UTILITIES ARE COMPILED BASED ON PREVIOUS BASE FILES, FIELD SURVEY AND FIELD VERIFICATION. POTHOLING IS RECOMMENDED TO VERIFY ANY AND ALL UTILITIES KNOWN OR UNKNOWN WHICH MAY BE IN CONFLICT WITH PROPOSED CONSTRUCTION.
5. PRIOR TO THE REMOVAL OF ANY WET OR DRY UTILITY LINES, THE CONTRACTOR SHALL CONFIRM WITH OWNER REPRESENTATIVE WHETHER THESE UTILITY LINES ARE STILL ACTIVE OR NOT. IMMEDIATELY NOTIFY THE ENGINEER OF ANY CONFLICT.
6. CONTRACTOR TO ADJUST TO FINISHED GRADE ALL EXISTING UTILITY BOXES, STORM DRAIN CLEANOUT COVERS, PULL BOXES AND VALVE COVERS NOT SPECIFICALLY SHOWN WITHIN THE LIMITS OF WORK.
7. SEE DETAIL 12 SHEET C7.01 FOR STORM DRAIN UTILITY TRENCHING AND BACKFILL.
8. SAWCUT, REMOVE AND REPLACE EXISTING CURB AS REQUIRED FOR TRENCHING. MATCH EXISTING CURB.
9. ALL PRECAST DRAIN INLETS TO HAVE AN APPROVED "NO DUMPING DRAINS TO THE OCEAN 3" X 5¾" ROUNDED CORNERED RECTANGLES STYLE #NDO OR 4" DIAMETER ROUND STYLE #SDO ABRASION AND UV RESISTANT DURACAST STYLE MARKER BY DAS MANUFACTURING OR EQUIVALENT APPLIED TO THE CONCRETE COLLAR AROUND DRAIN INLET USING RAPID SET URETHANE ADHESIVE OR QUICKSTIK EPOXY PUTTY ADHESIVE PER MANUFACTURER'S RECOMMENDATIONS AND SPECIFICATIONS.
http://www.dasmanufacturing.com/product_guide.html

LPA
ARCHITECTURE ENGINEERING INTERIOR DESIGN
LANDSCAPE ARCHITECTURE PLANNING
949-261-1001 Office
LPADesignStudios.com
5301 California Avenue, Suite 100
Irvine, California 92617
REGISTERED PROFESSIONAL ENGINEER KATHLEEN M. SPINNEY R.C.E. 68369 EXP. 9-30-27 CIVIL STATE OF CALIFORNIA
THE JOBSON FAMILY FOUNDATION
CONCEPT DESIGN:
Landscape Architect
Helle Nebelong
Denmark
hellenebelong.com

This document and all other project documents, ideas, aesthetics and designs incorporated therein are instruments of service. All project documents are copyright protected, are the property of LPA, Inc. (LPA) and cannot be lawfully used in whole or in part for any project or purpose except as set forth in the contractual agreement between LPA and its Client. The unauthorized disclosure and/or use of the project documents (including the creation of derivative works), may give rise to liability for copyright infringement, unlawful disclosure, use or misappropriation of property rights held by LPA. The unauthorized use of the project documents will give rise to the recovery of monetary losses and damages including attorney fees and costs for which the unauthorized user will be held liable.
Project documents describe the design intent of the work and are not a representation of as-built or existing conditions. LPA is not responsible for any discrepancies between the project documents and the existing conditions.
© LPA, Inc.

ALTADENA ARTS MAGNET SCHOOL

743 E Calaveras ST.
Altadena, CA 91001

Developed for
PUSD

Revision	Date
ADDENDUM 1	04/28/2026

Submittal	Date
100% SCHEMATIC DESIGN	12/08/2025
DSA SUBMITTAL	02/02/2026
DSA SUBMITTAL V2	03/13/2026

Job Number	33366
Checked By	KS
Scale	1" = 20'

STORM DRAIN & UTILITY PLAN

C3.01

STORM DRAIN CONSTRUCTION NOTES

KEY NOTE	DESCRIPTION
20	SUPPLY AND INSTALL 9" x 9" ATRIUM GRATE PER DETAIL 13 SHEET C7.01.
21	SUPPLY AND INSTALL 12"X12" ATRIUM DRAIN PER DETAIL 13 SHEET C7.01.
22	SUPPLY AND INSTALL 18" X 18" ATRIUM DRAIN PER DETAIL 13 SHEET C7.01.
23	SUPPLY AND INSTALL PVC STORM DRAIN WITH SLOPE PER PLAN (S=0.005 MINIMUM, U.N.O). PIPE SIZE PER PLAN.
24	SUPPLY AND INSTALL 12" NDS AREA DRAIN AT SUBGRADE PER DETAIL 21 SHEET C7.01. CONTRACTOR TO MAINTAIN MINIMUM 1% SLOPE TO A DRAIN FROM ALL POINTS OF THE SUBGRADE. CONTINUE PER LANDSCAPE DETAIL 15 SHEET L5.01.
25	SUPPLY AND INSTALL PERFORATED PERIMETER SUBDRAIN AT NATURAL TURF FIELD PER DETAIL19 SHEET C7.01. PIPE SIZE PER PLAN.
26	SUPPLY AND INSTALL MULTI-FLOW 1200 DRAIN PIPE SPACED 20' ON CENTER. SEE DETAIL 06 SHEET L5.05. INSTALL FITTINGS PER MANUFACTURER'S RECOMMENDATIONS.
27	SUPPLY AND INSTALL 4" PERFORATED PIPE WRAPPED IN FILTER FABRIC AT FOOTING OF WALL S=0.010 MIN DAYLIGHT OUTLET AT TOE OF SLOPE. SEE LANDSCAPE DETAIL 01, SHEET L5.02.
28	CONNECT TO PERFORATED PIPE BENEATH SEAT WALL/BEHIND RETAINING WALL
29	SUPPLY AND INSTALL 4" PERFORATED PIPE WRAPPED IN FILTER FABRIC. S=0.010 MIN TO CONNECTION POINT. SEE LANDSCAPE DETAIL 02, SHEET L5.04.
30	SUPPLY AND INSTALL DRYWELL FOR DRINKING FOUNTAIN. SEE DETAIL 14 SHEET C7.01. CONNECT TO DRINKING FOUNTAIN WITH 2" SCH 40 DRAIN PIPE, S=0.010 MIN
31	SUPPLY AND INSTALL 24" X 24" CATCH BASIN PER DEAIL 16 SHEET C7.01
32	SUPPLY AND INSTALL STORM DRAIN CLEANOUT PER DETAIL 18 SHEET C7.01.
33	CONNECT TO EXISTING STORM DRAIN. CONTRACTOR TO VERIFY ELEVATION OF EXISTING PIPE AND NOTIFY ENGINEER OF ANY DISCREPANCIES PRIOR TO CONSTRUCTION.
34	SUPPLY AND INSTALL MODULAR WETLANDS STRUCTURE PER DETAIL 01 SHEET C7.02.
35	SUPPLY AND INSTALL 4" TRENCH DRAIN. ACO DRAIN MODEL 4000-3 WITH PERFORATED HEEL PROOF GRATE. EMBED IN CONCRETE PER MANUFACTURE'S RECOMMENDATIONS. CONNECT TO ADJACENT STORM DRAIN PER PLAN. SEE DETAIL 02 SHEET C7.02.
36	SUPPLY AND INSTALL 36" X 36" CATCH BASIN PER DEAIL 16 SHEET C7.01
37	SUPPLY AND INSTALL 6" ROUND PLANTER DRAIN PER DETAIL 16 SHEET C7.01

FIRE WATER CONSTRUCTION NOTES:

60	CONNECT TO EXISTING 8" WATER LINE WITH FLANGED COUPLING ADAPTER USING STAINLESS STEEL NUTS, BOLTS, AND WASHERS. CONTRACTOR TO VERIFY SIZE AND LOCATION OF EXISTING WATER LINE AND NOTIFY ENGINEER OF ANY DISCREPANCIES PRIOR TO CONSTRUCTION.
61	REINSTALL FIRE HYDRANT AND GATE VALVE PER DETAIL 07 SHEET C7.02.
62	SUPPLY AND INSTALL THRUST BLOCKING PER DETAIL 08 SHEET C7.02.
63	SUPPLY AND INSTALL PVC C900 DR-14 WITH 30" MIN COVER AND 36" MIN COVER WHERE SURFACE LOADS ARE EXPECTED.

CONSTRUCTION NOTES:

1. UTILITIES TO CROSS OVER OR UNDER OTHER UTILITIES TO MAINTAIN 12" MINIMUM CLEARANCE AT UTILITY CROSSINGS, UNLESS NOTED OTHERWISE.
2. CONTRACTOR SHALL VERIFY SIZE AND LOCATION (HORIZONTAL AND VERTICAL) OF EXISTING CROSSING AND JOINING UTILITIES PRIOR TO CONSTRUCTION AND IMMEDIATELY NOTIFY THE ENGINEER OF ANY CONFLICT.
3. CONTRACTOR SHALL CONSTRUCT GRAVITY UTILITIES (SEWER AND STORM DRAIN) BEFORE OTHER UTILITIES. CONSTRUCTION OF THESE GRAVITY UTILITIES TO START FROM THE DOWNSTREAM ENDS.
4. EXISTING UTILITIES ARE COMPILED BASED ON PREVIOUS BASE FILES, FIELD SURVEY AND FIELD VERIFICATION. POTHOLING IS RECOMMENDED TO VERIFY ANY AND ALL UTILITIES KNOWN OR UNKNOWN WHICH MAY BE IN CONFLICT WITH PROPOSED CONSTRUCTION.
5. PRIOR TO THE REMOVAL OF ANY WET OR DRY UTILITY LINES, THE CONTRACTOR SHALL CONFIRM WITH OWNER REPRESENTATIVE WHETHER THESE UTILITY LINES ARE STILL ACTIVE OR NOT. IMMEDIATELY NOTIFY THE ENGINEER OF ANY CONFLICT.
6. CONTRACTOR TO ADJUST TO FINISHED GRADE ALL EXISTING UTILITY BOXES, STORM DRAIN CLEANOUT COVERS, PULL BOXES AND VALVE COVERS NOT SPECIFICALLY SHOWN WITHIN THE LIMITS OF WORK.
7. SEE DETAIL 12 SHEET C7.01 FOR STORM DRAIN UTILITY TRENCHING AND BACKFILL.
8. SAWCUT, REMOVE AND REPLACE EXISTING CURB AS REQUIRED FOR TRENCHING. MATCH EXISTING CURB.
9. ALL PRECAST DRAIN INLETS TO HAVE AN APPROVED "NO DUMPING DRAINS TO THE OCEAN 3" X $5\frac{1}{2}$" ROUNDED CORNERED RECTANGLES STYLE #NDO OR 4" DIAMETER ROUND STYLE #SDO ABRASION AND UV RESISTANT DURACAST STYLE MARKER BY DAS MANUFACTURING OR EQUIVALENT APPLIED TO THE CONCRETE COLLAR AROUND DRAIN INLET USING RAPID SET URETHANE ADHESIVE OR QUICKSTIK EPOXY PUTTY ADHESIVE PER MANUFACTURER'S RECOMMENDATIONS AND SPECIFICATIONS.
http://www.dasmanufacturing.com/product_guide.html

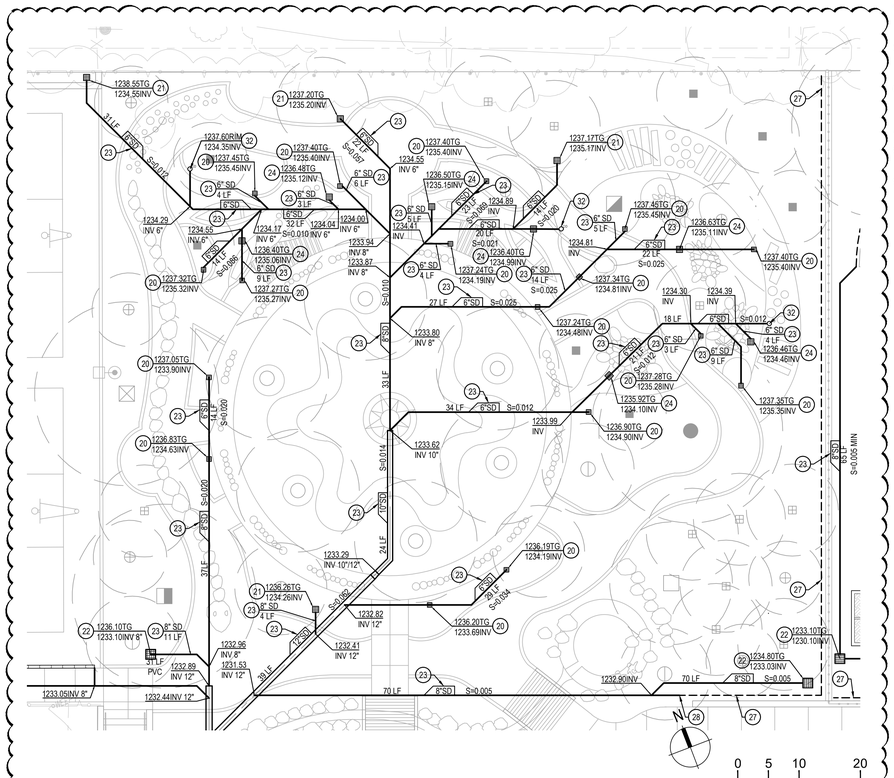

STORM DRAIN & UTILITY ENLARGEMENTS | 1" = 10' | 01

LPA
ARCHITECTURE ENGINEERING INTERIOR DESIGN
LANDSCAPE ARCHITECTURE PLANNING
949-261-1001 Office
LPADesignStudios.com
5301 California Avenue, Suite 100
Irvine, California 92617

REGISTERED PROFESSIONAL ENGINEER
KATHLEEN M. SPANGLER
R.C.E. 68369
EXP. 9-30-27
CIVIL
STATE OF CALIFORNIA

THE JOBSON FAMILY FOUNDATION

CONCEPT DESIGN:
Landscape Architect
Helle Nebelong
Denmark
hellenebelong.com

This document and all other project documents, ideas, aesthetics and designs incorporated therein are instruments of service. All project documents are copyright protected, are the property of LPA, Inc. (LPA) and cannot be lawfully used in whole or in part for any project or purpose except as set forth in the contractual agreement between LPA and its Client. The unauthorized disclosure and/or use of the project documents (including the creation of derivative works), may give rise to liability for copyright infringement, unlawful disclosure, use or misappropriation of property rights held by LPA. The unauthorized use of the project documents will give rise to the recovery of monetary losses and damages including attorney fees and costs for which the unauthorized user will be held liable.
Project documents describe the design intent of the work and are not a representation of as-built or existing conditions. LPA is not responsible for any discrepancies between the project documents and the existing conditions.

© LPA, Inc.

ALTADENA ARTS MAGNET SCHOOL

743 E Calaveras ST.
Altadena, CA 91001

Developed for
PUSD

Revision	Date
ADDENDUM 1	04/28/2026

Submittal	Date
100% SCHEMATIC DESIGN	12/08/2025
DSA SUBMITTAL	02/02/2026
DSA SUBMITTAL V2	03/13/2026

Job Number	33366
Checked By	KS
Scale	1" = 20'

STORM DRAIN & UTILITY ENLARGEMENTS

C3.02

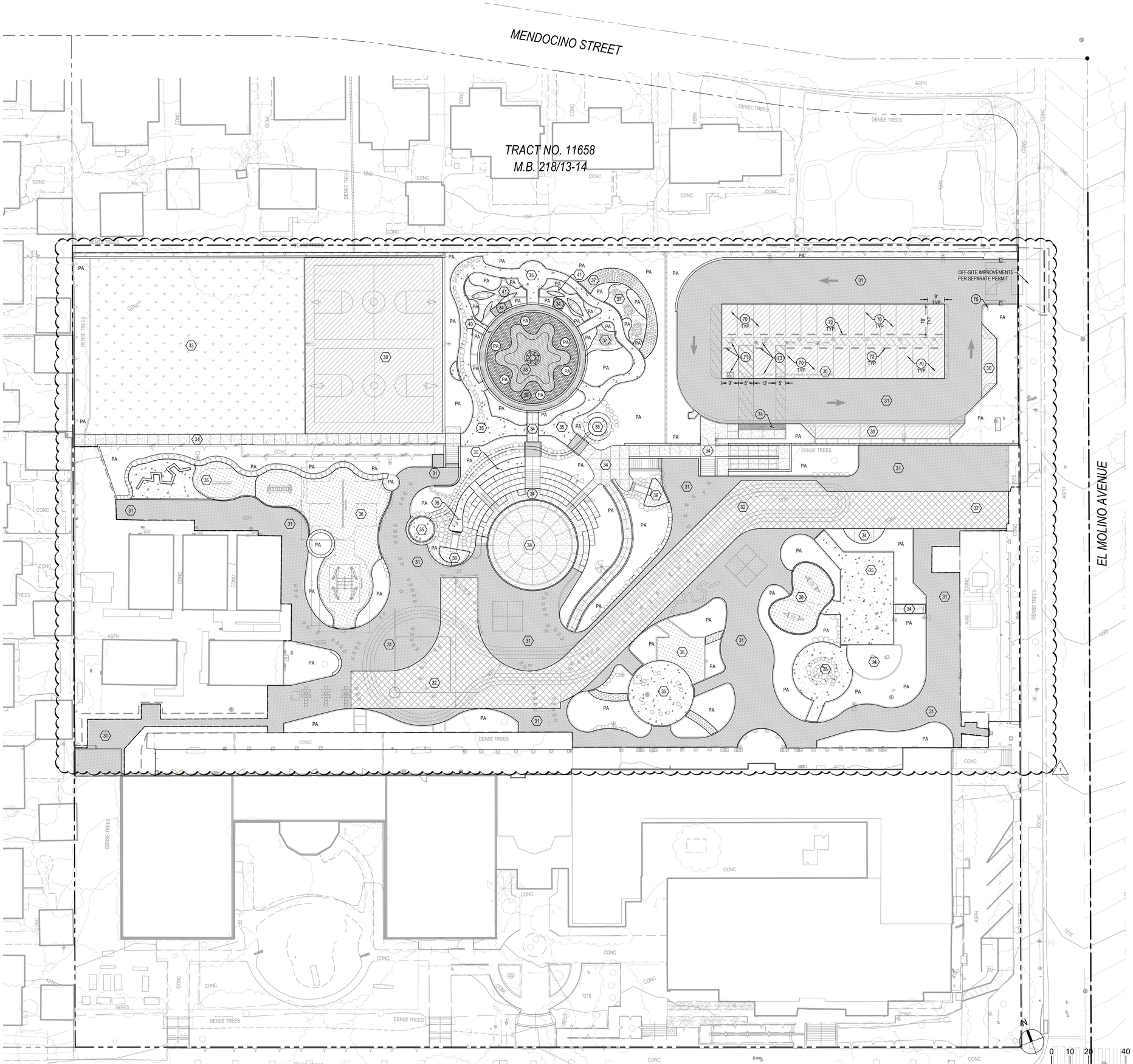

HORIZONTAL CONTROL, PAVING, STRPING, AND SIGNAGE PLAN 1" = 20' 01

PAVING NOTES:

1. SEE LANDSCAPE PLANS FOR PAVERS, LOCATION AND TYPE OF CONCRETE WALKS AND HARDSCAPE INCLUDING DETAILS FOR CONCRETE FINISHES, CONTROL JOINTS AND EXPANSION JOINTS.
2. VERIFY ALL VEHICULAR AND NON-VEHICULAR LIMITS WITH LANDSCAPE PLANS.

PAVING LEGEND

SYMBOL	DESCRIPTION
30	PARKING STALL AC PAVEMENT 4" AC OVER 5" CAB PER GEOTECHNICAL ENGINEER'S RECOMMENDATION. SEE DETAIL 05 SHEET C7.02.
31	DRIVE AISLE AC PAVEMENT 4" AC OVER 8.5" CAB PER GEOTECHNICAL ENGINEER'S RECOMMENDATION. SEE DETAIL 05 SHEET C7.02.
32	HEAVY DUTY AC PAVEMENT 4" AC OVER 12" CAB PER GEOTECHNICAL ENGINEER'S RECOMMENDATION. SEE DETAIL 05 SHEET C7.02.
33	NATURAL TURF SYSTEM SEE LANDSCAPE PLANS
34	PEDESTRIAN CONCRETE PAVEMENT 6" PCC OVER 6" CAB PER GEOTECHNICAL ENGINEER'S RECOMMENDATION. SEE DETAIL 01 SHEET C7.01.
35	DECOMPOSED GRANITE SEE LANDSCAPE PLANS.
36	ENGINEERED WOOD FIBER SEE LANDSCAPE PLANS.
37	MULCH SEE LANDSCAPE PLANS.
38	TILE PAVING - TYPE 1 SEE LANDSCAPE PLANS.
39	TILE PAVING - TYPE 2 SEE LANDSCAPE PLANS.
40	TILE PAVING - TYPE 3 SEE LANDSCAPE PLANS.
41	SAND SEE LANDSCAPE PLANS.
PA	PLANTING AREA SEE LANDSCAPE PLANS.

CONSTRUCTION NOTES:

KEY NOTE	DESCRIPTION
70	PAINT PARKING STALL STRIPING 4" WIDE WHITE PAINT PER SPECIFICATIONS.
71	FURNISH SIGN AND WHEELSTOP AND PAINT ACCESSIBLE PARKING STALL AND ACCESS AISLE PER DETAILS 05, 06 AND 07 SHEET C7.01.
72	FURNISH WHEELSTOP PER DETAIL 09 SHEET C7.01.
73	FURNISH SIGNS AND WHEELSTOP AND PAINT VAN ACCESSIBLE EVCS PARKING STALL AND ACCESS AISLE PER DETAILS 03 AND 04 SHEET C7.02.
74	TRUNCATED DOME PAVER PER DETAIL 10 SHEET C7.01.
75	UNAUTHORIZED VEHICLE SIGN PER DETAIL 11 SHEET C7.01.

STRIPING NOTES

1. ALL EXISTING STRIPING AND MARKINGS TO REMAIN UNLESS OTHERWISE NOTED. CONFLICTS BETWEEN EXISTING AND PROPOSED SHALL BE RESOLVED BY THE ENGINEER.
2. REMOVAL OF EXISTING STRIPING AND PAVEMENT MARKINGS SHALL BE ACCOMPLISHED BY WET SANDBLASTING OR OTHER APPROVED GRINDING METHOD PRIOR TO INSTALLATION OF NEW STRIPING. ALL CONFLICTING STRIPING, PAVEMENT MARKINGS, AND RAISED PAVEMENT MARKERS SHALL BE REMOVED.
3. PAVEMENT THAT IS DAMAGED DUE TO THE REMOVAL OF MARKERS OR STRIPING SHALL BE REPAIRED TO THE SATISFACTION OF THE OWNER.

HORIZONTAL CONTROL NOTES:

THIS HORIZONTAL CONTROL PLAN ESTABLISHES THE FOLLOWING TO BE USED AS BASE CONTROL FOR CONSTRUCTION STAKING.

1. PRIOR TO STAKING ANY BUILDING STRUCTURE, SURVEYOR SHALL VERIFY THAT THE GRIDS SHOWN ON THIS PLAN MATCHES THE ARCHITECTURAL & STRUCTURAL PLANS.
2. TWO COORDINATES ARE PROVIDED TO ESTABLISH THE BUILDING GRID. SEE ARCHITECTURAL AND STRUCTURAL PLANS FOR FINAL BUILDING DIMENSIONS.
3. IF ANY DISCREPANCIES ARE FOUND DURING CONSTRUCTION STAKING NOTIFY CIVIL ENGINEER IMMEDIATELY.
4. SEE LANDSCAPE PLANS FOR DETAILED HARDSCAPE DIMENSIONS.
5. SEE LANDSCAPE PLANS FOR LOCATION AND TYPE OF CONCRETE WALKS AND HARDSCAPE INCLUDING DETAILS FOR CONCRETE FINISHES, CONTROL JOINTS AND EXPANSION JOINTS.
6. SEE PAVING AND STRIPING PLANS FOR LOCATION AND TYPE OF PAVING AND STRIPING.

BENCHMARK

-SEE SHEET C0.01 FOR BENCHMARK.

BASIS OF BEARINGS

-SEE SHEET C0.01 FOR BASIS OF BEARINGS.

LPA
ARCHITECTURE ENGINEERING INTERIOR DESIGN
LANDSCAPE ARCHITECTURE PLANNING
949-261-1001 Office
LPADesignStudios.com
5301 California Avenue, Suite 100
Irvine, California 92617

REGISTERED PROFESSIONAL ENGINEER
KATHLEEN M. SPANGLER
R.C.E. 68369
EXP. 9-30-27
CIVIL
STATE OF CALIFORNIA

THE JOBSON FAMILY FOUNDATION

CONCEPT DESIGN:
Landscape Architect
Helle Nebelong
Denmark
hellenebelong.com

This document and all other project documents, ideas, aesthetics and designs incorporated therein are instruments of service. All project documents are copyright protected, are the property of LPA, Inc. (LPA) and cannot be lawfully used in whole or in part for any project or purpose except as set forth in the contractual agreement between LPA and its Client. The unauthorized disclosure and/or use of the project documents (including the creation of derivative works), may give rise to liability for copyright infringement, unlawful disclosure, use or misappropriation of property rights held by LPA. The unauthorized use of the project documents will give rise to the recovery of monetary losses and damages including attorney fees and costs for which the unauthorized user will be held liable.
Project documents describe the design intent of the work and are not a representation of as-built or existing conditions. LPA is not responsible for any discrepancies between the project documents and the existing conditions.

© LPA, Inc.

ALTADENA ARTS MAGNET SCHOOL

743 E Calaveras ST.
Altadena, CA 91001

Developed for
PUSD

Revision	Date
ADDENDUM 1	04/28/2026

Submittal	Date
100% SCHEMATIC DESIGN	12/08/2025
DSA SUBMITTAL	02/02/2026
DSA SUBMITTAL V2	03/13/2026

Job Number	33366
Checked By	KS
Scale	1" = 20'

HORIZONTAL CONTROL, PAVING, STRPING, AND SIGNAGE PLAN

C5.01

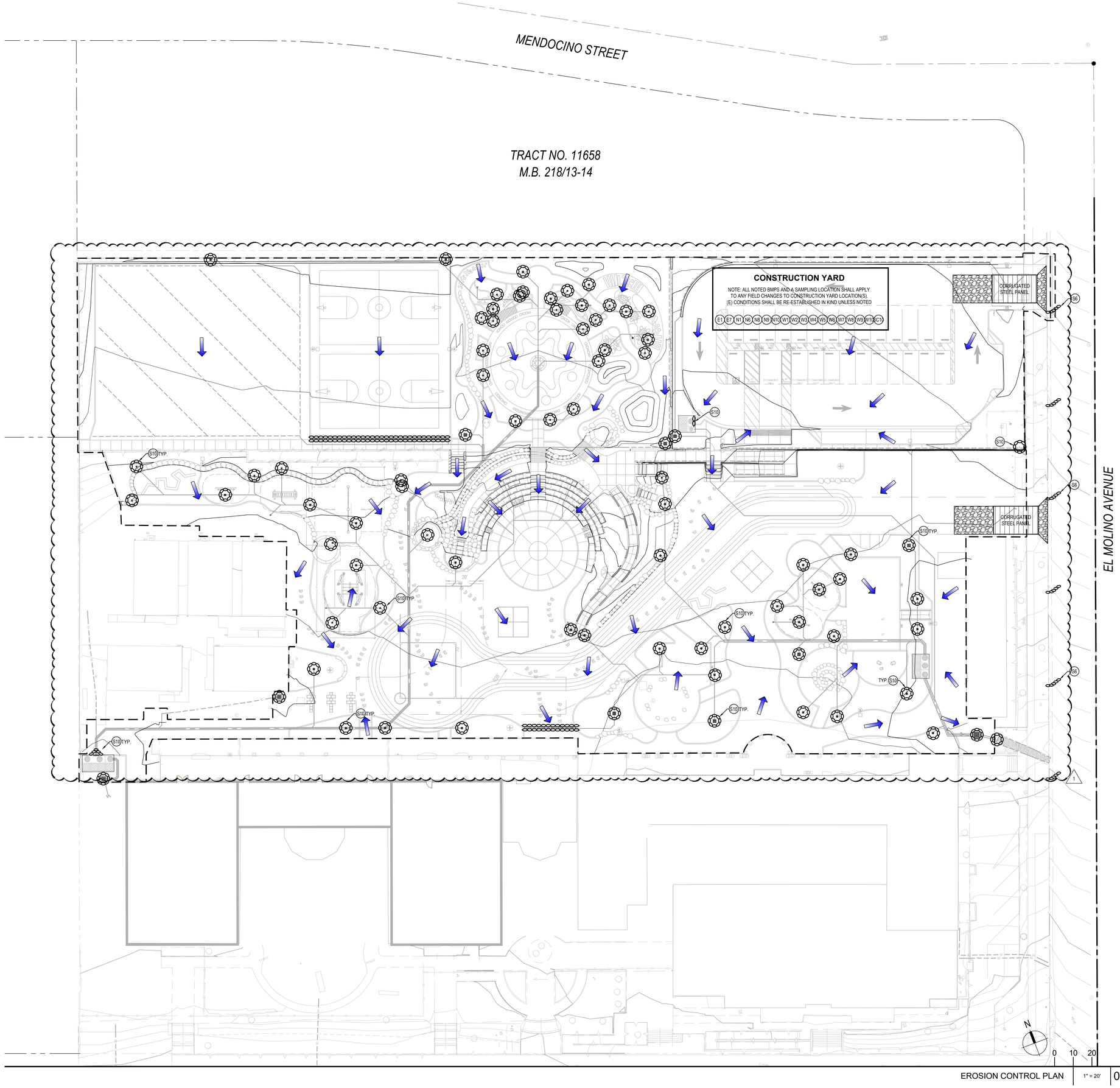

EROSION CONTROL PLAN 01

EROSION CONTROL NOTES

-SEE SHEET C0.01 FOR EROSION AND SEDIMENT CONTROL NOTES.

-SEE SHEET C0.01 FOR BMP MAINTENANCE NOTES.

-ALL BMPS PER CALIFORNIA STORMWATER QUALITY ASSOCIATION (CASQA)(UNLESS NOTED OTHERWISE) AND ARE AVAILABLE AT www.casqa.org.

-BMPS "NOT" CALLED OUT PER PLAN, ARE SHOWN FOR REFERENCE AS BMP OPTIONS PER QSP (QUALIFIED SWPPP PRACTITIONER) FIELD RECOMMENDATIONS.

-AT THE COMPLETION OF PROJECT, CONTRACTOR SHALL REMOVE ALL CONSTRUCTION BMPS FROM SITE AND DISPOSE IN A LEGAL MANNER.

LEGEND

SYMBOL	DESCRIPTION
	GRAVEL BAGS AND/OR SANDBAGS PER BMP KEYNOTES
	FIBER ROLL
	SILT FENCE
	APPROXIMATE LIMIT OF GRADING
	FLOW DIRECTION

EROSION CONTROL BMPs:

KEY NOTE	DESCRIPTION
E1	EC-1, SCHEDULING
E2	EC-2, PRESERVATION OF EXISTING VEGETATION
E3	EC-3, HYDRAULIC MULCH
E4	EC-4, HYDROSEEDING
E5	EC-5, SOIL BINDERS
E6	EC-6, STRAW MULCH
E7	EC-7, GEOTEXTILES AND MATS
E8	EC-8, WOOD MULCHING
E9	EC-9, EARTH DIKES AND DRAINAGE SWALES
E10	EC-10, VELOCITY DISSIPATION DEVICES
E11	EC-11, SLOPE DRAINS
E12	EC-12, STREAMBANK STABILIZATION
E14	EC-14, COMPOST BLANKET
E15	EC-15, SOIL PREPARATION/ROUGHENING
E16	EC-16, NON-VEGETATIVE STABILIZATION

SEDIMENT CONTROL BMPs:

S1	SE-1, SILT FENCE
S2	SE-2, SEDIMENT BASIN
S3	SE-3, SEDIMENT TRAP
S4	SE-4, CHECK DAMS
S5	SE-5, FIBER ROLLS
S6	SE-6, GRAVEL BAG BERM
S7	SE-7, STREET SWEEPING AND VACUUMING
S8	SE-8, SANDBAG BARRIER
S9	SE-9, STRAW BALE BARRIER
S10	SE-10, STORM DRAIN INLET PROTECTION
S11	SE-11, ACTIVE TREATMENT SYSTEMS
S12	SE-12, TEMPORARY SILT DIKE
S13	SE-13, COMPOST SOCKS AND BERMS
S14	SE-14, BIOFILTER BAGS

TRACKING CONTROL BMPs:

T1	TC-1, STABILIZED CONSTRUCTION ENTRANCE/EXIT
T2	TC-2, STABILIZED CONSTRUCTION ROADWAY
T3	TC-3, ENTRANCE/OUTLET TIRE WASH

NON-STORMWATER MANAGEMENT CONTROL BMPs:

N1	NS-1, WATER CONSERVATION PRACTICES
N2	NS-2, DEWATERING OPERATIONS
N3	NS-3, PAVING AND GRINDING OPERATIONS
N4	NS-4, TEMPORARY STREAM CROSSING
N5	NS-5, CLEAN WATER DIVERSION
N6	NS-6, ILLICIT CONNECTION/DISCHARGE
N7	NS-7, POTABLE WATER/IRRIGATION
N8	NS-8, VEHICLE AND EQUIPMENT CLEANING
N9	NS-9, VEHICLE AND EQUIPMENT FUELING
N10	NS-10, VEHICLE AND EQUIPMENT MAINTENANCE
N11	NS-11, PILE DRIVING OPERATIONS
N12	NS-12, CONCRETE CURING
N13	NS-13, CONCRETE FINISHING
N14	NS-14, MATERIAL OVER WATER
N15	NS-15, DEMOLITION ADJACENT TO WATER
N16	NS-16, TEMPORARY BATCH PLANTS
SC11	SC-10, NON-STORMWATER DISCHARGES

WIND EROSION CONTROL BMPs:

WE	WE-1, WIND EROSION CONTROL

WASTE MANAGEMENT AND MATERIALS POLLUTION CONTROL BMPs:

W1	WM-1, MATERIAL DELIVERY AND STORAGE
W2	WM-2, MATERIAL USE
W3	WM-3, STOCKPILE MANAGEMENT
W4	WM-4, SPILL PREVENTION AND CONTROL
W5	WM-5, SOLID WASTE MANAGEMENT
W6	WM-6, HAZARDOUS WASTE MANAGEMENT
W7	WM-7, CONTAMINATED SOIL MANAGEMENT
W8	WM-8, CONCRETE WASTE MANAGEMENT
W9	WM-9, SANITARY/SEPTIC WASTE MANAGEMENT
W10	WM-10, LIQUID WASTE MANAGEMENT

STORM WATER STORAGE OR CONTAINMENT

W#	STORMWATER STORAGE (E.G. BIORETENTION) OR CONTAINMENT (E.G. CISTERN)

DISCHARGE LOCATIONS

D#	DISCHARGE LOCATION

SAMPLING LOCATIONS

B#	POLLUTANT SAMPLE LOCATION - BACKGROUND SAMPLE
C#	POLLUTANT SAMPLE LOCATION - CONTRACTORS YARD
S#	POLLUTANT SAMPLE LOCATION - SITE
R#	POLLUTANT SAMPLE LOCATION - RUN-ON

NOTE:
THE SAMPLE LOCATIONS SHOWN ARE THE MINIMUM REQUIREMENT FOR THE PROJECT SITE AND RISK LEVEL X. SAMPLE LOCATIONS MAY BE RELOCATED IF FIELD CONDITIONS WILL NOT ALLOW FOR SATISFACTORY SAMPLING. ANY ADJUSTMENTS TO SAMPLING LOCATIONS MUST MEET THE INTENDED PURPOSE ORIGINALLY DESIGNATED FOR THAT LOCATION AND MUST BE DOCUMENTED WITH A SWPPP AMENDMENT FORM.

LPA
ARCHITECTURE ENGINEERING INTERIOR DESIGN
LANDSCAPE ARCHITECTURE PLANNING
949-261-1001 Office
LPADesignStudios.com
5301 California Avenue, Suite 100
Irvine, California 92617

REGISTERED PROFESSIONAL ENGINEER
KATHLEEN M. SPANGET
R.C.E. 68369
EXP. 9-30-27
CIVIL
STATE OF CALIFORNIA

THE JOBSON FAMILY FOUNDATION

CONCEPT DESIGN:
Landscape Architect
Helle Nebelong
Denmark
hellenebelong.com

This document and all other project documents, ideas, aesthetics and designs incorporated therein are instruments of service. All project documents are copyright protected, are the property of LPA, Inc. (LPA) and cannot be lawfully used in whole or in part for any project or purpose except as set forth in the contractual agreement between LPA and its Client. The unauthorized disclosure and/or use of the project documents (including the creation of derivative works), may give rise to liability for copyright infringement, unlawful disclosure, use or misappropriation of property rights held by LPA. The unauthorized use of the project documents will give rise to the recovery of monetary losses and damages including attorney fees and costs for which the unauthorized user will be held liable.
Project documents describe the design intent of the work and are not a representation of as-built or existing conditions. LPA is not responsible for any discrepancies between the project documents and the existing conditions.

© LPA, Inc.

ALTADENA ARTS MAGNET SCHOOL

743 E Calaveras ST.
Altadena, CA 91001

Developed for
PUSD

Revision	Date
ADDENDUM 1	04/28/2026

Submittal	Date
100% SCHEMATIC DESIGN	12/08/2025
DSA SUBMITTAL	02/02/2026
DSA SUBMITTAL V2	03/13/2026

Job Number	33366
Checked By	KS
Scale	1" = 20'

EROSION CONTROL PLAN

C6.01

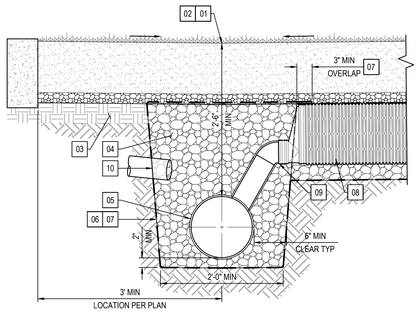

01 FINISH GRADE
02 NATURAL TURF AND SUBBASE PER LANDSCAPE PLANTING PLANS
03 SUBGRADE PREPERATION PER GEOTECHNICAL REPORT
04 3/8" WASHED DRAIN ROCK COMPACTED PER GEOTECHNICAL REPORT
05 ADS HDPE DRAIN PIPE WITH 3 ROWS OF 0.3"Ø HOLES, 12" OC LOCATED ON INNER CORRUGATIONS ONLY. TO ALIGN WITH THE BOTTOM OF THE TRENCH. SLOPPED PER PLAN (PERFORATIONS DOWN)
06 BATTER SIDES OF TRENCH 1:12
07 WRAP SUBDRAIN TRENCH DRAIN ROCK WITH MIRAFI 140N FILTER FABRIC WITHOUT WRINKLES OR DEFORMITIES
08 12" MULTI-FLOW FLAT DRAIN INSTALL VERTICALLY PER DETAIL 07 SHEET L5.05.
09 PROVIDE AND INSTALL END OUTLET WITHIN A FEW INCHES OF SUBDRAIN TRENCH. CONNECT TO PERIMETER SUBDRAIN WITH FLEXIBLE CONNECTION.
10 STUB DRAIN PIPE INTO TRENCH WHERE OCCURS PER PLAN. LEAVE END OPEN AND COVER WITH CLEAN DRAIN ROCK.

PERIMETER SUBDRAIN AT NATURAL TURF FIELD | NTS | 19

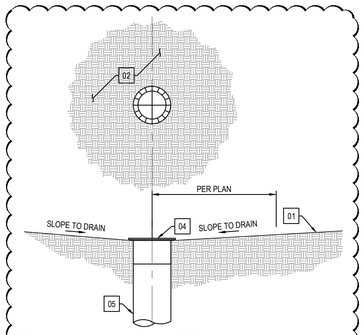

01 FINISHED GRADE
02 DRY CREEK BASIN PER LANDSCAPE DETAIL 17 SHEET L5.05
04 6" ROUND ATRIUM GRATE. NDS PART NO. D6 OR APPROVED EQUAL
05 6" PVC SDR 35 RISER

ATRIUM DRAIN @ DRY CREEK BASIN | NTS | 15

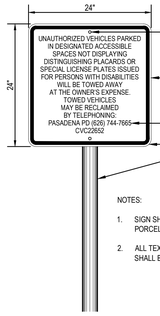

NOTES:
1. SIGN SHALL BE REFLECTORIZED. PROVIDE PORCELAIN ON STEEL.
2. ALL TEXT SHALL BE BLACK AND BACKGROUND SHALL BE WHITE.

UNAUTHORIZED VEHICLE SIGN | NTS | 11

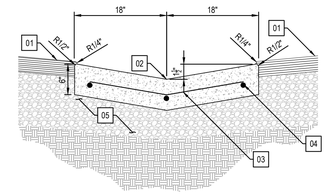

01 FINISHED SURFACE
02 FLOW LINE PER PLAN
03 #3 REBAR @ 18" OC
04 (3) #3 REBAR CONTINUOUS TYP
05 SUBGRADE PREPARATION PER GEOTECHNICAL ENGINEER RECOMMENDATIONS

VALLEY GUTTER | NTS | 04

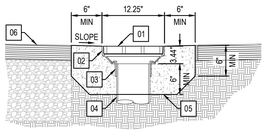

01 NDS CAST IRON GRATE INSTALL FLUSH 12" SQUARE PART NO. 1213
02 NDS LOW PROFILE ADAPTER 12" SQUARE PART NO. 1230
03 NDS UNIVERSAL ADAPTER PART NO. 1243 - 3" OR 4" OUTLET PART NO. 1245 - 3" OR 4" OFFSET OUTLET PART NO. 1266 - 6" OUTLET PART NO. 1888 - 8" OUTLET
04 OUTLET PIPE PER STORM DRAIN PLAN
05 CONCRETE COLLAR CLASS 'C' LOAD RATING/H20
06 SUBGRADE SURFACE PER LANDSCAPE DETAIL 19 SHEET L5.01

SUBGRADE NDS DRAIN INLET | NTS | 21

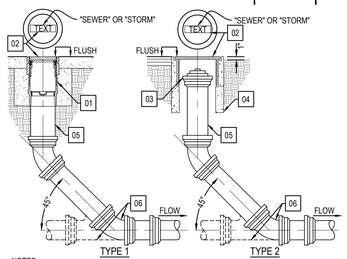

NOTES:
- CLEANOUT TYPE 1 TO BE INSTALLED IN ALL CONCRETE PAVEMENT AND PEDESTRIAN HARDSCAPE AREAS. LID SHALL BE INSTALLED FLUSH WITH FINISHED SURFACE. PROVIDE PCC COLLAR BELOW HARDSCAPE PER MANUFACTURES REQUIREMENTS.
- CLEANOUT TYPE 2 TO BE INSTALLED IN ASPHALT PAVEMENT AND PLANTED AREAS. CLEANOUT RIM TO BE INSTALLED FLUSH WITH FINISHED SURFACE OF AC PAVING OR 1" ABOVE FINISHED GRADE IN PLANTER AREAS AS APPLIES.

01 ZURN ZN-1400-HD-SM OR APPROVED EQUAL
02 CLEANOUT LID WITH "SEWER" OR "STORM"
03 SOLVENT WELD X F.I.P.T. COUPLING WITH M.I.P.T. PLUG WITH MALE SQUARE NUT.
04 BROOKS 1-RT CLEANOUT OR APPROVED EQUAL
05 PIPE SIZE PER PLAN. MATERIAL TO MATCH ADJACENT LINE
06 WYE FITTING AT LINE CLEANOUT, 45° ELBOW AT TERMINAL CLEANOUT

CLEANOUT | NTS | 18

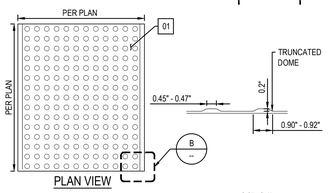

01 PRECAST WAUSAU TILE, MODEL ADA-2 DETECTABLE WARNING DOME PAVER, OR APPROVED EQUAL

NOTE:
- THE DETECTABLE WARNING SHALL EXTEND THE FULL WIDTH OF THE CURB RAMP.
- DETECTABLE WARNING SURFACES SHALL BE YELLOW AND APPROXIMATE 33538 OF SAE AMS-STD-595A.
- INSTALLATION PER MANUFACTURER INSTRUCTIONS

DETECTABLE WARNING | NTS | 10

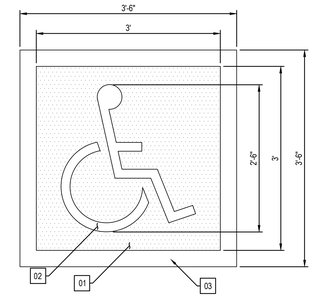

01 BLUE BACKGROUND CONFORMING TO FEDERAL STANDARD 595C COLOR FS 15090
02 2" WIDE WHITE REFLECTORIZED PAINT STRIPING. PER CBC FIGURE 11B-703.7.2.1
03 WHITE REFLECTORIZED PAINT STRIPING

NOTES:
A. STENCIL ONE SYMBOL ONTO PARKING SURFACE IN EACH ACCESSIBLE STALL.
B. LOCATE PER ACCESSIBLE PARKING STALL DETAIL.
C. ALL LINES WHITE ON BLUE BACKGROUND.

INTERNATIONAL SYMBOL OF ACCESSIBILITY | NTS | 07

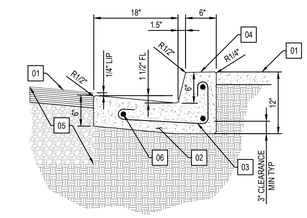

NOTES:
- EXPANSION JOINTS AND CONTROL JOINTS PER SSPWC SECTION 303-5 SHALL BE PLACED IN CURB AND GUTTER ALIGNED WITH HARDSCAPE JOINTING PER LANDSCAPE DRAWINGS (EXCEPTION: CONTROL JOINTS SHALL BE MAXIMUM 10.0' INTERVALS).

01 FINISHED SURFACE
02 CONCRETE CURB AND GUTTER
03 #3 REBAR @ 36" OC
04 SLOPE 1/4" PER FOOT
05 PAVEMENT SECTION PER PLAN
06 (3) #4 REBAR CONTINUOUS TYP

CURB AND GUTTER - 18 INCH | NTS | 03

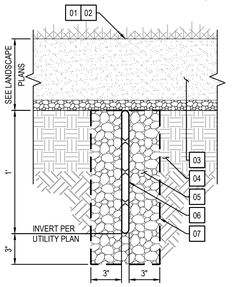

01 FINISH GRADE
02 NATURAL TURF PER LANDSCAPE PLANTING PLANS
03 SUBBASE GROWING MEDIUM PER LANDSCAPE PLANTING PLANS
04 SUBGRADE PREPERATION PER GEOTECHNICAL REPORT
05 3/8" WASHED DRAIN ROCK COMPACTED PER GEOTECHNICAL REPORT
06 12" MULTI-FLOW FLAT DRAIN WITH SLEEVE SPACED AT 15" ON CENTER EXTEND INTO PERIMETER SUBDRAIN TRENCH PER DETAIL XX THIS SHEET.
07 SOIL ISOLATION FILTER FABRIC (MIRAFI 140N)

NATURAL TURF FIELD SUBDRAIN | NTS | 20

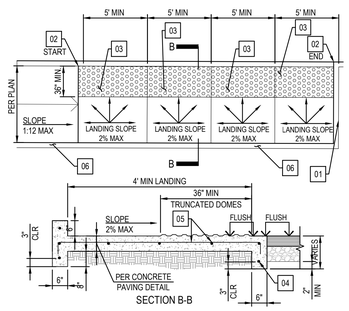

01 6" VERTICAL CURB
02 FLUSH CURB
03 SEE DETECTABLE WARNING DETAIL
04 #3 REBAR CONTINUOUS (TYP)
05 REINFORCEMENT PER PAVING DETAIL CENTERED IN CONCRETE SECTION
06 CONCRETE CURB. TOP OF CURB TO MATCH RAMP SLOPE

ACCESSIBLE CURB RAMP - DOUBLE | NTS | 17

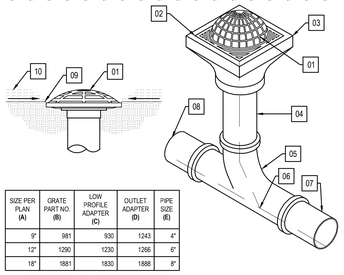

SIZE PER PLAN (A)	GRATE PART NO. (B)	LOW PROFILE ADAPTER (C)	OUTLET ADAPTER (D)	PIPE SIZE (E)
9"	981	930	1243	4"
12"	1290	1230	1266	6"
18"	1881	1830	1888	8"

01 (A)" SQUARE BLACK ATRIUM GRATE. NDS PART NO. (B) OR APPROVED EQUAL
02 TG ELEVATION PER PLAN
03 (A)" NDS PART NO. (C) AND (D) OR APPROVED EQUAL
04 (E)" PVC SDR 35 RISER
05 WYE FITTING
06 INVERT ELEVATION PER PLAN
07 STORM DRAIN PER PLAN
08 PLUG IF AT END OF RUN
09 GRATE RIM FLUSH WITH FINISHED GRADE UNLESS NOTED OTHERWISE
10 MATERIAL PER LANDSCAPE PLANS

SQUARE ATRIUM PLANTER DRAIN | NTS | 13

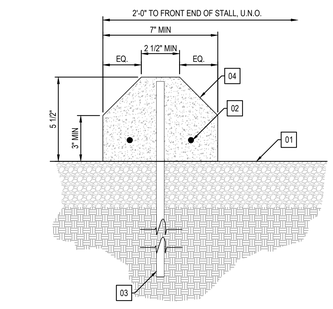

01 FINISHED SURFACE
02 (2) #3 REBAR CONTINUOUS TYP
03 #4 x 18" REBAR AT EACH END
04 PRE-CAST CONC. WHEEL STOP 4'-0" LONG AT SINGLE STALL, 6'-0" LONG AT STALLS SHARED

PRE-CAST CONCRETE WHEEL STOP | NTS | 09

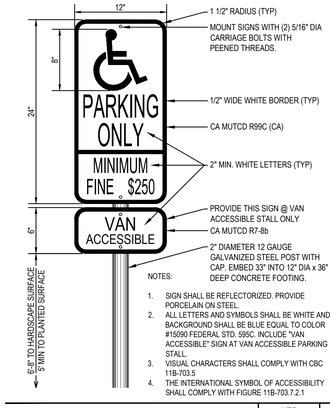

NOTES:
1. SIGN SHALL BE REFLECTORIZED. PROVIDE PORCELAIN ON STEEL.
2. ALL LETTERS AND SYMBOLS SHALL BE WHITE AND BACKGROUND SHALL BE BLUE EQUAL TO COLOR #15090 FEDERAL STD. 595C. INCLUDE "VAN ACCESSIBLE" SIGN AT VAN ACCESSIBLE PARKING STALL.
3. VISUAL CHARACTERS SHALL COMPLY WITH CBC 11B-703.5
4. THE INTERNATIONAL SYMBOL OF ACCESSIBILITY SHALL COMPLY WITH FIGURE 11B-703.7.2.1

ACCESSIBLE PARKING SIGN | NTS | 06

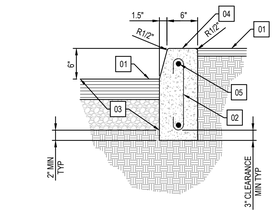

NOTES:
- EXPANSION JOINTS AND CONTROL JOINTS PER SSPWC SECTION 303-5 SHALL BE PLACED IN CURB ALIGNED WITH HARDSCAPE JOINTING PER LANDSCAPE DRAWINGS (EXCEPTION: CONTROL JOINTS SHALL BE MAXIMUM 10.0' INTERVALS).

01 FINISHED SURFACE / FINISHED GRADE
02 #3 REBAR @ 36" OC
03 PAVEMENT SECTION PER PLAN
04 SLOPE 1/4" PER FOOT
05 (2) #4 REBAR CONTINUOUS TYP

VERTICAL CURB | NTS | 02

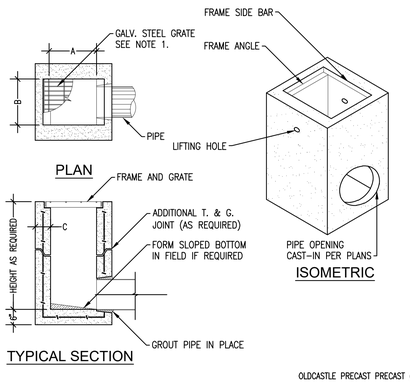

OLDCASTLE PRECAST GROUP OR EQUIVALENT DROP INLET TABLE

MODEL No.	CPC MODEL REF.	A		B		C	
		IN	MM	IN	MM	IN	MM
CB1212TE	EK	12	300	12	300	4	100
CB1818TE	CK	18	450	18	450	5	125
CB1824TE	1K*	18	450	24	600	5	125
CB2424TE	2K	24	600	24	600	5	125
CB2430TE	3K	24	600	30	750	5	125
CB3030TE	5K	30	750	30	750	6	150
CB2436TE	1L	24	600	36	900	6	150
CB3636TE	1M	36	900	36	900	6	150
CB2448TE	3L	24	600	48	1200	6	150
CB3648TE	3M	36	900	48	1200	6	150
CB4848TE	1R	48	1200	48	1200	6	150

NOTES :
1. FRAMES AND GRATES MAY BE SPECIFIED FOR PEDESTRIAN OR H20 TRAFFIC LOADING. ALL GRATES ARE BICYCLE PROOF.
2. ¾" MAX. GRATE OPENINGS IN PATH-OF-TRAVEL IN ALL DIRECTIONS WHERE PATH-OF-TRAVEL IS MULTI-DIRECTIONAL.

OLDCASTLE PRECAST PRECAST (www.oldcastleprecast.com) DRAIN INLET W-IN-12 OR EQUIVALENT

DRAIN INLET | NTS | 16

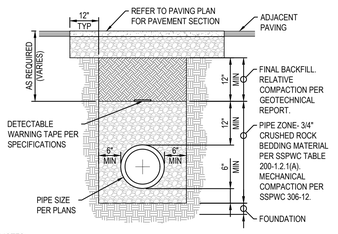

NOTES:
1. ALL PIPE SYSTEMS SHALL BE INSTALLED IN ACCORDANCE WITH ASTM D2321, "STANDARD PRACTICE FOR UNDERGROUND INSTALLATION OF THERMOPLASTIC PIPE FOR SEWERS AND OTHER GRAVITY FLOW APPLICATIONS", LATEST EDITION.
2. IF UNSTABLE FOUNDATION SOIL IS ENCOUNTERED, THE GEOTECHNICAL FIELD INSPECTOR SHALL DETERMINE OVEREXCAVATION DEPTH AND FOUNDATION RE-FILL MATERIAL.
3. CONTRACTOR SHALL PROVIDE HAND EXCAVATED "BELL HOLE" FOR EACH PIPE JOINT SO THAT THE WEIGHT OF PIPE DOES NOT BEAR ON THE BELL. CONTRACTOR SHALL RE-FILL AND HAND-TAMP EACH "BELL HOLE" PRIOR TO COMPLETING THE PLACEMENT OF PIPE BEDDING.
4. MEASURES SHOULD BE TAKEN TO PREVENT MIGRATION OF NATIVE FINES INTO BACKFILL MATERIAL WHEN REQUIRED BY GEOTECHNICAL REPORT. FILTER FABRIC IF USED SHALL SATISFY THE REQUIREMENTS FOR A TYPE 180N, NONWOVEN GEOTEXTILE PER SSPWC 213-2 (LATEST EDITION).

PIPE TRENCH - STORM DRAIN | NTS | 12

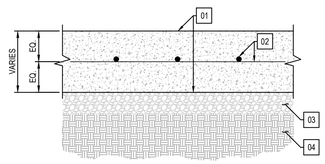

NOTES:
- REFER TO LANDSCAPE DRAWINGS FOR COLOR, FINISH, PATTERN, TEXTURE, CONTROL JOINTS, EXPANSION JOINTS, AND THICKENED EDGE. FOR MOISTURE-SENSITIVE FINISHES, REFER TO GEOTECHNICAL REPORT FOR VAPOR RETARDER.
- CONCRETE DOWELING PER LANDSCAPE DRAWINGS AND PROJECT GEOTECHNICAL REPORT RECOMMENDATIONS.
- DO NOT ALLOW CONCRETE OVER-POUR INTO ADJACENT PLANTERS.
- MINIMUM CONCRETE STRENGTH PER SPECIFICATIONS

01 CONCRETE PAVING PEDESTRIAN: 4" THICK VEHICULAR: 6.5" THICK
02 PEDESTRIAN: #4 @ 16" OC EACH WAY VEHICULAR: #3 @ 18" OC EACH WAY
03 COMPACTED BASE COURSE PER GEOTECHNICAL REPORT (WHERE OCCURS).
04 SUBGRADE COMPACTED PER PROJECT GEOTECHNICAL REPORT

CONCRETE PAVEMENT | NTS | 01

LPA
ARCHITECTURE ENGINEERING INTERIOR DESIGN
LANDSCAPE ARCHITECTURE PLANNING
949-261-1001 Office
LPADesignStudios.com
5301 California Avenue, Suite 100
Irvine, California 92617

REGISTERED PROFESSIONAL ENGINEER KATHLEEN M. SPANGLER R.C.E. 68369 EXP. 9-30-27 CIVIL STATE OF CALIFORNIA

THE JOBSON FAMILY FOUNDATION

CONCEPT DESIGN:
Landscape Architect
Helle Nebelong
Denmark
hellenebelong.com

This document and all other project documents, ideas, aesthetics and designs incorporated therein are instruments of service. All project documents are copyright protected, are the property of LPA, Inc. (LPA) and cannot be lawfully used in whole or in part for any project or purpose except as set forth in the contractual agreement between LPA and its Client. The unauthorized disclosure and/or use of the project documents (including the creation of derivative works), may give rise to the recovery of monetary losses and damages including attorney fees and costs for which the unauthorized user will be held liable.
Project documents describe the design intent of the work and are not a representation of as-built or existing conditions. LPA is not responsible for any discrepancies between the project documents and the existing conditions.
© LPA, Inc.

ALTADENA ARTS MAGNET SCHOOL

743 E Calaveras ST.
Altadena, CA 91001

Developed for PUSD

Revision	Date
ADDENDUM 1	04/28/2026

Submittal	Date
100% SCHEMATIC DESIGN	12/08/2025
DSA SUBMITTAL	02/02/2026
DSA SUBMITTAL V2	03/13/2026

Job Number	33366
Checked By	KS
Scale	NTS

DETAILS

C7.01

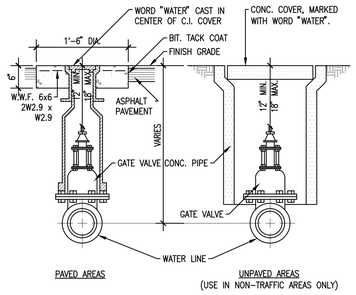

VALVE BOX | NTS | 09

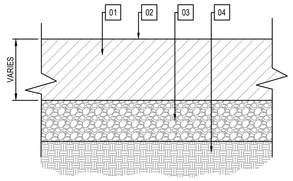

01 AC PAVING, SEE SCHEDULE BELOW

02 2 COATS OF SURFACE SEAL

03 BASE COURSE, SEE SCHEDULE BELOW

04 COMPACTED SUBGRADE PER GEOTECHNICAL REPORT RECOMMENDATIONS

ASPHALT CONCRETE		BASE COURSE	
LOCATION	THICKNESS	THICKNESS	TYPE
TI 4	3"	5"	CAB
TI 6	4"	8.5"	CAB
TI 7	4"	12"	CAB

AC PAVING | NTS | 05

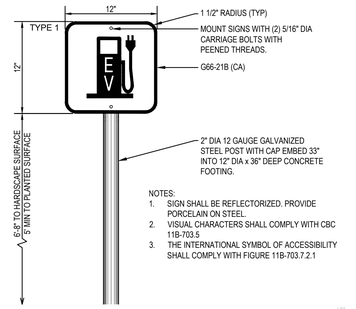

NOTES:
1. SIGN SHALL BE REFLECTORIZED. PROVIDE PORCELAIN ON STEEL.
2. VISUAL CHARACTERS SHALL COMPLY WITH CBC 11B-703.5
3. THE INTERNATIONAL SYMBOL OF ACCESSIBILITY SHALL COMPLY WITH FIGURE 11B-703.7.2.1

EV PARKING SIGNS | NTS | 04

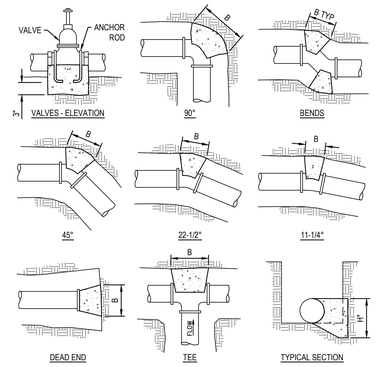

NOTES:
1. THRUST BLOCKS SHALL BE USED FOR PLASTIC PIPE 4" DIAMETER OR LARGER.
2. THRUST BLOCK INSTALLATION PER SSPWC SECTION 306 (LATEST EDITION).
3. THRUST BLOCKS SHALL BE PCC, 450-C-2000 PER SSPWC SECTION 201 (LATEST EDITION).
4. ANCHOR RODS SHALL BE GALVANIZED STEEL, 1/2" DIAMETER, WRAPPED AROUND PIPE.
5. ALL VIEWS ARE PLAN VIEWS UNLESS OTHERWISE NOTED.
6. THRUST BLOCK AREAS ARE BASED ON 200 PSI PRESSURE AND 3,000 PSF ALLOWABLE SOIL BEARING PRESSURE. THRUST BLOCK SIZING PER 2022 NFPA 24, ANNEX A, SECTION A.10.6.1.
7. THRUST BLOCKS SHALL BE INSTALLED AT EVERY CHANGE OF DIRECTION.

HORIZONTAL BEND THRUST BLOCK REQUIRED TOTAL BEARING AREA						
PIPE SIZE (IN)	11 1/4° BEND	22 1/2° BEND	45° BEND	90° BEND	DEAD END	TEE
	AREA (SF)	AREA (SF)	AREA (SF)	AREA (SF)	AREA (SF)	AREA (SF)
4	0.4	0.7	1.4	2.6	1.8	1.8
6	0.7	1.5	2.9	5.3	3.7	3.7
8	1.3	2.5	4.9	9.1	6.4	6.4
10	1.9	3.8	7.4	13.7	9.7	9.7
12	2.7	5.3	10.5	19.4	13.7	13.7

* BLOCK HEIGHT (H) SHOULD BE CHOSEN SO THAT THE CALCULATED BLOCK WIDTH (B) VARIES BETWEEN ONE AND TWO TIMES THE HEIGHT, NFPA A.10.6.1.

THRUST BLOCKS FOR PLASTIC PIPE - 3000 PSF SOIL BEARING CAPACITY | NTS | 08

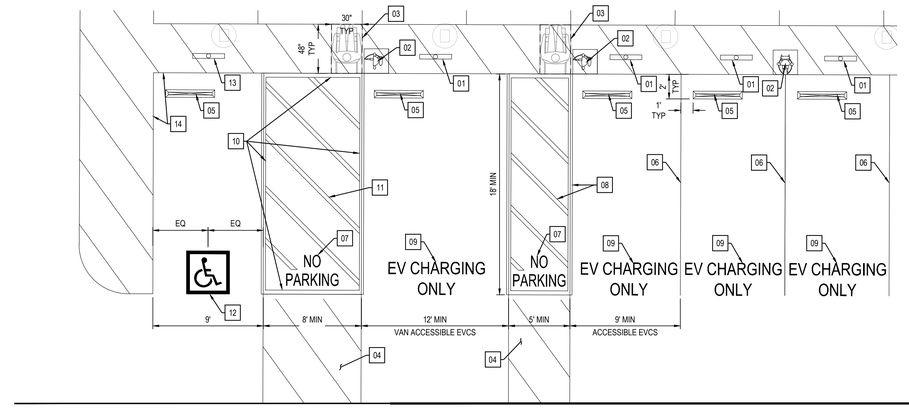

01 EV PARKING SIGN CENTERED ON PARKING STALL. PER DETAIL 04 THIS SHEET.

02 EV CHARGER PER LANDSCAPE MATERIALS PLAN

03 30" X 48" CLEAR GROUND SPACE

04 ACCESSIBLE ROUTE

05 PRE-CAST CONCRETE WHEEL STOP PER DETAIL 09 SHEET C7.01.

06 4" WIDE WHITE STALL STRIPING

07 WITHIN ACCESS AISLE PAINT THE WORDS 'NO PARKING' IN 12" HIGH WHITE LETTERS

08 ACCESS AISLE MARKED WITH 4" WIDE WHITE BORDER AND HATCHED LINES

09 PAINT THE WORDS 'EV CHARGING ONLY' IN 12" HIGH WHITE LETTERS CENTERED ON PARKING STALL AND WITH THE LOWEST EDGE OF THE LAST WORD ALIGNED WITH THE END OF THE STALL STRIPING.

10 4" WIDE BLUE STRIPING LOADING/UNLOADING ACCESS AISLE BORDER. COLOR NO. 15090 PER FEDERAL STD. NO. 595C.

11 ACCESS AISLE MARKED WITH 4" WIDE WHITE HATCHED LINES AT 3' O.C. SPACING

12 INTERNATIONAL SYMBOL OF ACCESSIBILITY EMBLEM. CENTERED AT END OF PARKING STALL. SEE DETAIL 07 SHEET C7.01.

13 VAN ACCESSIBLE PARKING SIGN CENTERED ON PARKING STALL PER DETAIL 06 SHEET C7.01.

14 4" WIDE BLUE STALL STRIPING, COLOR NO. 15090 PER FEDERAL STD. NO. 595C.

ACCESSIBLE AND EV PARKING STALLS | NTS | 03

01 NON-RESIDENTIAL WET BARREL FIRE HYDRANT WITH (2) 4" AND (1) 2-1/2" FIRE HOSE OUTLETS.

02 CONSTRUCT 6" THICK CONCRETE PAD REINFORCED WITH W.W.F. 1.6 X 1.6.

03 C-900 DR-18 PVC OR DIP WHERE REQUIRED. LATERAL SIZE PER PLAN. 6 - INCH MINIMUM.

04 8" X 6" REDUCER, IF REQUIRED, WITH P.O X F.E. (PVC LATERAL) OR M.J. X M.J. (DI LATERAL).

05 6" OR 8" F.E. X P.O. VALVE.

06 VALVE BOX PER DETAIL 09 THIS SHEET.

07 THRUST BLOCK PER DETAIL 08 THIS SHEET.

08 6" CAST IRON BREAK AWAY SPOOL WITH ONE 0.25"-V BREAK OFF GROOVE. SCORE LINE ABOVE PAD.

09 6" DUCTILE IRON RISER.

10 HEX HEAD STAINLESS STEEL BREAKAWAY SHEAR BOLTS AND NUTS (ASTM A307) WITH 3/4" NC THREAD AT FLANGE. HEX HEAD AT BOTTOM OF FLANGE.

11 BODY OF FIRE HYDRANT SHALL BE PAINTED WITH TWO COATS OF RUST-OLEUM, HIGH PERFORMANCE PROTECTIVE ENAMEL PER MANUFACTURE'S RECOMMENDATIONS. PAINT COLOR IS RED.

12 KEYED GATE VALVE STEM EXTENSION.

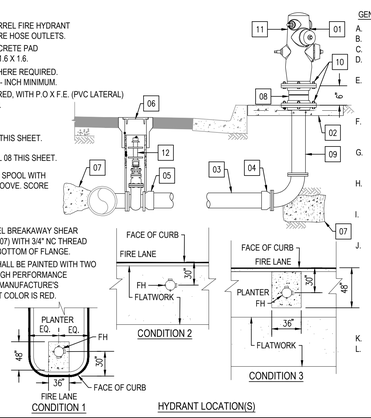

GENERAL NOTES:
A. FIRE HYDRANT SHALL BE ACCESSIBLE AND VISIBLE.
B. FIRE HYDRANT OUTLETS SHALL FACE FIRE LANE.
C. 3FT. MINIMUM CLEARANCE AROUND FIRE HYDRANT.
D. FIRE HYDRANT SHALL BE INDUSTRIAL OR COMMERCIAL RATED.
E. FIRE HYDRANT FOR INDUSTRIAL OR COMMERCIAL USE SHALL HAVE ONE 2 1/2-INCH OUTLET AND TWO 4-INCH OUTLETS. ALL OUTLETS SHALL HAVE REMOVABLE CAPS AND HAVE NATIONAL STANDARD HOSE THREADS.
F. FIRE HYDRANTS SHALL BE PROVIDED WITH 1 1/2-INCH SIZED PENTAGON-SHAPED OPERATING NUT AND 1 1/2-INCH CAP NUTS.
G. FIRE HYDRANTS SHALL BE WET-BARREL TYPE, WITH INDIVIDUAL VALVES FOR EACH OUTLET, AND SHALL CONFORM TO THE REQUIREMENTS OF AWWA C-503.
H. DUCTILE IRON BREAK-AWAY SPOOL SHALL BE BE PROVIDED FOR THE HYDRANT. THE SCORE SHALL BE PLACED ABOVE GRADE.
I. BREAK-AWAY BOLTS SHALL BE INSTALLED WITH THE THREADS TOWARDS THE TOP OF THE HYDRANT. BOLTS SHALL BE PACKED WITH CLEAR SILICON SEALANT.
J. ALL BOLTS USED FOR UNDERGROUND CONNECTIONS, INCLUDING T BOLTS, SHALL BE 316 STAINLESS STEEL. ASPHALTIC SEALANTS (AND OTHER OPAQUE SEALANTS) SHALL NOT BE USED TO COAT BOLTS AS TO ENSURE BOLTS CAN STILL BE VERIFIED AS 316 STAINLESS STEEL DURING INSPECTION. ALL FERROUS FITTINGS (WITH THE EXCEPTION OF 316 STAINLESS STEEL) SHALL BE CLEANED AND THOROUGHLY COATED WITH ASPHALT OR OTHER CORROSION RETARDING MATERIAL AFTER ASSEMBLY.
K. NO PAINT ON FIRE HYDRANT OUTLET THREADS ALLOWED.
L. A KEYED GATE VALVE SHALL BE PROVIDED FOR THE FIRE HYDRANT IN AN ACCESSIBLE LOCATION. VALVE SHALL BE LOCATED NO CLOSER THAN 5 AND NO FURTHER THAN 20 FEET FROM THE HYDRANT IN AN AREA THAT IS UNOBSTRUCTED AND CLEARLY VISIBLE. VALVES SHALL NOT BE LOCATED IN PARKING STALLS.

STANDARD PRIVATE FIRE HYDRANT | NTS | 07

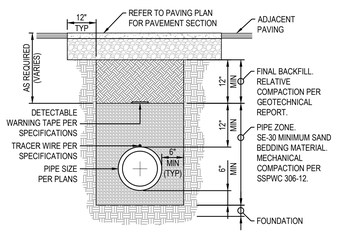

NOTES:
1. ALL PIPE SYSTEMS SHALL BE INSTALLED IN ACCORDANCE WITH ASTM D2774, "UNDERGROUND INSTALLATION OF THERMOPLASTIC PRESSURE PIPING", LATEST EDITION.
2. 36" MINIMUM COVER REQUIRED FOR INSTALLATIONS UNDER HARDSCAPE. 30" MINIMUM COVER FOR INSTALLATIONS UNDER PLANTED AREAS.
3. IF UNSTABLE FOUNDATION SOIL IS ENCOUNTERED, THE GEOTECHNICAL FIELD INSPECTOR SHALL DETERMINE OVEREXCAVATION DEPTH AND FOUNDATION RE-FILL MATERIAL.
4. CONTRACTOR SHALL PROVIDE HAND EXCAVATED "BELL HOLE" FOR EACH PIPE JOINT SO THAT THE WEIGHT OF PIPE DOES NOT BEAR ON THE BELL. CONTRACTOR SHALL RE-FILL AND HAND-TAMP EACH "BELL HOLE" PRIOR TO COMPLETING THE PLACEMENT OF PIPE BEDDING.

PIPE TRENCH - WATER | NTS | 06

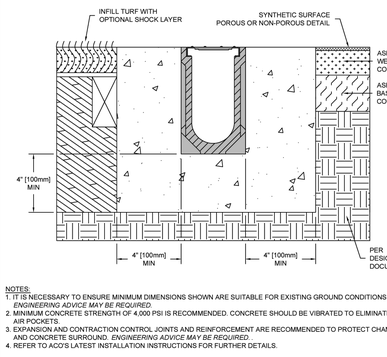

NOTES:
1. IT IS NECESSARY TO ENSURE MINIMUM DIMENSIONS SHOWN ARE SUITABLE FOR EXISTING GROUND CONDITIONS. *ENGINEERING ADVICE MAY BE REQUIRED.*
2. MINIMUM CONCRETE STRENGTH OF 4,000 PSI IS RECOMMENDED. CONCRETE SHOULD BE VIBRATED TO ELIMINATE AIR POCKETS.
3. EXPANSION AND CONTRACTION CONTROL JOINTS AND REINFORCEMENT ARE RECOMMENDED TO PROTECT CHANNEL AND CONCRETE SURROUND. *ENGINEERING ADVICE MAY BE REQUIRED.*
4. REFER TO ACO'S LATEST INSTALLATION INSTRUCTIONS FOR FURTHER DETAILS.

SPECIFICATION CLAUSE

SPORT 4000

GENERAL
THE SURFACE DRAINAGE SYSTEM SHALL BE POLYMER CONCRETE SYSTEM 4000 CHANNEL SYSTEM AS MANUFACTURED BY ACO POLYMER PRODUCTS, INC.

MATERIALS
CHANNELS SHALL BE MANUFACTURED FROM POLYESTER RESIN POLYMER CONCRETE. MINIMUM PROPERTIES OF POLYMER CONCRETE WILL BE AS FOLLOWS:

COMPRESSIVE STRENGTH:	14,000 PSI
FLEXURAL STRENGTH:	4,000 PSI
TENSILE STRENGTH:	1,500 PSI
WATER ABSORPTION:	0.07%
FROST PROOF	YES
DILUTE ACID AND ALKALI RESISTANT	YES
B117 SALT SPRAY TEST COMPLIANT	YES

THE SYSTEM SHALL BE 4" (100mm) NOMINAL INTERNAL WIDTH AND A 1" (155mm) OVERALL WIDTH. ALL CHANNELS SHALL BE INTERLOCKING WITH A MALE/FEMALE JOINT.

4002 CHANNEL : INVERT DEPTH - 4.65"
4010 CHANNEL : INVERT DEPTH - 6.54"
4020 CHANNEL : INVERT DEPTH - 8.90"
4030 CHANNEL : INVERT DEPTH - 11.26"

STANDARD ACO DRAIN GRATES AND LOCKING DEVICES ARE USED. SEE SEPARATE SPECIFICATION SHEETS FOR INFORMATION.

THE COMPLETE DRAINAGE SYSTEM SHALL BE BY ACO POLYMER PRODUCTS, INC. ANY DEVIATION OR PARTIAL SYSTEM DESIGN AND/OR IMPROPER INSTALLATION WILL VOID ANY AND ALL WARRANTIES PROVIDED BY ACO POLYMER PRODUCTS, INC.

THE SYSTEM SHALL BE INSTALLED IN ACCORDANCE WITH THE MANUFACTURER'S INSTRUCTIONS AND RECOMMENDATIONS.
REFER TO ARCHITECT'S PLANS FOR TRENCH AND CATCH BASIN LOCATION.

S4000-FECTS
ACO
DATE: 12/04/13

SYSTEM 4000:
Full Exposed Concrete, Infill Turf & Synthetic Surface
INSTALLATION DRAWING - ACO SPORT

ACO Polymer Products, Inc.
825 W. Beechcraft St. Casa Grande, AZ 85122 Tel: 520-421-9988 Fax: 520-421-9899
P.O. Box 245 Chardon, OH 44024 Tel: 440-285-7000 Fax: 440-285-8517
4211 Pleasant Rd. Fort Mill, SC 29708 Tel: 800-543-4764 Fax: 803-802-1063

Arizona Tel: 888-490-9552 e-mail: sales@acousa.com Ohio Tel: 800-543-4764 www.acousa.com South Carolina Tel: 800-622-2377

TRENCH DRAIN | NTS | 02

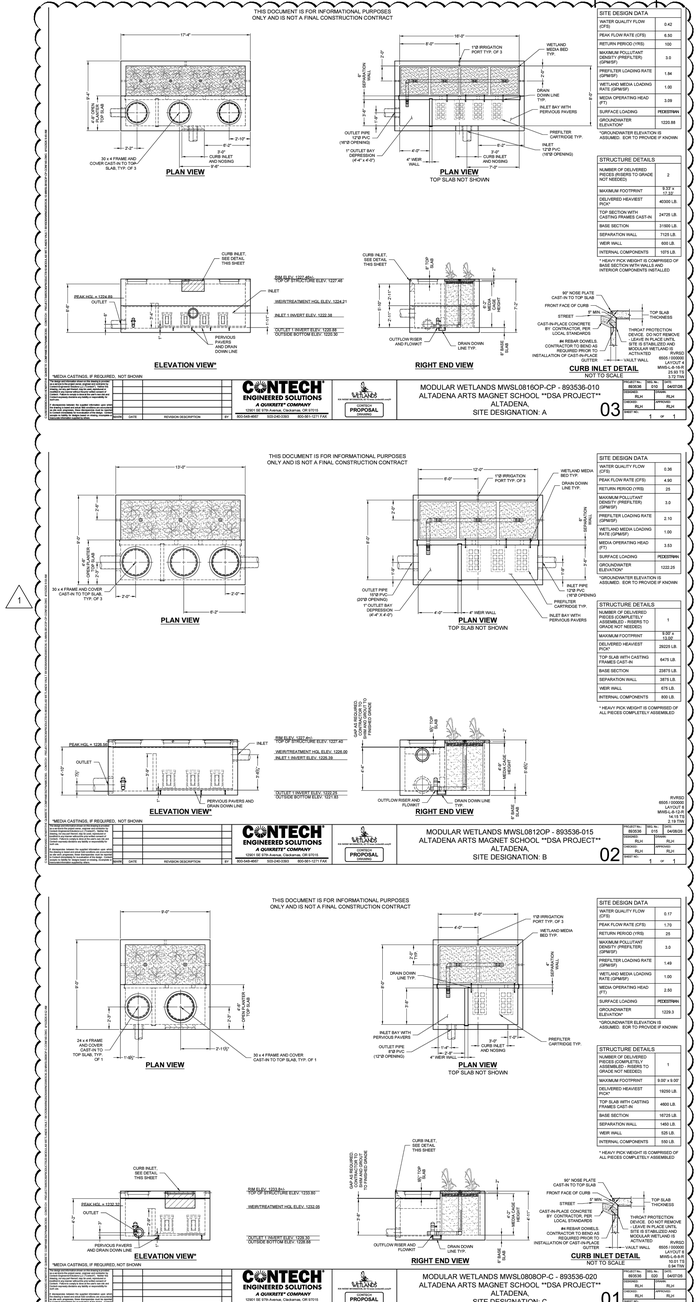

MODULAR WETLAND STRUCTURE | NTS | 01

LPA
ARCHITECTURE ENGINEERING INTERIOR DESIGN
LANDSCAPE ARCHITECTURE PLANNING
949-261-1001 Office
LPADesignStudios.com
5301 California Avenue, Suite 100
Irvine, California 92617
REGISTERED PROFESSIONAL ENGINEER KATHLEEN M. SPINNEY R.C.E. 68369 EXP. 9-30-27 CIVIL STATE OF CALIFORNIA
THE JOBSON FAMILY FOUNDATION
CONCEPT DESIGN:
Landscape Architect
Helle Nebelong
Denmark
hellenebelong.com

This document and all other project documents, ideas, aesthetics and designs incorporated therein are instruments of service. All project documents are copyright protected, are the property of LPA, Inc. (LPA) and cannot be lawfully used in whole or in part for any project or purpose except as set forth in the contractual agreement between LPA and its Client. The unauthorized disclosure and/or use of the project documents (including the creation of derivative works), may give rise to liability for copyright infringement, unlawful disclosure, use or misappropriation of property rights held by LPA. The unauthorized use of the project documents will give rise to the recovery of monetary losses and damages including attorney fees and costs for which the unauthorized user will be held liable.
Project documents describe the design intent of the work and are not a representation of as-built or existing conditions. LPA is not responsible for any discrepancies between the project documents and the existing conditions.
© LPA, Inc.

ALTADENA ARTS MAGNET SCHOOL

743 E Calaveras ST.
Altadena, CA 91001

Developed for
PUSD

Revision	Date
ADDENDUM 1	04/28/2026

Submittal	Date
100% SCHEMATIC DESIGN	12/08/2025
DSA SUBMITTAL	02/02/2026
DSA SUBMITTAL V2	03/13/2026

Job Number	33366
Checked By	KS
Scale	NTS

DETAILS

C7.02

ABBREVIATIONS

&	AND	GA.	GAUGE
∠	ANGLE	GALV.	GALVANIZED
@	AT	GND.	GROUND
℄	CENTERLINE	GR.	GRADE
Ø	DIAMETER OR ROUND	HDR	HEADER
#	POUND OR NUMBER	HT.	HEIGHT
ADJ.	ADJACENT	LT.	LIGHT
AGGR.	AGGREGATE	MAX.	MAXIMUM
AL.	ALUMINUM	MET.	METAL
APPROX.	APPROXIMATE	MFR.	MANUFACTURER
ARCH.	ARCHITECTURAL	MIN.	MINIMUM
AC.	ASPHALT	MTD.	MOUNTED
ACC.	ACCESSIBLE	MTL.	MATERIAL
B.C.R.	BEGINNING OF CURVE RADIUS	N.I.C.	NOT IN CONTRACT
B.O.C.	BACK OF CURB	N.T.S.	NOT TO SCALE
B.O.W.	BOTTOM OF WALL	O.C.	ON CENTER
B.O.S.	BOTTOM OF SLOPE	O.D.	OUTSIDE DIAMETER (DIM.)
BLDG.	BUILDING	PA	PLANTING AREA
BLK.	BLOCK	PED.	PEDESTRIAN
C.E.	CIVIL ENGINEER	PRCST.	PRECAST
C.I.P.	CAST IN PLACE	P.I.P.	POURED IN PLACE
CLKG.	CAULKING	P.O.T.	POINT OF TANGENCY
CMU.	CONCRETE MASONRY UNIT	P.T.S.	POST TENSION SLAB
CONC.	CONCRETE	QTY	QUANTITY
CONSTR.	CONSTRUCTION	R.	RISER
CONT.	CONTINUOUS	RAD.	RADIUS
CTR.	CENTER	REINF.	REINFORCED
D.A.	DISABLED ACCESS	REQ.	REQUIRED
DET.	DETAIL	SCHED.	SCHEDULE
DIA.	DIAMETER	SHT.	SHEET
DIM.	DIMENSION	SPEC.	SPECIFICATION
DN.	DOWN	S.S.	STAINLESS STEEL
DWGS.	DRAWINGS	STD.	STANDARD
E.J.	EXPANSION JOINT	STRL.	STRUCTURAL
EL.	ELEVATION	T.	TREAD
ELEC.	ELECTRICAL	T.C.	TOP OF CURB
EQ.	EQUAL	T.O.S.	TOP OF SLOPE
EXP.	EXPANSION	T.O.W.	TOP OF WALL
EXT.	EXTERIOR	TYP.	TYPICAL
F.G.	FINISH GRADE	TBD.	TO BE DETERMINED
F.S.	FINISH SURFACE	VEH.	VEHICULAR
F.O.B.	FACE OF BUILDING	VERT.	VERTICAL
F.O.C.	FACE OF CURB	W/	WITH
F.O.W.	FACE OF WALL	W/O	WITHOUT

PLANTING NOTES

1. REFER TO CIVIL ENGINEER'S DRAWINGS FOR UTILITY LOCATIONS, TREE SUBDRAINAGE STUBOUTS, (IF REQUIRED), AND FINAL GRADING. IF ACTUAL SITE CONDITIONS VARY FROM WHAT IS SHOWN ON THE LANDSCAPE ARCHITECT'S DRAWINGS, THE CONTRACTOR SHALL CONTACT THE OWNER'S AUTHORIZED REPRESENTATIVE AND LANDSCAPE ARCHITECT FOR DIRECTION AS TO HOW TO PROCEED.
2. VERIFY LOCATIONS OF ALL PERTINENT EXISTING AND PROPOSED SITE IMPROVEMENTS. IF ANY PART OF THIS PLAN CANNOT BE FOLLOWED DUE TO SITE CONDITIONS, CONTACT THE LANDSCAPE ARCHITECT FOR INSTRUCTION PRIOR TO COMMENCING WORK.
3. EXACT LOCATIONS OF PLANT MATERIALS SHALL BE REVIEWED BY THE LANDSCAPE ARCHITECT IN THE FIELD PRIOR TO INSTALLATION. LANDSCAPE ARCHITECT RESERVES THE RIGHT TO ADJUST PLANTS TO EXACT LOCATION IN FIELD.
4. CONTRACTOR SHALL BE RESPONSIBLE FOR VERIFYING ALL PLANT COUNTS AND SQUARE FOOTAGES. QUANTITIES SHOWN ON PLANS TAKE PRECEDENCE OVER WRITTEN QUANTITIES IN "PLANTING LEGEND."
5. PROVIDE MATCHING FORMS AND SIZES FOR ALL PLANT MATERIALS WITHIN EACH SPECIES AND SIZE DESIGNATED ON THE DRAWINGS.
6. PRUNE NEWLY PLANTED TREES ONLY AS DIRECTED BY LANDSCAPE ARCHITECT.
7. ALIGNED AND EQUALLY SPACED, IN ALL DIRECTIONS, ALL SHRUBS TO BE AS DESIGNATED PER THESE NOTES AND DRAWINGS.
8. ALL TREES IN ROWS TO BE ALIGNED. (UNLESS NOTED OTHERWISE ON PLANS)
9. TREES SHALL BEAR SAME RELATION TO FINISH GRADE AS AT PLACE OF GROWTH.
10. FINISH GRADES OF ALL TURF AREAS SHALL BE (1") BELOW ADJACENT CURB OR PAVEMENT. FINISH GRADES OF ALL SHRUB AREAS SHALL BE (2-1/2") BELOW ADJACENT CURB, PAVEMENT OR HEADER.
11. CONTRACTOR SHALL SUBMIT FOR APPROVAL COLOR PHOTOS OF ALL TREES, SHRUBS, AND GROUNDCOVER. PHOTOS SHOULD INCLUDE A PERSON FOR SCALE PURPOSES, PHOTOS SHALL BE OF THE ACTUAL PLANT MATERIAL TO BE USED ON THE PROJECT. ALL PLANT MATERIAL SHALL BE OF A QUALITY AS DETERMINED BY THE LANDSCAPE ARCHITECT. MATERIAL FOUND UNSUITABLE FOR THE DESIGN OR SPECIFICATION INTENT WILL BE REJECTED.
12. PROVIDE A (3") LAYER OF MULCH AT PROPOSED TREE, SHRUB, AND GROUNDCOVER PLANTING AREAS, EXCEPT AREAS WITH JUTE MESHING.
13. CONTRACTOR SHALL CONDUCT AGRICULTURAL SUITABILITY AND FERTILITY SOILS TESTING PER SOIL PREPARATION SPECIFICATION. ANALYSIS SHALL INCLUDE RECOMMENDATIONS FOR SOIL PREPARATION AND BACKFILL MIX AS WELL AS RECOMMENDATIONS FOR POST MAINTENANCE FERTILIZATION. SUBMIT SOILS ANALYSES AND SAMPLES OF AMENDMENTS TO LANDSCAPE ARCHITECT FOR REVIEW PRIOR TO SOIL PREPARATION.
14. QUANTITIES LISTED ON PLANT LEGEND ARE PER SHEET. CONTRACTOR MUST VERIFY QUANTITIES GIVEN ON THE PLANS WITH ACTUAL QUANTITIES SHOWN.
15. PROVIDE ROOT BARRIERS IN ADDITION TO THOSE INDICATED ON THE PLANS FOR ALL TREES WITHIN 5' OF ANY HARDSCAPE.
16. NOT INSTALL WATERING BASINS AROUND TREES WHEN PLANTED IN TURF. PROVIDE A CIRCULAR TURF-FREE ZONE TO OUTSIDE EDGE OF ROOTBALL. PLACE ONLY 2-INCHES OF WOOD MULCH IN THIS AREA AND NO CLOSER THAN 4-INCHES FROM TRUNK.
17. PLANT ALL TREES A MIN. OF 5' FROM ANY UTILITIES. THE LANDSCAPE CONTRACTOR SHALL VERIFY THE LOCATION OF ALL UTILITIES PRIOR TO COMMENCING WORK.
18. TREES ARE TO BE A MINIMUM OF 5' AWAY FROM ANY HARDSCAPE SUCH AS CURBS, WALKS, ETC.
19. LANDSCAPE MAINTENANCE PERIOD IS 90 DAYS.
20. REFER TO SPECIFICATIONS FOR ADDITIONAL INFORMATION.

TREE REMOVAL AND PROTECTION NOTES

1. CONTRACTOR SHALL RETAIN THE SERVICES OF AN INDEPENDENT REGISTERED CONSULTING ARBORIST.
2. THE ARBORIST SHALL PROVIDE CONTRACTOR WITH RECOMMENDATIONS AND SPECIFICATIONS AS TO THE REMOVAL OF THE EXISTING TREE.
3. ARBORIST SHALL BE ON-SITE TO OBSERVE THE REMOVAL OF TREE.
4. THE ARBORIST SHALL BE CERTIFIED WITH THE AMERICAN SOCIETY OF CONSULTING ARBORISTS OR INTERNATION SOCIETY OF ARBORICULTURE.
5. CONTRACTOR SHALL FOLLOW ALL ARBORIST RECOMMENDATIONS AND SPECIFICATIONS, UNLESS OTHERWISE DIRECTED BY CLIENT/ARCHITECT.

LANDSCAPE GRADING AND DRAINAGE NOTES

1. REFER TO CIVIL ENGINEER'S GRADING PLANS FOR SITE GRADING, DRAINAGE, AND UTILITY LOCATIONS. IF ACTUAL SITE CONDITIONS VARY FROM WHAT IS SHOWN ON THE LANDSCAPE ARCHITECT'S DRAWINGS, THE CONTRACTOR SHALL CONTACT THE OWNER'S AUTHORIZED REPRESENTATIVE AND LANDSCAPE ARCHITECT FOR DIRECTION AS TO HOW TO PROCEED.
2. REFER TO CIVIL ENGINEER'S DRAWINGS FOR SUBDRAINAGE POINT OF IN CONNECTION TO STORM DRAIN.
3. THE CONTRACTOR SHALL REQUEST OBSERVATION AS REQUIRED 48 HOURS ADVANCE OF PERFORMING WORK.
4. THE CONTRACTOR SHALL NOTIFY UNDERGROUND SERVICE ALERT (USA 800/227-2600) OR DIG ALERT (800-422-4133) 48 HOURS PRIOR TO ANY EXCAVATION.
5. ALL GRADING OPERATIONS SHALL CONFORM TO LOCAL GUIDELINES.
6. FIELD VERIFY EXISTING UNDERGROUND UTILITIES. THE CONTRACTOR SHALL BE RESPONSIBLE FOR VERIFYING THE ACTUAL LOCATION AND ELEVATION IN THE FIELD PRIOR TO BEGINNING CONSTRUCTION. THE CONTRACTOR SHALL PROTECT ALL EXISTING UTILITIES AND SHALL BE RESPONSIBLE FOR ANY DAMAGE TO EXISTING UTILITIES ENCOUNTERED DURING CONSTRUCTION.
7. NO CHANGE IN CONTRACT PRICE WILL BE ALLOWED FOR ACTUAL OR CLAIMED DISCREPANCY BETWEEN EXISTING GRADE AND THOSE SHOWN ON PLANS AFTER CONTRACTOR HAS ACCEPTED EXISTING GRADES AND MOVED ONTO THE SITE.
8. ALL PROPOSED GRADES ARE TO MEET AND BLEND IN WITH EXISTING GRADING AT PROJECT LIMIT AND EXISTING SIDEWALK. PRECISE ELEVATIONS INDICATED ON PLANS TO BE VERIFIED IN FIELD TO AS-BUILT CONDITION.
9. THE DEBRIS CREATED BY LANDSCAPE GRADING OPERATIONS SHALL BECOME THE PROPERTY OF THE CONTRACTOR AND SHALL BE LEGALLY DISPOSED OF OFF-SITE.
10. FINAL LANDSCAPE GRADING SHALL BE REVIEWED BY THE LANDSCAPE ARCHITECT IN THE FIELD PRIOR TO INSTALLATION OF PLANTING.

LAYOUT AND MATERIALS NOTES

1. THE CONTRACTOR SHALL LAYOUT AND FIELD VERIFY ALL DIMENSIONS OF DRIVEWAY, PLANTERS, WALKS, SLOPES AND RELATED WORK PRIOR TO CONSTRUCTION. ANY DISCREPANCIES SHALL BE BROUGHT TO THE ATTENTION OF THE OWNER'S AUTHORIZED REPRESENTATIVE.
2. VERIFY LOCATIONS OF ALL PERTINENT EXISTING AND PROPOSED SITE IMPROVEMENTS. IF ANY PART OF THIS PLAN CANNOT BE FOLLOWED DUE TO SITE CONDITIONS, CONTACT THE LANDSCAPE ARCHITECT FOR INSTRUCTION PRIOR TO COMMENCING WORK.
3. WRITTEN DIMENSIONS SHALL TAKE PRECEDENCE OVER SCALE.
4. THIS DRAWING INCLUDES THE LOCATION OF AREA DRAINS FOR REFERENCE. REFER TO RELATED CIVIL ENGINEER'S DRAWINGS FOR CONSTRUCTION DETAILS AND UTILITY CONNECTIONS.
5. REFER TO ELECTRICAL ENGINEER'S DRAWINGS FOR LIGHT FIXTURE SCHEDULE AND CIRCUITRY AS NECESSARY.
6. REFER TO SOIL ENGINEER'S GEOTECHNICAL REPORT FOR SUB-BASE MATERIALS AND COMPACTION.
7. WHERE DIMENSIONS ARE CALLED AS "EQUAL", ALL REFERENCED ITEMS SHALL BE SPACED EQUALLY, MEASURED TO THEIR CENTERLINES.
8. ALL MEASUREMENTS ARE TO FACE OF WALL, CURB OR OTHER FIXED SITE IMPROVEMENT, UNLESS OTHERWISE NOTED. DIMENSIONS TO CENTERLINES AS INDICATED.
9. INSTALL ALL INTERSECTING ELEMENTS AT 90 DEGREES TO EACH OTHER UNLESS OTHERWISE NOTED.
10. ALL DRAINS/ BASINS SHOULD HAVE BLACK ATRIUM TYPE GRATES WITHIN SHRUBS/GROUNDCOVER AREAS AND BLACK FLAT TYPE GRATES IN TURF AREAS.
11. DUE TO THE INTRICATE NATURE OF THE CURVED DESIGN THROUGHOUT, CONTRACTOR SHALL USE THE CAD FILE (DWG OR DFX) USING AN RTK OR PPK EQUIPMENT.
12. THE DIMENSIONS SHOWN ON THE LAYOUT AND THE ENLARGEMENT SHEETS REFLECT DESIGN INTENT, BUT FINAL CONSTRUCTION FIELD STAKING TO BE DONE BY USE OF THE CAD FILE AND RTK OR PPK EQUIPMENT.

1

SPORTS EQUIPMENT LEGEND

SYM.	DESC.	MANUF.	MODEL #	COLOR	FINISH/PTRN.	DET.	QTY.
	NATURAL TURF SURFACING	DELTA BLUEGRASS	TIFTUF; 3/4"BIG ROLL SOD	GREEN	-	06/ L5.05	11,948.46 SQ. FT.
	BASKETBALL (FAN SHAPED) BACKBOARD / POLE WITH GOAL/NET (CFCI) 1	LA STEELCRAFT	POST: LA-1256PC BACKBOARD: 11X GOAL/NET: HD600	ALUMINUM BACKBOARD	GALV. POWDERCOATED. BLACK	01/ L5.05	POST: 4 BACK-BOARD: 4 GOAL/ NET: 4

NOTE: CONTRACTORS TO BID ALL ITEMS AS CONTRACTOR INSTALLED INCLUDING ITEMS NOTED OFOI.

1

GENERAL NOTES

1. BASE INFORMATION INCLUDING THE LOCATION OF PROPERTY LINES, EASEMENTS, BUILDINGS, ROADS AND CURBS HAVE BEEN TAKEN FROM THE CIVIL ENGINEER'S DRAWINGS. REFER TO CIVIL ENGINEER'S DRAWINGS FOR ADDITIONAL INFORMATION.
2. REFER TO THE CIVIL ENGINEER'S DRAWINGS FOR PROPOSED UTILITY INFORMATION INCLUDING STORM DRAIN, SEWER, WATER, ELECTRICAL, GAS, TELEPHONE AND CABLE TV.
3. REFER TO CITY AND/OR COUNTY STANDARD PLANS AND SPECIFICATIONS WHERE APPLICABLE.
4. VERIFY SITE INFORMATION, INCLUDING PROPERTY LINES, EXISTING ABOVE GROUND AND BELOW GROUND UTILITIES AND STRUCTURES, AND OTHER INFORMATION AFFECTING THE SCOPE OF WORK INCLUDED ON THESE DRAWINGS. IF ACTUAL SITE CONDITIONS VARY FROM WHAT IS SHOWN ON THE LANDSCAPE ARCHITECT'S DRAWINGS, THE CONTRACTOR SHALL CONTACT THE OWNER'S AUTHORIZED REPRESENTATIVE AND THE LANDSCAPE ARCHITECT FOR DIRECTION ON HOW TO PROCEED.
5. EXCAVATION IN THE VICINITY OF UTILITIES AND EXISTING MATERIALS SHALL BE UNDERTAKEN WITH CARE. THE CONTRACTOR BEARS FULL RESPONSIBILITY FOR THIS WORK. ANY DAMAGE CAUSED BY ANY PERSON, VEHICLE, EQUIPMENT, OR TOOL RELATED TO THE EXECUTION OF THE CONTRACT SHALL BE REPAIRED IMMEDIATELY AT NO EXPENSE TO THE OWNER.
6. CONTRACTOR SHALL BE RESPONSIBLE FOR ANY COORDINATION REQUIRED TO ACCOMPLISH ALL CONSTRUCTION OPERATIONS. ALL PIPING, CONDUIT, SLEEVES, ETC., SHALL BE SET IN PLACE PRIOR TO INSTALLATION OF CONSTRUCTION ITEMS.
7. CONTRACTOR SHALL BE RESPONSIBLE TO CONSULT WITH SITE SUPERINTENDENT, APPROPRIATE AGENCIES AND PLANS, FOR THE LOCATIONS OF ALL UNDER-GROUND UTILITIES, PIPES AND STRUCTURES. CONTRACTOR SHALL TAKE SOLE RESPONSIBILITY FOR ANY COST INCURRED DUE TO DAMAGE OF SAID UTILITIES.
8. CONTRACTOR SHALL NOT WILLFULLY PROCEED WITH CONSTRUCTION AS DESIGNED WHEN IT IS OBVIOUS THAT UNKNOWN OBSTRUCTIONS, AREA DISCREPANCIES AND/OR GRADE DIFFERENCES EXIST THAT MAY NOT HAVE BEEN KNOWN DURING DESIGN. SUCH CONDITIONS SHALL BE IMMEDIATELY BROUGHT TO THE ATTENTION OF THE OWNER'S AUTHORIZED REPRESENTATIVE. THE CONTRACTOR SHALL ASSUME FULL RESPONSIBILITY FOR ALL NECESSARY REVISIONS DUE TO FAILURE TO GIVE SUCH NOTIFICATIONS.
9. CONTRACTOR IS RESPONSIBLE FOR REPLACEMENT OF ANY EXISTING MATERIALS THAT ARE DAMAGED DURING CONSTRUCTION.
10. PRIOR TO INSTALLATION OF ANY CONSTRUCTION ITEM, FORMS WITH STEEL IN PLACE AND COMPACTED SUBGRADE COMPLETE, SHALL BE OBSERVED AND REVIEWED BY THE LANDSCAPE ARCHITECT.
11. ALL WALLS AND WALKS SHOULD HAVE SMOOTH, CONTINUOUS CURVES AS INDICATED ON PLANS.
12. ALL PROPERTY LINES, LOT LINES, AND TOP OF SLOPE LINES SHALL BE VERIFIED PRIOR TO COMMENCING WORK.
13. ALL ELECTRICAL JUNCTION BOXES FOR LIGHTS SHALL BE IN PLANTING AREAS AND LOCATION REVIEWED BY THE LANDSCAPE ARCHITECT. STAKE LOCATION PRIOR TO INSTALLATION.
14. SEE CIVIL ENGINEER'S DRAWINGS FOR CURBS AND A/C PAVING.
15. REFER TO CIVIL ENGINEER'S DRAWINGS FOR ELEVATIONS AND LOCATION OF DRAINAGE STRUCTURES PRIOR TO INSTALLATION OF WALKS, FOOTINGS AND OTHER STRUCTURES.
16. REFER TO GEOTECHNICAL REPORT FOR ADDITIONAL INFORMATION. IF NOTES ON THE PLANS DIFFER FROM THE GEOTECHNICAL REPORT, PROVIDE THE MOST STRINGENT REQUIREMENT.
17. RAISE ALL VAULTS/UTILITIES BOXES TO GRADE WITHIN LIMITS OF WORK. FIELD VERIFY PRIOR TO BID.

MWELO REQUIREMENTS

A.	WATER EFFICIENT LANDSCAPE WORKSHEET, HYDROZONE INFORMATION TABLE, WATER BUDGET CALCULATIONS	SHEET L6.03
B.	LANDSCAPE DESIGN PLAN	SHEET L7.01
C.	IRRIGATION DESIGN PLAN	SHEET L6.01

LANDSCAPE MAINTENANCE STATEMENT

1. ALL LANDSCAPE IMPROVEMENTS WILL BE MAINTAINED BY PROPERTY OWNER.

BOULDER LEGEND

SYM.	DESC.	MANUF.	COLOR	QTY.	TYP. DET.
A	3' DIAMETER	SOUTHWEST BOULDERS	NAVAJO	149	FREESTANDING: 12/L5.01 RETAINING WALL: 16/L5.04
B	2' DIAMETER	SOUTHWEST BOULDERS	NAVAJO	289	FREESTANDING: 12/L5.01 RETAINING WALL: 16/L5.04
C	2.5' DIAMETER	SOUTHWEST BOULDERS	NAVAJO	10	18/L5.01
D	1.5' DIAMETER	SOUTHWEST BOULDERS	NAVAJO	13	18/L5.01
E	5'X4' TRIANGULAR SHAPE	SOUTHWEST BOULDERS	NAVAJO	1	22/L5.04
F	2.5'X1.5' TRIANGULAR SHAPE	SOUTHWEST BOULDERS	NAVAJO	1	22/L5.04
	3.5'X3.5'X1.25' BOULDER TERRACED WALL	EDEN VALDERS LIMESTONE	BUFF	350 LINEAR FOOT	02/L5.04

NOTE:
1. BOULDER FINAL LOCATION SHALL BE VERIFIED IN THE FIELD BY LANDSCAPE ARCHITECT.
2. LANDSCARE ARCHITECT SHALL BE NOTIFIED ONE (1) WEEK PRIOR TO INSTALLATION
3. BOULDERS ARE OWNER FURNISHING/CONTRACTOR INSTALL

1

SHEET INDEX

L0.01 LANDSCAPE NOTES AND SCHEDULES

L1.01 MATERIALS PLAN

L2.01 LAYOUT PLAN

L3.01 SITE MATERIALS AND LAYOUT ENLARGEMENT PLAN

L4.01 SITE SECTIONS AND ELEVATIONS
L4.02 SITE SECTIONS AND ELEVATIONS
L4.03 SITE SECTIONS AND ELEVATIONS

L5.01 CONSTRUCTION DETAILS
L5.02 CONSTRUCTION DETAILS
L5.03 CONSTRUCTION DETAILS
L5.04 CONSTRUCTION DETAILS
L5.05 CONSTRUCTION DETAILS
L5.06 CONSTRUCTION DETAILS

L6.01 IRRIGATION PLANS
L6.02 IRRIGATION LEGEND AND NOTES
L6.03 IRRIGATION DETAILS

L7.01 PLANTING PLAN
L7.02 PLANTING DETAILS

L8.01 STRIPING PLAN

PE1.01 PLAY EUIPMENT PLAN

GENERAL SCOPE OF WORK

1. SITEWORK INCLUDING CONCRETE HARDSCAPE
2. CONCRETE RETAINING WALLS
3. TUBULAR STEEL FENCING AND ASSOCIATED GATES
4. LIGHT POLES
5. PLANTING AND IRRIGATION
6. NATURAL TURF SURFACING
7. ATHLETIC FIELD IMPROVEMENTS

SITE FURNISHINGS LEGEND

SYM.	DESCRIPTION	MFR.	MODEL #	COLOR	FIN/ PTRN	QTY.	DET
	WOODEN BOAT (OFOI)	ANGEL CITY LUMBER 1	CUSTOM	PER MANUF.	SANDED + STAINED/ 40 GRIT	3	04/ L5.04
	WOODEN LOG (OFOI) 1	ANGEL CITY LUMBER	LOG BENCH (ROUND)	BLUE GUM EUCALYPTUS	SANDED + STAINED/ 40 GRIT	14	03/ L5.04
	WOODEN LOGS (OFOI)	ANGEL CITY LUMBER	CUSTOM	FOREST PONDEROSA / JEFFREY PINE	SANDED + STAINED/ 40 GRIT	45	08/ L5.04
	WOOD WALKING LOGS (OFOI)	ANGEL CITY LUMBER	CUSTOM	CEDAR REDWOOD	SANDED + STAINED/ 40 GRIT	(2) UNITS 11 LOGS PER UNIT	PER MANUF.
G	SEAL SCULPTURE (OFOI)	LISSY BOESEN DESIGN	0145	GREY RAL-7047	COLOUR PIGMENT	3	PER MANUF.
S	SEAL SCULPTURE (OFOI)	LISSY BOESEN DESIGN	0145	SAND RAL-9001	COLOUR PIGMENT	2	PER MANUF.
	LAYING CAT SCULPTURE (OFOI)	LISSY BOESEN DESIGN	8831	ORANGE RAL-2008	COLOUR PIGMENT	2	PER MANUF.
	SITTING CAT SCULPTIRE (OFOI)	LISSY BOESEN DESIGN	8832	ORANGE RAL-2008	COLOUR PIGMENT	1	PER MANUF.
	POWER PEDESTAL (CFCI)	LANDSCAPE FORMS	BM-PP-1G1U-LSIL	SILVER	POWDER COATED	3	19/ L5.05

1

PLAY EQUIPMENT LEGEND

SYM.	DESCRIPTION	MFR.	MODEL #	COLOR	FIN/ PTRN	QTY.	DET
	DOUBLE BAY SWING SET (OFCI)	EARTHSCAPE	DOUBLE BAY SWING - BELT + BASKET	POSTS: ALASKAN CEDAR SWING: BLACK	POSTS: WOOD SWING: FABRIC	3 POSTS; 3 SWINGS	PER MANUF.
	INCLINED MONKEY BARS - HIGH (OFCI)	EARTHSCAPE	INCLINED MONKEY BARS - HIGH	POSTS: BLACK LOCUST WOOD BARS: GRAY	POSTS: WOOD BARS: STAIN-LESS STEEL	4 POSTS; 1 SET OF BARS	PER MANUF.
	SINGLE HAMMOCK W/ FLEXFORM BASE (OFCI)	EARTHSCAPE	SINGLE HAMMOCK - SMALL	POSTS: BLACK LOCUST WOOD BARS HAMMOCK: BLACK FLEXFORM RUBBER HAMMOCK	POSTS: WOOD HAMMOCK: FLEXFORM	4 POSTS; 2 HAMMOCKS	PER MANUF.
	GIANT ROPE SWING (OFCI)	EARTHSCAPE	GIANT ROPE SWING	POSTS: HAND-PROCESSED ROBINIA PSEUDOACADIA SWING: ROPE	POSTS: WOOD SWING: ROPE	8 POSTS; 1 SWING	PER MANUF.
	ROPE CLIMBER (OFCI)	EARTHSCAPE	SPIDERWEB	POSTS: BLACK LOCUST ROPE: NYLON-WRAPPED STEEL CORE	POSTS: WOOD SWING: ROPE	2 POSTS	PER MANUF.
	STRAIGHT SLIDE (OFCI)	UPC PARKS	4' WIDE SLIDE W/ ADA TRANSFER PLATFORM	SLIDE: SHASTA WHITE RAIL: BEIGE	SLIDE: SMOOTH CONCRETE RAIL: POWDERCOATED	2	PER MANUF.

SITE LIGHTING LEGEND

SYM.	DESCRIPTION	DET/ SHT	COMMENTS
	SINGLE HEAD LIGHT POLE	11/ L5.05	PER ELEC
	SINGLE HEAD LIGHT POLE IN PARKING LOT	10/ L5.05	PER ELEC
	DOUBLE HEAD LIGHT POLE	11/ L5.05	PER ELEC
	THREE-HEAD EVENT POLE	11/ L5.05	PER ELEC
	FOUR-HEAD EVENT POLE	11/ L5.05	PER ELEC

NOTE: SEE ELECTRICAL PLANS FOR FIXTURES, LAMPS, AND SPECS.

MATERIALS KEYNOTE LEGEND

NOTE	DESCRIPTION	DET/ SHT	COLOR / FINISH
01	CONCRETE PAVING (CFCI)	01/ L5.01	NATURAL GREY/ TOPCAST 05
02	CONCRETE FLUSH CURB (CFCI)	09/ L5.01	NATURAL GREY/ MEDIUM BROOM 1
03	COBBLESTONE FLUSH CURB (OFCI)	24/ L5.01	ANTIQUE COBBLESTONES BY BOURGET BROS
04	DETECTABLE WARNING PAVERS (CFCI)	17/ L5.01	FEDERAL YELLOW 1
05	CONCRETE PAVING - TYPE 2 (OFCI)	01/ L5.01	SANTA FE 1117/ SMOOTH
06	CONCRETE PAVING - TYPE 3 (CFCI)	01/ L5.01	ADOBE 61078/ WOOD STAMPED
07	CONCRETE PAVING - TYPE 4 (OFCI)	01 L5.01	PALOMINO 5447/ SMOOTH
08	DECOMPOSTED GRANITE PAVING (CFCI)	10/ L5.01	PALM SPRINGS GOLD BY SOUTHWEST BOULDER
09	ROCK MULCH (OFCI)	11/ L5.01	SALMON BAY BY KRC ROCK 1
10	DRY CREEK (OFCI)	11/ L5.04	BUFF MEXICAN BEACH PEBBLE BY SOUTHWEST BOULDER
11	SAND (OFCI)	19/ L5.01 1	
12	BARK MULCH (OFCI)	PER SPECS	MEDIUM DECORATIVE BARK BY KRC ROCK
13	ENGINEERED WOOD FIBER (OFCI)	14/ L5.01	FIBARSYSTEM 300 BY FIBAR
14	ALUMINUM EDGING (OFCI)	16/ L5.01	BLACK BY PERMALOC
15	BOULDER (OFCI)	12/ L5.01	REFER TO BOULDER LEGEND ON L0.01
16	CONCRETE STAIR (CFCI)	10/ L5.02	NATURAL GREY/ TOPCAST 05
17	CONCRETE RAMP (CFCI)	01/ L5.01	NATURAL GREY/ TOPCAST 05
18	CONCRETE RETAINING WALL (CFCI)	01/ L5.02	NATURAL GREY/ TOPCAST 05
19	STONE VENEER SEATWALL (OFCI)	14/ L5.03	COLOR: TAN/ CAP: BLASTED/ VENEER: SPLITED FACE
20	CONCRETE CHEEK WALL AT STAIR (CFCI)	09/ L5.02	NATURAL GREY/ TOPCAST 05
21	HANDRAIL AT STAIR (CFCI)	11/ L5.02	GALVANIZED
22	HANDRAIL AT RAMP (CFCI)	12/ L5.02	GALVANIZED 1
23	COBBLESTONE FLUSH CURB AT SAND (OFCI)	20/ L5.01	ANTIQUE COBBLESTONES BY BOURGET BROS
24	TUBE STEEL FENCE (CFCI)	01/ L5.03	AMERISTAR, BLACK/ POWDERCOAT
25	TUBE STEEL PEDESTRIAN SINGLE SWING GATE (CFCI)	02/ L5.03	AMERISTAR, BLACK/ POWDERCOAT
26	TUBE STEEL VEHICULAR GATE (CFCI)	03/ L5.03	AMERISTAR, BLACK/ POWDERCOAT
27	WOODEN BRIDGE (OFCI)	09/ L5.04	CEDAR REDWOOD
28	BOULDER TERRACED WALL (OFCI)	02/ L5.04	REFER TO BOULDER LEGEND ON L0.01
29	PLAY STRIPING (CFCI)	- -	REFER TO STRIPING SHEET ON L5.06 1
30	PLAY EQUIPMENT	- -	REFER TO PLAYGROUND EQUIP. LEGEND IN L0.01
31	SITE LIGHTING (CFCI)	- -	REFER TO SITE LIGHTING LEGEND IN L0.01
32	BOULDER RETAINING WALL (OFCI)	16/ L5.04	REFER TO BOULDER LEGEND ON L0.01
33	CONCRETE FLUSH CURB AT FENCE (CFCI)	08/ L5.01	NATURAL GREY/ MEDIUM BROOM
34	SITE FURNITURE	- -	REFER TO SITE FURNISHINGS LEGEND IN L0.01
35	STONE TURTLE (OFOI)	01/ L5.04	REFER TO BOULDER LEGEND LEGEND IN L0.01
36	BOULDER SNAKE (OFOI)	22/ L5.04	REFER TO BOULDER LEGEND LEGEND IN L0.01
37	DRY CREEK BASIN (OFCI)	17/ L5.05	SQUARE COBBLE: COSTAL BLUFF BY COUGAR STONE ROUND COBBLE: BUFF MEXICAN BEACH BY SOUTHWEST BOULDER
38	DRY CREEK CASCADE (OFCI)	18/ L5.05	BUFF MEXICAN BEACH PEBBLE BY SOUTHWEST BOULDER
39	BOULDER SPIRAL (OFOI)	18/ L5.05	REFER TO BOULDER LEGEND ON L0.01

ATHLETIC FIELD KEYNOTE LEGEND

NOTE	DESCRIPTION	DET/ SHT	COLOR / FINISH
B01	NATURAL TURF SYSTEM	06/ L5.05	REFER TO SPORTS EQUIP. LEGEND ON L0.01
B02	BASKETBALL GOAL	01/ L5.05	REFER TO SPORTS EQUIP. LEGEND ON L0.01
B03	BASKETBALL COURT STRIPING	02/ L5.05	COLOR TBD/ STREETBOND
B04	KICKBALL COURT STRIPING	17/ L5.05	COLOR TBD/ STREETBOND

REFERENCE KEYNOTE LEGEND

NOTE	DESCRIPTION	DET/ SHT	COMMENTS
A	EXISTING PAVING		PROTECT IN PLACE
B	EXISTING CURB		PROTECT IN PLACE
C	EXISTING GUTTER		PROTECT IN PLACE
D	EXISTING WALL		PROTECT IN PLACE
E	EXISTING FENCE/GATE		PROTECT IN PLACE
F	EXISTING UTILITY		PROTECT IN PLACE
G	A.C. PAVING	PER CIVIL	DURASHIELD ON ALL A.C. PAVED SURFACES
H	CURB AND GUTTER	PER CIVIL	
J	CURB RAMP	PER CIVIL	
K	PAVEMENT STRIPING	PER CIVIL	
L	WHEEL STOP	PER CIVIL	
M	ADA SIGNAGE	PER CIVIL	
N	EV CHARGER	PER CIVIL	
P	PV CANOPY	PER OTHER	
Q	PAVILION	PER OTHER	
R	BIOFILTRATION SYSTEM	PER CIVIL	
S	TRENCH DRAIN	PER CIVIL	
T	EXISTING RAILING		PROTECT IN PLACE
U	EXISTING BUILDING COLUMN		PROTECT IN PLACE
W	DRIVEWAY	PER CIVIL	

SITE SYMBOLS LEGEND

SYM.	DESCRIPTION	SYM.	DESCRIPTION	DET.
←	DIRECTION OF RAMP; DOWN SLOPE		SAWCUT JOINT	02/ L5.01
+	EXISTING TREE PROTECT IN PLACE	— —	MATCHLINE	
PA	PLANTING AREA		PROPERTY LINE/ RIGHT OF WAY	

NOTE: UTILITIES SHOWN ARE FOR REFERENCE ONLY. SEE CIVIL AND ELEC DWGS FOR DETAILS AND EXACT LOCATIONS. FINAL LOCATIONS TO BE REVIEWED BY LANDSCAPE ARCHITECT.

LPA

ARCHITECTURE ENGINEERING INTERIOR DESIG
LANDSCAPE ARCHITECTURE PLANNING

949-261-1001 Office

LPADesignStudios.com

5301 California Avenue, Suite 100
Irvine, California 92617

NOT FOR REGULATORY APPROVA
PERMITTING OR CONSTRUCTIO

THE JOBSON FAMILY FOUNDATION

CONCEPT DESIGN:
Landscape Architect
Helle Nebelong
Denmark
hellenebelong.com

This document and all other project documents, ideas aesthetics and designs incorporated therein are instru of service. All project documents are copyright protec are the property of LPA, Inc. (LPA) and cannot be law used in whole or in part for any project or purpose exc set forth in the contractual agreement between LPA a Client. The unauthorized disclosure and/or use of the project documents (including the creation of derivative works), may give rise to liability for copyright infringem unlawful disclosure, use or misappropriation of propert rights held by LPA. The unauthorized use of the proje documents will give rise to the recovery of monetary l and damages including attorney fees and costs for wh unauthorized user will be held liable.
Project documents describe the design intent of the w and are not a representation of as-built or existing conditions. LPA is not responsible for any discrepanc between the project documents and the existing condi

© LPA, Inc.

ALTADENA ARTS MAGNET SCHOOL

743 E CALAVERAS ST.
ALTADENA, CA 91001

Developed for

Revision	Date
Addendum 1	04/28/2026

Submittal	Date
100% SCHEMATIC DESIGN	12/05/2025
DSA SUBMITTAL	02/02/2026
DSA SUBMITTAL V2	03/13/2026

Job Number	33366
Checked By	AG /SC
Scale	AS NOTED

LANDSCAPE NOTES AND LEGENDS

L0.01

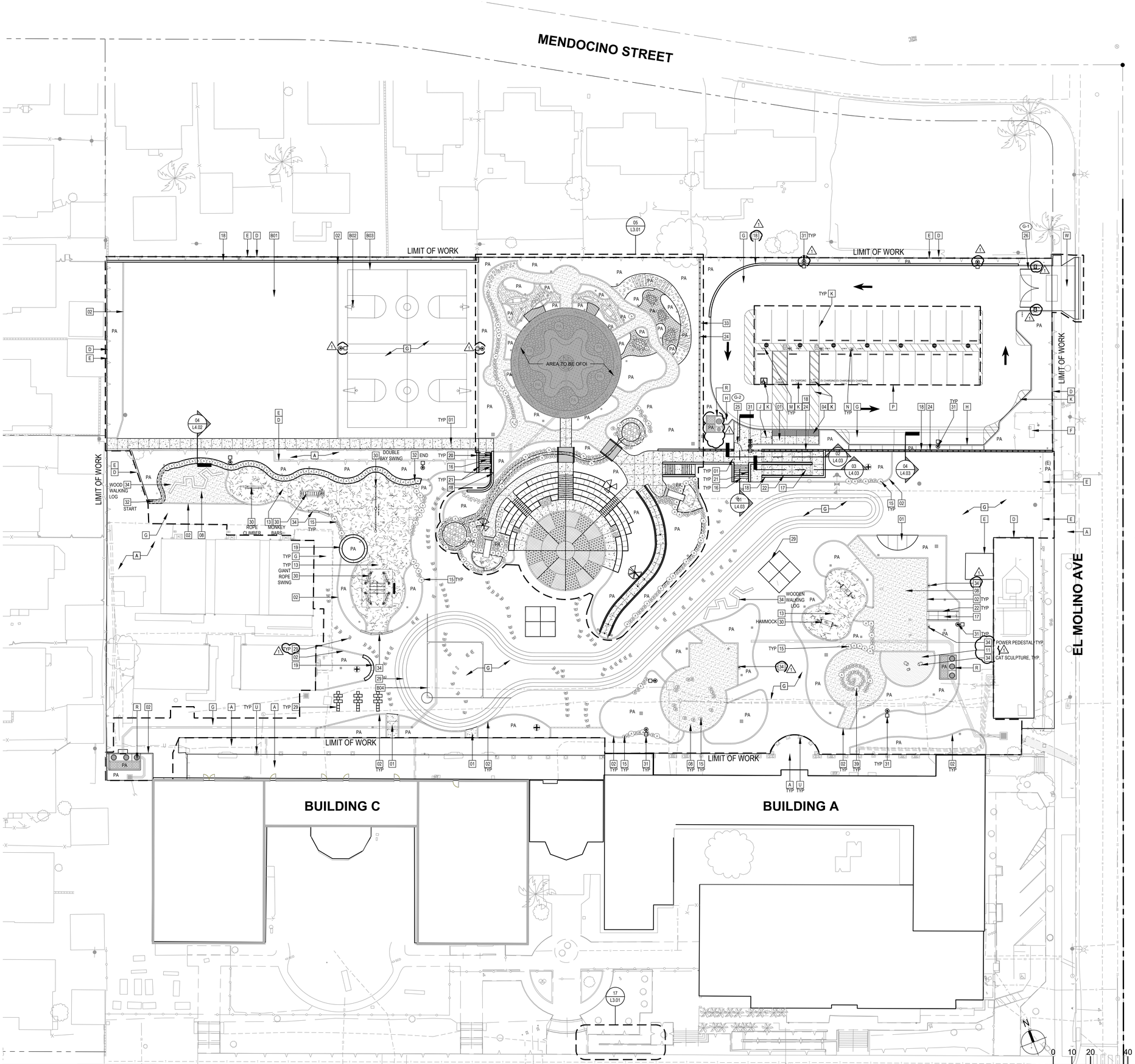

MATERIALS KEYNOTE LEGEND

NOTE	DESCRIPTION	DET/ SHT	COLOR / FINISH
01	CONCRETE PAVING (CFCI)	01/ L5.01	NATURAL GREY/ TOPCAST 05
02	CONCRETE FLUSH CURB (CFCI)	09/ L5.01	NATURAL GREY/ MEDIUM BROOM
03	COBBLESTONE FLUSH CURB (OFCI)	24/ L5.01	ANTIQUE COBBLESTONES BY BOURGET BROS
04	DETECTABLE WARNING PAVERS (CFCI)	17/ L5.01	FEDERAL YELLOW
05	CONCRETE PAVING - TYPE 2 (OFCI)	01/ L5.01	SANTA FE 1117/ SMOOTH
06	CONCRETE PAVING - TYPE 3 (OFCI)	01/ L5.01	ADOBE 61078/ WOOD STAMPED
07	CONCRETE PAVING - TYPE 4 (OFCI)	01 L5.01	PALOMINO 5447/ SMOOTH
08	DECOMPOSTED GRANITE PAVING (CFCI)	10/ L5.01	PALM SPRINGS GOLD BY SOUTHWEST BOULDER
09	ROCK MULCH (OFCI)	11/ L5.01	SALMON BAY BY KRC ROCK
10	DRY CREEK (OFCI)	11/ L5.04	BUFF MEXICAN BEACH PEBBLE BY SOUTHWEST BOULDER
11	SAND (OFCI)	19/ L5.01	
12	BARK MULCH (OFCI)	PER SPECS	MEDIUM DECORATIVE BARK BY KRC ROCK
13	ENGINEERED WOOD FIBER (OFCI)	14/ L5.01	FIBARSYSTEM 300 BY FIBAR
14	ALUMINUM EDGING (OFCI)	16/ L5.01	BLACK BY PERMALOC
15	BOULDER (OFCI)	12/ L5.01	REFER TO BOULDER LEGEND ON L0.01
16	CONCRETE STAIR (CFCI)	10/ L5.02	NATURAL GREY/ TOPCAST 05
17	CONCRETE RAMP (CFCI)	01/ L5.01	NATURAL GREY/ TOPCAST 05
18	CONCRETE RETAINING WALL (CFCI)	01/ L5.02	NATURAL GREY/ TOPCAST 05
19	STONE VENEER SEATWALL (OFCI)	14/ L5.03	COLOR: TAN/ CAP: BLASTED/ VENEER: SPLITED FACE
20	CONCRETE CHEEK WALL AT STAIR (CFCI)	09/ L5.02	NATURAL GREY/ TOPCAST 05
21	HANDRAIL AT STAIR (CFCI)	11/ L5.02	GALVANIZED
22	HANDRAIL AT RAMP (CFCI)	12/ L5.02	GALVANIZED
23	COBBLESTONE FLUSH CURB AT SAND (OFCI)	20/ L5.01	ANTIQUE COBBLESTONES BY BOURGET BROS
24	TUBE STEEL FENCE (CFCI)	01/ L5.03	AMERISTAR, BLACK/ POWDERCOAT
25	TUBE STEEL PEDESTRIAN SINGLE SWING GATE (CFCI)	02/ L5.03	AMERISTAR, BLACK/ POWDERCOAT
26	TUBE STEEL VEHICULAR GATE (CFCI)	03/ L5.03	AMERISTAR, BLACK/ POWDERCOAT
27	WOODEN BRIDGE (OFCI)	09/ L5.04	CEDAR REDWOOD
28	BOULDER TERRACED WALL (OFCI)	02/ L5.04	REFER TO BOULDER LEGEND ON L0.01
29	PLAY STRIPING (CFCI)	- -	REFER TO STRIPING SHEET ON L5.06
30	PLAY EQUIPMENT	-	REFER TO PLAYGROUND EQUIP. LEGEND IN L0.01
31	SITE LIGHTING (CFCI)	- -	REFER TO SITE LIGHTING LEGEND IN L0.01
32	BOULDER RETAINING WALL (OFCI)	16/ L5.04	REFER TO BOULDER LEGEND ON L0.01
33	CONCRETE FLUSH CURB AT FENCE (CFCI)	08/ L5.01	NATURAL GREY/ MEDIUM BROOM
34	SITE FURNITURE	- -	REFER TO SITE FURNISHINGS LEGEND IN L0.01
35	STONE TURTLE (OFOI)	01/ L5.04	REFER TO BOULDER LEGEND LEGEND IN L0.01
36	BOULDER SNAKE (OFOI)	22/ L5.04	REFER TO BOULDER LEGEND LEGEND IN L0.01
37	DRY CREEK BASIN (OFCI)	17/ L5.05	SQUARE COBBLE: COSTAL BLUFF BY COUGAR STONE ROUND COBBLE: BUFF MEXICAN BEACH BY SOUTHWEST BOULDER
38	DRY CREEK CASCADE (OFCI)	18/ L5.05	BUFF MEXICAN BEACH PEBBLE BY SOUTHWEST BOULDER
39	BOULDER SPIRAL (OFOI)	18/ L5.05	REFER TO BOULDER LEGEND ON L0.01

ATHLETIC FIELD KEYNOTE LEGEND

NOTE	DESCRIPTION	DET/ SHT	COLOR / FINISH
B01	NATURAL TURF SYSTEM	06/ L5.05	REFER TO SPORTS EQUIP. LEGEND ON L0.01
B02	BASKETBALL GOAL	01/ L5.05	REFER TO SPORTS EQUIP. LEGEND ON L0.01
B03	BASKETBALL COURT STRIPING	02/ L5.05	COLOR TBD/ STREETBOND
B04	KICKBALL COURT STRIPING	17/ L5.05	COLOR TBD/ STREETBOND

REFERENCE KEYNOTE LEGEND

NOTE	DESCRIPTION	DET/ SHT	COMMENTS
A	EXISTING PAVING		PROTECT IN PLACE
B	EXISTING CURB		PROTECT IN PLACE
C	EXISTING GUTTER		PROTECT IN PLACE
D	EXISTING WALL		PROTECT IN PLACE
E	EXISTING FENCE/GATE		PROTECT IN PLACE
F	EXISTING UTILITY		PROTECT IN PLACE
G	A.C. PAVING	PER CIVIL	DURASHIELD ON ALL A.C. PAVED SURFACES
H	CURB AND GUTTER	PER CIVIL	
J	CURB RAMP	PER CIVIL	
K	PAVEMENT STRIPING	PER CIVIL	
L	WHEEL STOP	PER CIVIL	
M	ADA SIGNAGE	PER CIVIL	
N	EV CHARGER	PER CIVIL	
P	PV CANOPY	PER OTHER	
Q	PAVILION	PER OTHER	
R	BIOFILTRATION SYSTEM	PER CIVIL	
S	TRENCH DRAIN	PER CIVIL	
T	EXISTING RAILING		PROTECT IN PLACE
U	EXISTING BUILDING COLUMN		PROTECT IN PLACE
W	DRIVEWAY	PER CIVIL	

SITE SYMBOLS LEGEND

SYM.	DESCRIPTION	SYM.	DESCRIPTION	DET.
	DIRECTION OF RAMP; DOWN SLOPE		SAWCUT JOINT	02/ L5.01
+	EXISTING TREE PROTECT IN PLACE		MATCHLINE	
PA	PLANTING AREA		PROPERTY LINE/ RIGHT OF WAY	

NOTE: UTILITIES SHOWN ARE FOR REFERENCE ONLY. SEE CIVIL AND ELEC DWGS FOR DETAILS AND EXACT LOCATIONS. FINAL LOCATIONS TO BE REVIEWED BY LANDSCAPE ARCHITECT.

LPA
ARCHITECTURE ENGINEERING INTERIOR DESIGN
LANDSCAPE ARCHITECTURE PLANNING
949-261-1001 Office
LPADesignStudios.com
5301 California Avenue, Suite 100
Irvine, California 92617

THE JOBSON FAMILY FOUNDATION

CONCEPT DESIGN:
Landscape Architect
Helle Nebelong
Denmark
hellenebelong.com

This document and all other project documents, ideas, aesthetics and designs incorporated therein are instruments of service. All project documents are copyright protected, are the property of LPA, Inc. (LPA) and cannot be lawfully used in whole or in part for any project or purpose except as set forth in the contractual agreement between LPA and its Client. The unauthorized disclosure and/or use of the project documents (including the creation of derivative works), may give rise to liability for copyright infringement, unlawful disclosure, use or misappropriation of property rights held by LPA. The unauthorized use of the project documents will give rise to the recovery of monetary losses and damages including attorney fees and costs for which the unauthorized user will be held liable.
Project documents describe the design intent of the work and are not a representation of as-built or existing conditions. LPA is not responsible for any discrepancies between the project documents and the existing conditions.

© LPA, Inc.

ALTADENA ARTS MAGNET SCHOOL

743 E CALAVERAS ST.
ALTADENA, CA 91001

Developed for
PASADENA UNIFIED SCHOOL DISTRICT

Revision	Date
Addendum 1	04/28/2026

Submittal	Date
100% SCHEMATIC DESIGN	12/05/2025
DSA SUBMITTAL	02/02/2026
DSA SUBMITTAL 1/2	03/13/2026

Job Number	33366
Checked By	AG /SC
Scale	1" = 20'

MATERIALS PLAN

L1.01

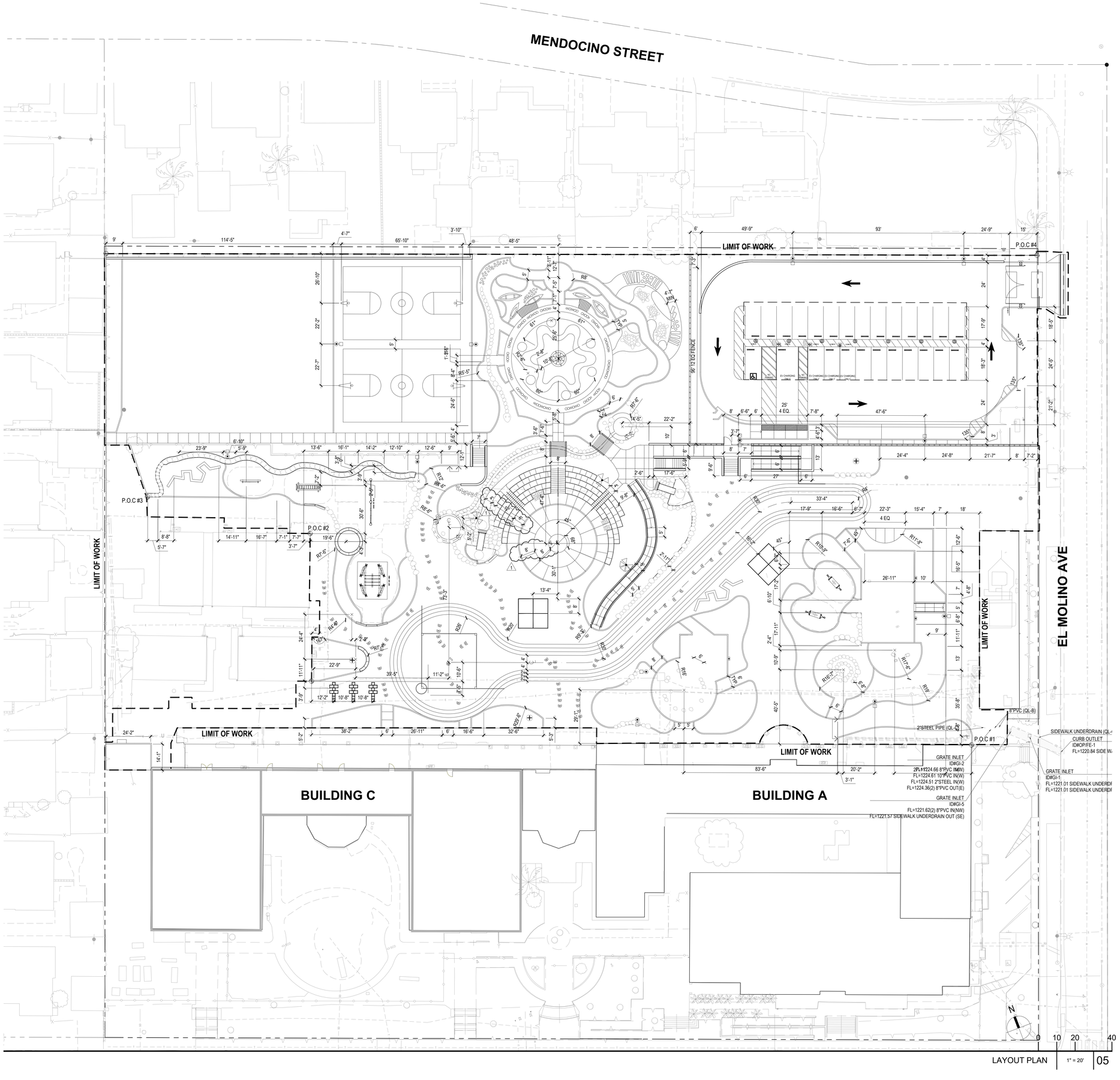

LAYOUT PLAN 1" = 20' 05

ADDITIONAL LAYOUT NOTES

1. SEE SHEET L0.01 GENERAL NOTES FOR ADDITIONAL LAYOUT INFORMATION.
2. PLAN MEASUREMENTS ARE TO FACE OF WALL, CURB, OR OTHER FIXED SITE IMPROVEMENT, UNLESS NOTED OTHERWISE ON PLANS.
3. LAYOUT OF SITE IMPROVEMENTS, THE NEW BUILDINGS, SHALL BE A CONTINUATION OF EXISTING CONDITIONS LAYOUT. ALL EXISTING CONDITION ALIGNMENTS SHALL BE FOLLOWED FOR THIS SCOPE. CONTRACTOR IS TO NOTIFY THE LANDSCAPE ARCHITECT OF ANY DISCREPANCY BETWEEN EXISTING ALIGNMENTS AND THESE PLANS PRIOR TO SHOP DRAWING SUBMITTAL AND CONSTRUCTION.
4. DUE TO THE INTRICATE NATURE OF THE CURVED DESIGN THROUGHOUT, CONTRACTOR SHALL USE THE CAD FILE (DWG OR DFX) USING AN RTK OR PPK EQUIPMENT.
5. THE DIMENSIONS SHOWN ON THE LAYOUT AND THE ENLARGEMENT SHEETS REFLECT DESIGN INTENT, BUT FINAL CONSTRUCTION FIELD STAKING TO BE DONE BY USE OF THE CAD FILE AND RTK OR PPK EQUIPMENT.

LAYOUT SYMBOL LEGEND

- POINT OF BEGINNING (P.O.B.)
- ALIGN
- CENTER LINE
- BASELINE

LPA

ARCHITECTURE ENGINEERING INTERIOR DESIG
LANDSCAPE ARCHITECTURE PLANNING

949-261-1001 Office

LPADesignStudios.com

5301 California Avenue, Suite 100
Irvine, California 92617

THE JOBSON FAMILY FOUNDATION

CONCEPT DESIGN:
Landscape Architect
Helle Nebelong
Denmark
hellenebelong.com

This document and all other project documents, ideas aesthetics and designs incorporated therein are instru of service. All project documents are copyright protec are the property of LPA, Inc. (LPA) and cannot be law used in whole or in part for any project or purpose exc set forth in the contractual agreement between LPA an Client. The unauthorized disclosure and/or use of the project documents (including the creation of derivative works), may give rise to liability for copyright infringem unlawful disclosure, use or misappropriation of proper rights held by LPA. The unauthorized use of the proje documents will give rise to the recovery of monetary l and damages including attorney fees and costs for wh unauthorized user will be held liable.
Project documents describe the design intent of the w and are not a representation of as-built or existing conditions. LPA is not responsible for any discrepanc between the project documents and the existing condi

© LPA, Inc.

ALTADENA ARTS MAGNET SCHOOL

743 E CALAVERAS ST.
ALTADENA, CA 91001

Developed for

Revision	Date
Addendum 1	04/28/2026

Submittal	Date
100% SCHEMATIC DESIGN	12/05/2025
DSA SUBMITTAL	02/02/2026
DSA SUBMITTAL V2	03/13/2026

Job Number	33366
Checked By	AG /SC
Scale	1" = 20'

LAYOUT PLAN

L2.01

WHEELCHAIR SEATING REQUIREMENTS		
	# OF SEATS	203
WS	WHEEL CHAIR SEATS (REQ SPACES / PROVIDED SPACES)	5 / 5
CS	COMPANION SEATS (REQ SPACES / PROVIDED SPACES)	5 / 5
	DESIGNATED AISLE SEATS (REQ SPACES / PROVIDED SPACES)	NOT APPLIED
SS	SEMI-AMBULATORY SEATS (REQ SPACES / PROVIDED SPACES)	3 / 3

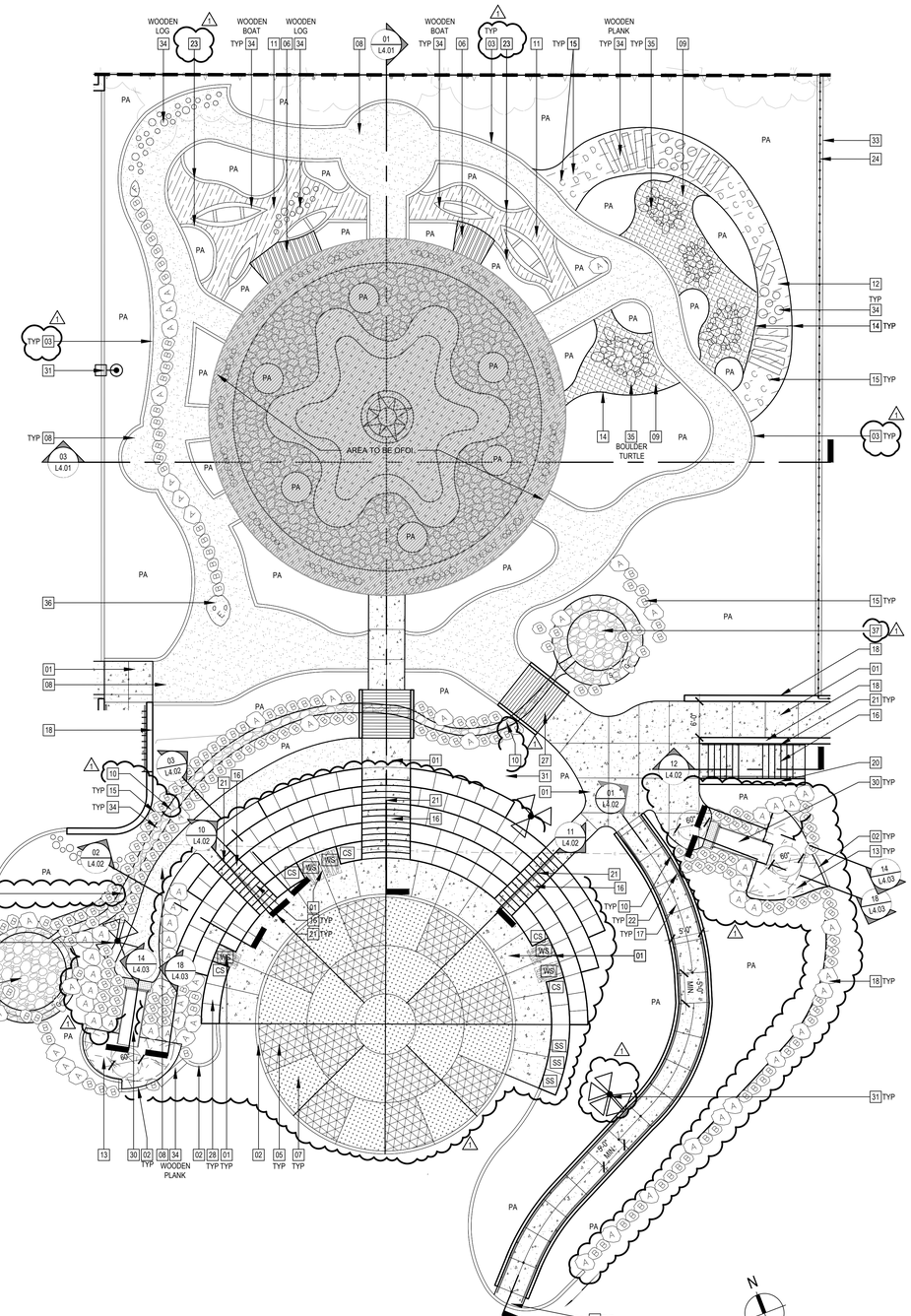

FRONT ENTRY RAMP MATERIALS ENLAGEMENT PLAN 1" = 10' 05

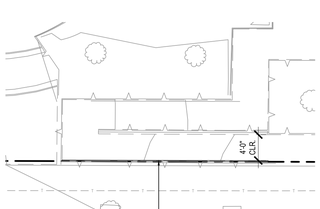

CUT EXISTING HANDRAIL AT THE CONNECTION TO THE GUARDRAIL POSTS.
SHORTEN THE ATTACHMENT ARM BY 2" AND WELD THE HANDRAIL BACK TO THE GUARDRAIL POSTS.

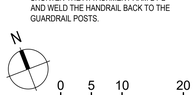

FRONT ENTRY RAMP MATERIALS ENLAGEMENT PLAN 1" = 10' 17

MATERIALS KEYNOTE LEGEND

NOTE	DESCRIPTION	DET/ SHT	COLOR / FINISH
01	CONCRETE PAVING (CFCI)	01/ L5.01	NATURAL GREY/ TOPCAST 05
02	CONCRETE FLUSH CURB (CFCI)	09/ L5.01	NATURAL GREY/ MEDIUM BROOM
03	COBBLESTONE FLUSH CURB (OFCI)	24/ L5.01	ANTIQUE COBBLESTONES BY BOURGET BROS
04	DETECTABLE WARNING PAVERS (CFCI)	17/ L5.01	FEDERAL YELLOW
05	CONCRETE PAVING - TYPE 2 (OFCI)	01/ L5.01	SANTA FE 11101/ SMOOTH
06	CONCRETE PAVING - TYPE 3 (OFCI)	01/ L5.01	ADOBE 61078/ WOOD STAMPED
07	CONCRETE PAVING - TYPE 4 (OFCI)	01 L5.01	PALOMINO 5447/ SMOOTH
08	DECOMPOSTED GRANITE PAVING (CFCI)	10/ L5.01	PALM SPRINGS GOLD BY SOUTHWEST BOULDER
09	ROCK MULCH (OFCI)	11/ L5.01	SALMON BAY BY KRC ROCK
10	DRY CREEK (OFCI)	11/ L5.04	BUFF MEXICAN BEACH PEBBLE BY SOUTHWEST BOULDER
11	SAND (OFCI)	19/ L5.01	
12	BARK MULCH (OFCI)	PER SPECS	MEDIUM DECORATIVE BARK BY KRC ROCK
13	ENGINEERED WOOD FIBER (OFCI)	14/ L5.01	FIBARSYSTEM 300 BY FIBAR
14	ALUMINUM EDGING (OFCI)	16/ L5.01	BLACK BY PERMALOC
15	BOULDER (OFCI)	12/ L5.01	REFER TO BOULDER LEGEND ON L0.01
16	CONCRETE STAIR (CFCI)	10/ L5.02	NATURAL GREY/ TOPCAST 05
17	CONCRETE RAMP (CFCI)	01/ L5.01	NATURAL GREY/ TOPCAST 05
18	CONCRETE RETAINING WALL (CFCI)	01/ L5.02	NATURAL GREY/ TOPCAST 05
19	STONE VENEER SEATWALL (OFCI)	14/ L5.03	COLOR: TAN/ CAP: BLASTED/ VENEER: SPLITED FACE
20	CONCRETE CHEEK WALL AT STAIR (CFCI)	09/ L5.02	NATURAL GREY/ TOPCAST 05
21	HANDRAIL AT STAIR (CFCI)	11/ L5.02	GALVANIZED
22	HANDRAIL AT RAMP (CFCI)	12/ L5.02	GALVANIZED
23	COBBLESTONE FLUSH CURB AT SAND (OFCI)	20/ L5.01	ANTIQUE COBBLESTONES BY BOURGET BROS
24	TUBE STEEL FENCE (CFCI)	01/ L5.03	AMERISTAR, BLACK/ POWDERCOAT
25	TUBE STEEL PEDESTRIAN SINGLE SWING GATE (CFCI)	02/ L5.03	AMERISTAR, BLACK/ POWDERCOAT
26	TUBE STEEL VEHICULAR GATE (CFCI)	03/ L5.03	AMERISTAR, BLACK/ POWDERCOAT
27	WOODEN BRIDGE (OFCI)	09/ L5.04	CEDAR REDWOOD
28	BOULDER TERRACED WALL (OFCI)	02/ L5.04	REFER TO BOULDER LEGEND ON L0.01
29	PLAY STRIPING (CFCI)	- -	REFER TO STRIPING SHEET ON LS.06
30	PLAY EQUIPMENT	- -	REFER TO PLAYGROUND EQUIP. LEGEND IN L0.01
31	SITE LIGHTING (CFCI)	- -	REFER TO SITE LIGHTING LEGEND IN L0.01
32	BOULDER RETAINING WALL (OFCI)	16/ L5.04	REFER TO BOULDER LEGEND ON L0.01
33	CONCRETE FLUSH CURB AT FENCE (CFCI)	08/ L5.01	NATURAL GREY/ MEDIUM BROOM
34	SITE FURNITURE	- -	REFER TO SITE FURNISHINGS LEGEND IN L0.01
35	STONE TURTLE (OFOI)	01/ L5.04	REFER TO BOULDER LEGEND LEGEND IN L0.01
36	BOULDER SNAKE (OFOI)	22/ L5.04	REFER TO BOULDER LEGEND LEGEND IN L0.01
37	DRY CREEK BASIN (OFCI)	17/ L5.05	SQUARE COBBLE: COSTAL BLUFF BY COUGAR STONE ROUND COBBLE: BUFF MEXICAN BEACH BY SOUTHWEST BOULDER
38	DRY CREEK CASCADE (OFCI)	18/ L5.05	BUFF MEXICAN BEACH PEBBLE BY SOUTHWEST BOULDER
39	BOULDER SPIRAL (OFOI)	18/ L5.05	REFER TO BOULDER LEGEND ON L0.01

ATHLETIC FIELD KEYNOTE LEGEND

NOTE	DESCRIPTION	DET/ SHT	COLOR / FINISH
B01	NATURAL TURF SYSTEM	06/ L5.05	REFER TO SPORTS EQUIP. LEGEND ON L0.01
B02	BASKETBALL GOAL	01/ L5.05	REFER TO SPORTS EQUIP. LEGEND ON L0.01
B03	BASKETBALL COURT STRIPING	02/ L5.05	COLOR TBD/ STREETBOND
B04	KICKBALL COURT STRIPING	17/ L5.05	COLOR TBD/ STREETBOND

REFERENCE KEYNOTE LEGEND

NOTE	DESCRIPTION	DET/ SHT	COMMENTS
A	EXISTING PAVING		PROTECT IN PLACE
B	EXISTING CURB		PROTECT IN PLACE
C	EXISTING GUTTER		PROTECT IN PLACE
D	EXISTING WALL		PROTECT IN PLACE
E	EXISTING FENCE/GATE		PROTECT IN PLACE
F	EXISTING UTILITY		PROTECT IN PLACE
G	A.C. PAVING	PER CIVIL	DURASHIELD ON ALL A.C. PAVED SURFACES
H	CURB AND GUTTER	PER CIVIL	
J	CURB RAMP	PER CIVIL	
K	PAVEMENT STRIPING	PER CIVIL	
L	WHEEL STOP	PER CIVIL	
M	ADA SIGNAGE	PER CIVIL	
N	EV CHARGER	PER CIVIL	
P	PV CANOPY	PER OTHER	
Q	PAVILION	PER OTHER	
R	BIOFILTRATION SYSTEM	PER CIVIL	
S	TRENCH DRAIN	PER CIVIL	
T	EXISTING RAILING		PROTECT IN PLACE
U	EXISTING BUILDING COLUMN		PROTECT IN PLACE
W	DRIVEWAY	PER CIVIL	

SITE SYMBOLS LEGEND

SYM.	DESCRIPTION	SYM.	DESCRIPTION	DET.
	DIRECTION OF RAMP; DOWN SLOPE		SAWCUT JOINT	02/ L5.01
+	EXISTING TREE PROTECT IN PLACE		MATCHLINE	
PA	PLANTING AREA		PROPERTY LINE/ RIGHT OF WAY	

NOTE: UTILITIES SHOWN ARE FOR REFERENCE ONLY. SEE CIVIL AND ELEC DWGS FOR DETAILS AND EXACT LOCATIONS. FINAL LOCATIONS TO BE REVIEWED BY LANDSCAPE ARCHITECT.

LPA
ARCHITECTURE ENGINEERING INTERIOR DESIGN
LANDSCAPE ARCHITECTURE PLANNING
949-261-1001 Office
LPADesignStudios.com
5301 California Avenue, Suite 100
Irvine, California 92617

THE JOBSON FAMILY FOUNDATION

CONCEPT DESIGN:
Landscape Architect
Helle Nebelong
Denmark
hellenebelong.com

This document and all other project documents, ideas, aesthetics and designs incorporated therein are instruments of service. All project documents are copyright protected, are the property of LPA, Inc. (LPA) and cannot be lawfully used in whole or in part for any project or purpose except as set forth in the contractual agreement between LPA and its Client. The unauthorized disclosure and/or use of the project documents (including the creation of derivative works), may give rise to liability for copyright infringement, unlawful disclosure, use or misappropriation of property rights held by LPA. The unauthorized use of the project documents will give rise to the recovery of monetary losses and damages including attorney fees and costs for which the unauthorized user will be held liable.
Project documents describe the design intent of the work and are not a representation of as-built or existing conditions. LPA is not responsible for any discrepancies between the project documents and the existing conditions.

© LPA, Inc.

ALTADENA ARTS MAGNET SCHOOL

743 E CALAVERAS ST.
ALTADENA, CA 91001

Developed for
PASADENA UNIFIED SCHOOL DISTRICT

Revision	Date
Addendum 1	04/28/2026

Submittal	Date
100% SCHEMATIC DESIGN	12/05/2025
DSA SUBMITTAL	02/02/2026
DSA SUBMITTAL 1/2	03/13/2026

Job Number	33366
Checked By	AG /SC
Scale	1" = 10'

SITE MATERIALS ENLARGEMENT PLAN

L3.01

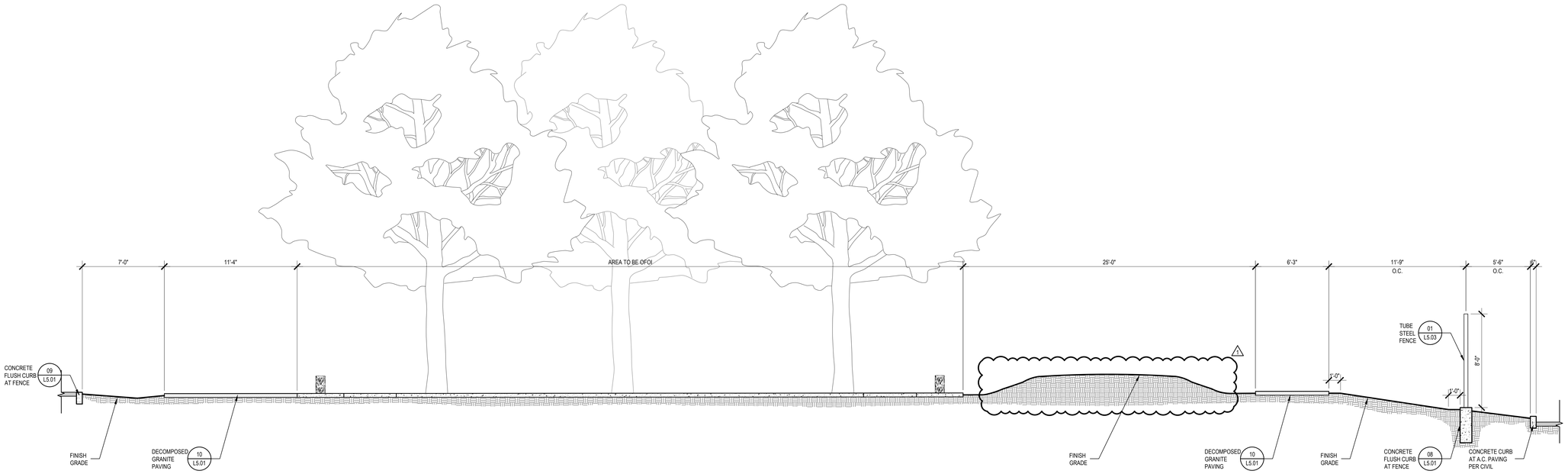

CLEARING MATERIALS SECTION | 1/4" = 1'-0" L3.01 | 03

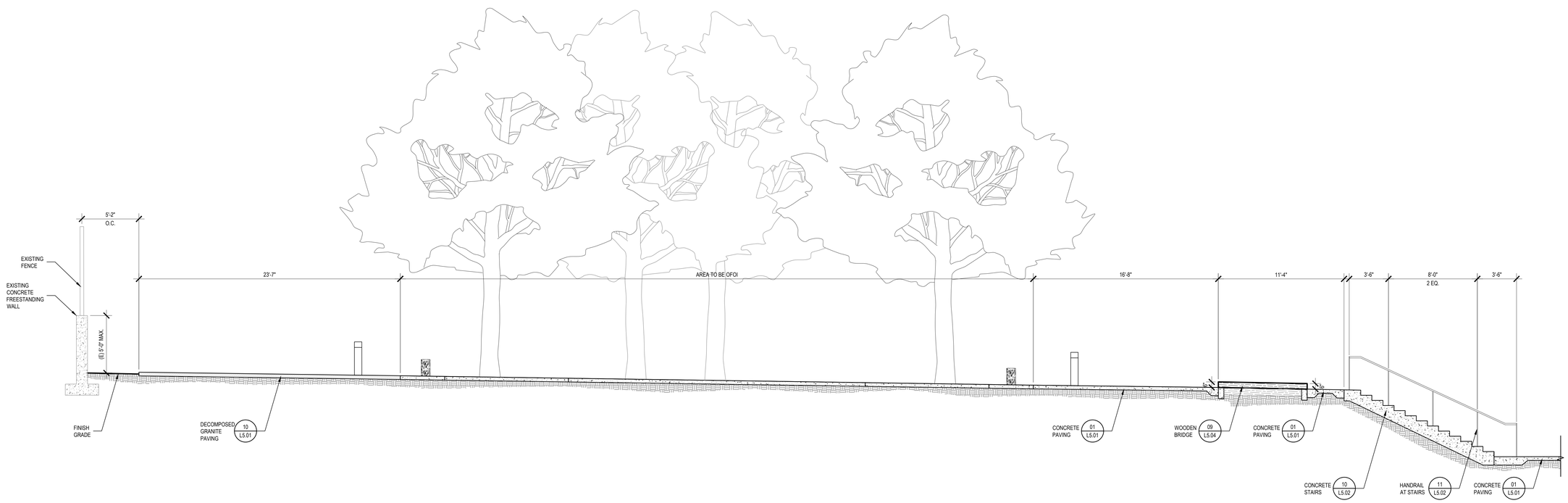

CLEARING MATERIALS SECTION | 1/4" = 1'-0" L3.01 | 01

LPA

ARCHITECTURE ENGINEERING INTERIOR DESIGN
LANDSCAPE ARCHITECTURE PLANNING

949-261-1001 Office

LPADesignStudios.com

5301 California Avenue, Suite 100
Irvine, California 92617

THE JOBSON FAMILY FOUNDATION

CONCEPT DESIGN:

Landscape Architect
Helle Nebelong
Denmark
hellenebelong.com

This document and all other project documents, ideas, aesthetics and designs incorporated therein are instruments of service. All project documents are copyright protected, are the property of LPA, Inc. (LPA) and cannot be lawfully used in whole or in part for any project or purpose except as set forth in the contractual agreement between LPA and its Client. The unauthorized disclosure and/or use of the project documents (including the creation of derivative works), may give rise to liability for copyright infringement, unlawful disclosure, use or misappropriation of property rights held by LPA. The unauthorized use of the project documents will give rise to the recovery of monetary losses and damages including attorney fees and costs for which the unauthorized user will be held liable.
Project documents describe the design intent of the work and are not a representation of as-built or existing conditions. LPA is not responsible for any discrepancies between the project documents and the existing conditions.

© LPA, Inc.

ALTADENA ARTS MAGNET SCHOOL

743 E CALAVERAS ST.
ALTADENA, CA 91001

Developed for
PASADENA UNIFIED SCHOOL DISTRICT

Revision	Date
Addendum 1	04/28/2026

Submittal	Date
100% SCHEMATIC DESIGN	12/05/2025
DSA SUBMITTAL	02/02/2026
DSA SUBMITTAL V2	03/13/2026

Job Number	33366
Checked By	AG /SC
Scale	AS NOTED

SITE SECTIONS AND ELEVATIONS

L4.01

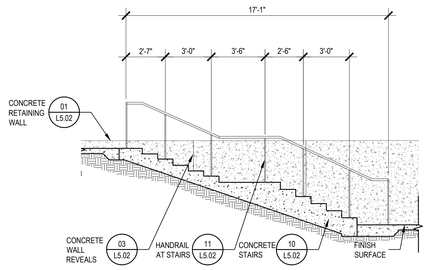

CONCRETE STAIRS + HANDRAIL SECTION | 1/4" = 1'-0" | L1.01 | 12

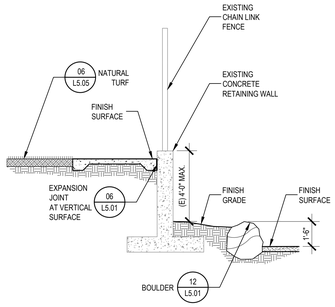

SECTION | 1/4" = 1'-0" | L1.01 | 04

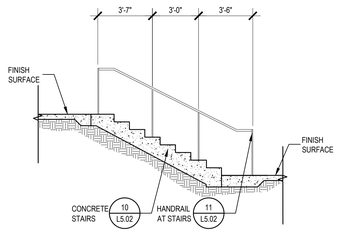

CONCRETE STAIRS + HANDRAIL SECTION | 1/4" = 1'-0" | L3.01 | 11

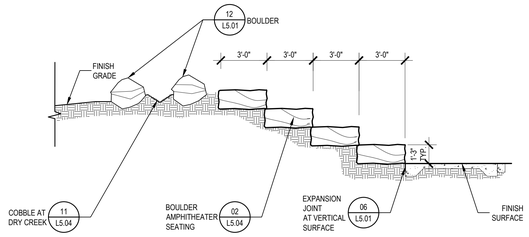

BOULDER AMPHITHEATER SEATING AND DRY CREEK - SECTION | 1/4" = 1'-0" | L3.01 | 03

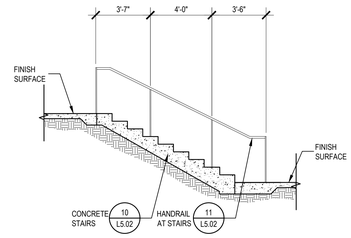

CONCRETE STAIRS + HANDRAIL SECTION | 1/4" = 1'-0" | L3.01 | 10

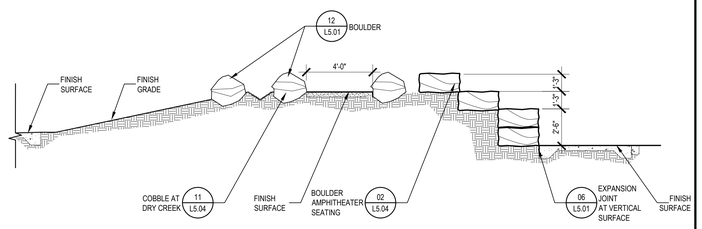

BOULDER AMPHITHEATER SEATING AND DRY CREEK - SECTION | 1/4" = 1'-0" | L3.01 | 02

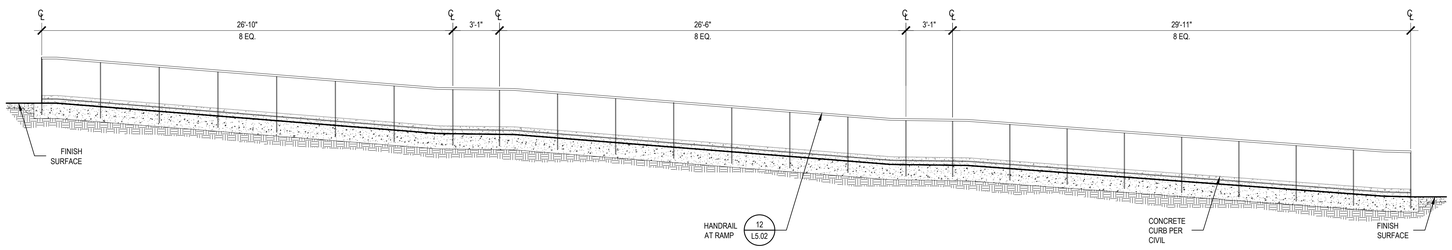

CONCRETE RAMP BY AMPHITHEATER | 1/4" = 1'-0" | L1.01 | 01

LPA
ARCHITECTURE ENGINEERING INTERIOR DESIGN
LANDSCAPE ARCHITECTURE PLANNING
949-261-1001 Office
LPADesignStudios.com
5301 California Avenue, Suite 100
Irvine, California 92617

THE JOBSON FAMILY FOUNDATION

CONCEPT DESIGN:
Landscape Architect
Helle Nebelong
Denmark
hellenebelong.com

This document and all other project documents, ideas, aesthetics and designs incorporated therein are instruments of service. All project documents are copyright protected, are the property of LPA, Inc. (LPA) and cannot be lawfully used in whole or in part for any project or purpose except as set forth in the contractual agreement between LPA and its Client. The unauthorized disclosure and/or use of the project documents (including the creation of derivative works), may give rise to liability for copyright infringement, unlawful disclosure, use or misappropriation of property rights held by LPA. The unauthorized use of the project documents will give rise to the recovery of monetary losses and damages including attorney fees and costs for which the unauthorized user will be held liable.
Project documents describe the design intent of the work and are not a representation of as-built or existing conditions. LPA is not responsible for any discrepancies between the project documents and the existing conditions.

© LPA, Inc.

ALTADENA ARTS MAGNET SCHOOL

743 E CALAVERAS ST.
ALTADENA, CA 91001

Developed for
PASADENA UNIFIED SCHOOL DISTRICT

Revision	Date
Addendum 1	04/28/2026

Submittal	Date
100% SCHEMATIC DESIGN	12/05/2025
DSA SUBMITTAL	02/02/2026
DSA SUBMITTAL V2	03/13/2026

Job Number	33366
Checked By	AG /SC
Scale	AS NOTED

SITE SECTIONS AND ELEVATIONS

L4.02

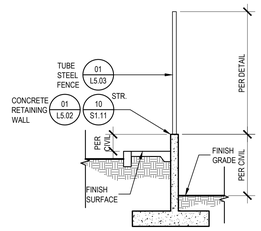

CONCRETE RETAINING WALL SECTION | 1/4" = 1'-0" | L1.01 | 04

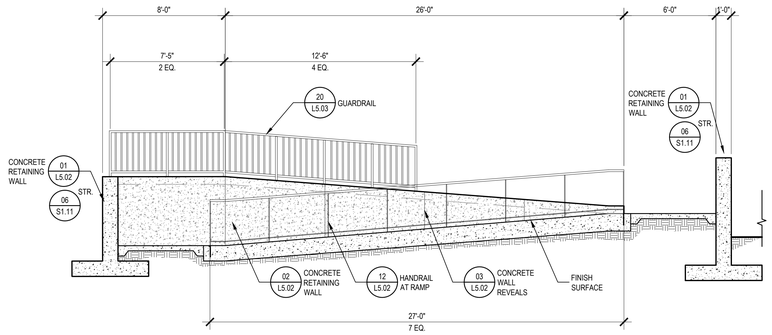

CONCRETE RAMP AND HANDRAIL SECTION AND ELEVATION | 1/4" = 1'-0" | L1.01 | 03

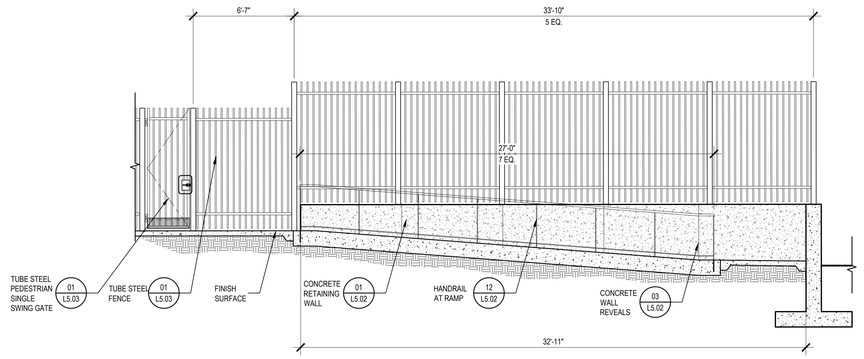

CONCRETE RAMP AND HANDRAIL SECTION AND ELEVATION | 1/4" = 1'-0" | L1.01 | 02

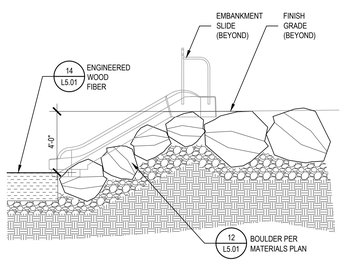

BOULDER AT SLIDE SECTION | 1/4" = 1'-0" | L3.01 | 18

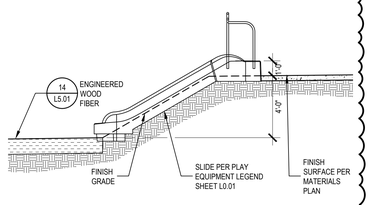

EMBANKMENT SLIDE SECTION | 1/4" = 1'-0" | L3.01 | 14 △1

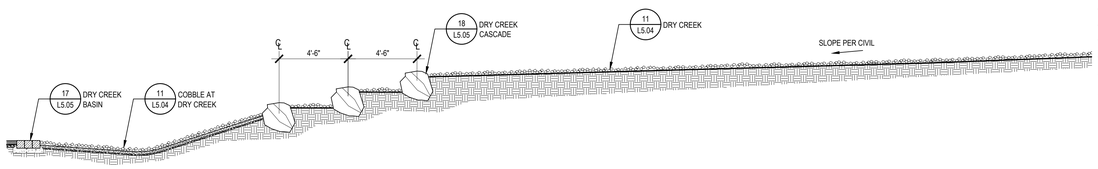

DRY CREEK CASCADE SECTION | 1/4" = 1'-0" | L3.01 | 13

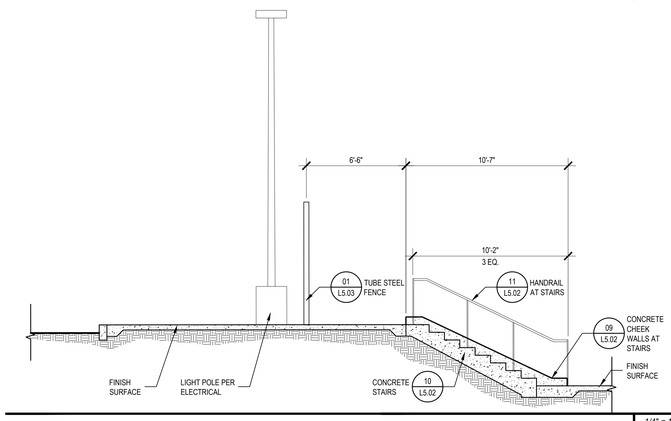

CONCRETE WALK AND STAIRS SECTION | 1/4" = 1'-0" | L1.01 | 01

LPA
ARCHITECTURE ENGINEERING INTERIOR DESIGN
LANDSCAPE ARCHITECTURE PLANNING
949-261-1001 Office
LPADesignStudios.com
5301 California Avenue, Suite 100
Irvine, California 92617

THE JOBSON FAMILY FOUNDATION

CONCEPT DESIGN:
Landscape Architect
Helle Nebelong
Denmark
hellenebelong.com

This document and all other project documents, ideas, aesthetics and designs incorporated therein are instruments of service. All project documents are copyright protected, are the property of LPA, Inc. (LPA) and cannot be lawfully used in whole or in part for any project or purpose except as set forth in the contractual agreement between LPA and its Client. The unauthorized disclosure and/or use of the project documents (including the creation of derivative works), may give rise to liability for copyright infringement, unlawful disclosure, use or misappropriation of property rights held by LPA. The unauthorized use of the project documents will give rise to the recovery of monetary losses and damages including attorney fees and costs for which the unauthorized user will be held liable.
Project documents describe the design intent of the work and are not a representation of as-built or existing conditions. LPA is not responsible for any discrepancies between the project documents and the existing conditions.

© LPA, Inc.

ALTADENA ARTS MAGNET SCHOOL

743 E CALAVERAS ST.
ALTADENA, CA 91001

Developed for
PASADENA UNIFIED SCHOOL DISTRICT

Revision	Date
Addendum 1	04/28/2026

Submittal	Date
100% SCHEMATIC DESIGN	12/05/2025
DSA SUBMITTAL	02/02/2026
DSA SUBMITTAL V2	03/13/2026

Job Number	33366
Checked By	AG /SC
Scale	AS NOTED

SITE SECTIONS AND ELEVATIONS

L4.03

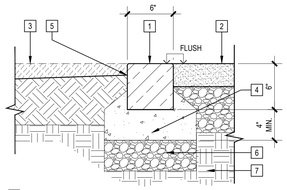

1. 6"X6"X8" COBBLESTONE CURB SET IN MORTAR. REFER TO MATERIAL PLAN FOR COLOR AND FINISH. PROVIDED BY BOURGET BROTHERS.
2. ADJACENT PAVING; SEE MATERIALS PLAN.
3. FINISH GRADE; SEE MATERIALS PLAN FOR MATERIAL.
4. 4" DRY MIX: 1 PART PORTLAND CEMENT, 4 PARTS SAND. WET MORTAR SET.
5. AMENDED TOP SOIL FIN. GRADE ADJACENT TO CONC. BAND:
   FLUSH AT DECOMPOSED GRANITE PAVING
   1-1/2" BELOW CONC. BAND AT PLANTING AREA
   3" BELOW AT ENGINEERED WOOD FIBER
6. AGGREGATE BASE; REFER TO GEOTECH REPORT
7. SUBGRADE; REFER TO GEOTECH REPORT FOR COMPACTION, SCARIFICATION, AND OVER EXCAVATION

NOTES:
A. CONTRACTOR TO PROVIDE FIELD MOCK-UP FOR LANDSCAPE ARCHITECT REVIEW PRIOR TO CONSTRUCTION.
B. EMBED COBBLES APPROXIMATELY 50% THEIR DEPTH INTO DRY MIX

COBBLESTONE FLUSH CURB | 1 1/2"=1'-0" - | 24

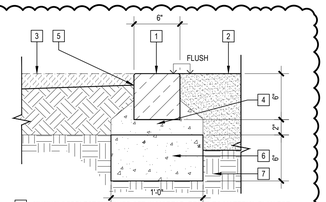

1. 6"X6"X8" COBBLESTONE CURB SET IN MORTAR. REFER TO MATERIAL PLAN FOR COLOR AND FINISH. PROVIDED BY BOURGET BROTHERS.
2. SAND (19 -)
3. FINISH GRADE; SEE MATERIALS PLAN FOR MATERIAL.
4. DRY MIX: 1 PART PORTLAND CEMENT, 4 PARTS SAND. WET MORTAR SET.
5. AMENDED TOP SOIL FIN. GRADE ADJACENT TO CONC. BAND:
   FLUSH AT DECOMPOSED GRANITE PAVING
   1-1/2" BELOW CONC. BAND AT PLANTING AREA
   3" BELOW AT ENGINEERED WOOD FIBER
6. CONCRETE CURB
7. SUBGRADE; REFER TO GEOTECH REPORT FOR COMPACTION, SCARIFICATION, AND OVER EXCAVATION

NOTES:
A. CONTRACTOR TO PROVIDE FIELD MOCK-UP FOR LANDSCAPE ARCHITECT REVIEW PRIOR TO CONSTRUCTION.
B. EMBED COBBLES APPROXIMATELY 50% THEIR DEPTH INTO DRY MIX

COBBLESTONE FLUSH CURB @ SAND | 1 1/2"=1'-0" - | 20

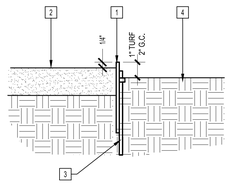

1. ALUMINUM EDGING BY PERMALOC; 8" SIZE
2. STABILIZED DECOMPOSED GRANITE; FINISH GRADE; REFER TO MATERIALS PLAN KEYNOTE LEGEND FOR COLOR
3. 18" STEEL SPIKE AT 18" O.C.
4. PLANTING AREA; FINISH GRADE

NOTE:
A. INSTALL PER MANUFACTURER'S RECOMMENDATIONS.
B. EDGING SHALL BE MILL FINISH TO BE BLACK.

ALUMINUM METAL EDGING | 1 1/2"=1'-0" - | 16

1. BOULDER PER BOULDER LEGEND IN L0.01
2. FINISHED SURFACE, WHERE OCCURS, SEE MATERIALS PLAN
3. FINISHED GRADE AT PLANTING AREA, WHERE OCCURS
4. COMPACTED SUBGRADE PER CIVIL

NOTE:
A. BOULDERS - REFER TO BOULDER LEGEND ON L0.01.
B. PROVISIONS ARE TO BE MADE FOR THE PLACEMENT OF BOULDERS ON SITE USING A METHOD ALLOWING FOR FULL 360 DEGREE ROTATION OF BOULDER IN AIR SUCH AS ARTICULATED KNUCKLE BOOM. NO BACK HOE, DRAGGING OR PUSHING OF BOULDERS WILL BE ACCEPTABLE.
C. BOULDERS SHALL BE POWER WASHED PRIOR TO PLACEMENT.
D. FINAL BOULDER LOCATION TO BE SELECTED BY LANDSCAPE ARCHITECT ON SITE DURING INSTALLATION.
E. BOULDER DIAMETER VARIES. REFER TO TABLE AT LEFT AND MATERIALS PLANS FOR BOULDER TYPES, SIZES, AND LOCATION.
F. NATIVE OR FILL SOIL SUPPORTING EXTERIOR NON-STRUCTURAL FLATWORK AND UNPAVED LANDSCAPING AREAS ARE EXEMPT FROM SPECIAL INSPECTION AND TESTING.

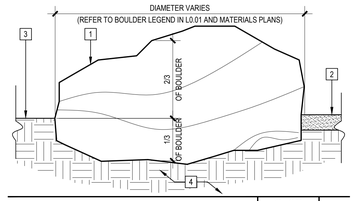

BOULDER SETTING | 1" = 1'-0" - | 12

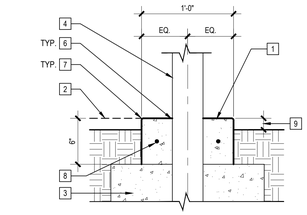

1. FLUSH CONCRETE CURB; REFER TO MATERIALS PLAN FOR FINISH AND COLOR.
2. FINISH GRADE/ FINISH SURFACE; REFER TO MATERIALS PLAN FOR ADJACENT SURFACE MATERIAL
3. FENCE POST FOOTING (13 / L5.03)
4. FENCE POST
5. BASE MATERIAL AND COMPACTED SUBGRADE PER CIVIL DETAILS
6. EXPANSION JOINT AT VERTICAL SURFACE (06 -)
7. 1/4" RADIUS, TYP.
8. (2) #3 REBAR CONTINUOUS
9. 2 1/2" @ SHRUBS/GROUNDCOVER 1" @ TURF

NOTES:
A. PROVIDE EXPANSION JOINT @ ± 20' O.C. W/ TOOLED CONTROL JOINTS AT ± 5' O.C.
B. CONCRETE BATCH PLANT INSPECTION IS NOT REQUIRED.

CONCRETE FLUSH CURB AT FENCE POST | 1 1/2" = 1'-0" - | 08

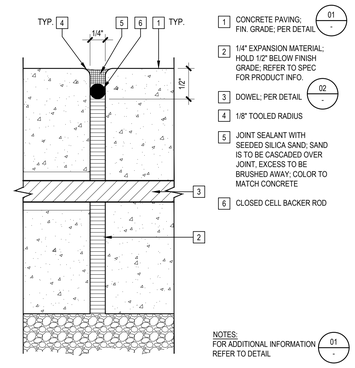

1. CONCRETE PAVING; FIN. GRADE; PER DETAIL (01 -)
2. 1/4" EXPANSION MATERIAL; HOLD 1/2" BELOW FINISH GRADE; REFER TO SPEC FOR PRODUCT INFO.
3. DOWEL; PER DETAIL (02 -)
4. 1/8" TOOLED RADIUS
5. JOINT SEALANT WITH SEEDED SILICA SAND; SAND IS TO BE CASCADED OVER JOINT, EXCESS TO BE BRUSHED AWAY; COLOR TO MATCH CONCRETE
6. CLOSED CELL BACKER ROD

NOTES:
FOR ADDITIONAL INFORMATION REFER TO DETAIL (01 -)

EXPANSION JOINT ENLARGEMENT | N.T.S. - | 04

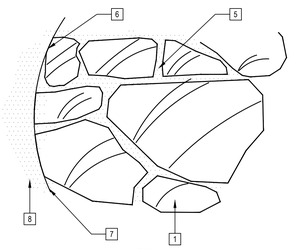

PLAN

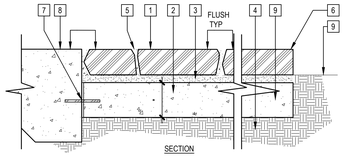

SECTION

1. FLAGSTONE PAVING. MAXIMUM CLEFT OR LEVEL CHANGE OF 1/4" @ JOINTS OR EXPOSED SURFACE. AVERAGE STONE SIZE OF 3' W/NO PIECES SMALLER THAN 1-6" (IN ANY GIVEN DIRECTION). USE SMALL PIECES - 8" MINIMUM ONLY, TO INFILL BETWEEN MAIN PIECES (IN ANY GIVEN DIRECTION). USE STONE PIECES W/SMOOTH TOP AND BOTTOM.
2. CONCRETE BASE WITH REINFORCEMENT PER (01 -)
3. 1"-1.5" MIN. THICK MORTAR SETTING BED (VARIES WITH FLAGSTONE THICKNESS)
4. BASE MATERIAL AND COMPACTED SUBGRADE PER (01 -)
5. FILL JOINTS WITH NON-EXPANDING GROUT, 1/4" JOINT MAX. GROUT COLOR PER SPECIFICATIONS
6. CUT EDGE
7. CONCRETE TIE IN PER (05 -)
8. ADJACENT CONCRETE PAVING WITH THICKENED EDGE PER (10 -)
9. ADJACENT PLANTING AREA (WHERE APPLICABLE, SEE MATERIAL/LAYOUT PLANS)

NOTE:
A. FLAGSTONE PAVING ADJACENT TO VERTICAL SURFACE PER (17 -)

FLAGSTONE PAVING | 1 1/2"=1'-0" - | 22

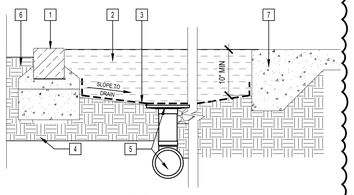

1. COBBLESTONE EDGE PER (20 -)
2. SAND
3. SINGLE LAYER OF MIRAFI 140N FILTER FABRIC SOIL SEPARATOR
4. SUBGRADE
5. AREA DRAIN AND DRAIN PIPE - SEE CIVIL DRAWINGS FOR SIZE AND MATERIAL
6. FINISH GRADE;
7. THICKEN EDGE OF CONCRETE PAVING (05 -)

SAND | 1" = 1'-0" SAME | 19

1. BOULDER PER BOULDER LEGEND IN L0.01
2. FINISHED SURFACE, WHERE OCCURS, SEE MATERIALS PLAN
3. FINISHED GRADE AT PLANTING AREA, WHERE OCCURS
4. COMPACTED SUBGRADE PER CIVIL

NOTE:
A. BOULDERS - REFER TO BOULDER LEGEND ON L0.01.
B. PROVISIONS ARE TO BE MADE FOR THE PLACEMENT OF BOULDERS ON SITE USING A METHOD ALLOWING FOR FULL 360 DEGREE ROTATION OF BOULDER IN AIR SUCH AS ARTICULATED KNUCKLE BOOM. NO BACK HOE, DRAGGING OR PUSHING OF BOULDERS WILL BE ACCEPTABLE.
C. BOULDERS SHALL BE POWER WASHED PRIOR TO PLACEMENT.
D. FINAL BOULDER LOCATION TO BE SELECTED BY LANDSCAPE ARCHITECT ON SITE DURING INSTALLATION. STEPPING STONE TOP SHOULD FLAT.
E. BOULDER DIAMETER VARIES. REFER TO TABLE AT LEFT AND MATERIALS PLANS FOR BOULDER TYPES, SIZES, AND LOCATION.
F. NATIVE OR FILL SOIL SUPPORTING EXTERIOR NON-STRUCTURAL FLATWORK AND UNPAVED LANDSCAPING AREAS ARE EXEMPT FROM SPECIAL INSPECTION AND TESTING.

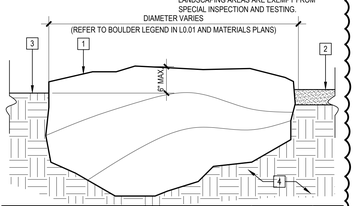

STEPPING STONE | 1" = 1'-0" - | 18

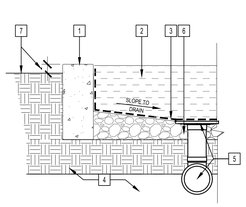

1. CONCRETE HEADER PER (09 -)
2. ENGINEERED WOOD FIBER (EWF) (13 -)
3. SINGLE LAYER OF MIRAFI 140N FILTER FABRIC SOIL SEPARATOR
4. SUBGRADE
5. AREA DRAIN AND DRAIN PIPE - SEE CIVIL DRAWINGS FOR SIZE AND MATERIAL
6. AGGREGATE BASE
7. FINISH GRADE;
   1-1/2" @ SHRUB AND GROUNDCOVER
   FLUSH @ HARDSCAPE

DRAIN AT EWF | 1" = 1'-0" SAME | 15

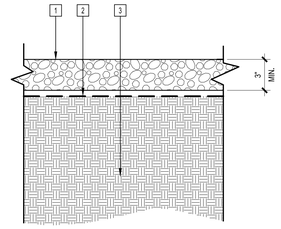

1. MATERIAL & COLOR REFER TO KEYNOTE LEGEND. MATERIAL TO BE WASHED TWICE PRIOR TO PLACING.
2. SOIL SEPARATOR FABRIC "MIRAFI" 140N.
3. BASE MATERIAL AND COMPACTED SUBGRADE PER (01 -)

NOTE:
A. FOR ALUMINUM METAL EDGING, REFER TO (23 -)
B. INSTALL AT EDGES WHERE OCCURS AT PERIMETER PER MATERIALS PLAN

ROCK MULCH | 3" = 1'-0" - | 11

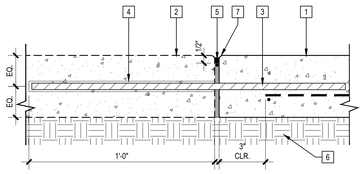

1. NEW CONCRETE PAVING AND REINFORCEMENT; REFER TO DTL. (01 / C7.01)
2. EXISTING CONCRETE PAVING
3. 1/2" X 24" SMOOTH STEEL DOWEL AT 18" O.C.
4. 5/8" SLIP SLEEVE DRILLED INTO EXISTING CONCRETE PAVING; DOWEL TO HAVE FREE MOVEMENT ON THIS SIDE
5. JOINT SEALANT WITH BACKER ROD
6. BASE MATERIAL AND COMPACTED SUBGRADE; REFER TO DTL. (01 / C7.01)
7. 1/8" RADIUS; AT NEW CONCRETE PAVING

NOTES:
A. PROVIDE AT ALL LOCATIONS WHERE NEW CONCRETE JOINS EXISTING CONCRETE.
B. PROVIDE CLEAN SAWCUT AT EXISTING PAVING. EXTEND PROPOSED PAVING AS REQUIRED TO CLOSEST ADJACENT JOINT.
C. SEE CIVIL PLANS FOR LIMIT OF DEMOLITION.
D. NATIVE OR FILL SOIL SUPPORTING EXTERIOR NON-STRUCTURAL FLATWORK AND UNPAVED LANDSCAPING AREAS ARE EXEMPT FROM SPECIAL INSPECTION AND TESTING.
E. CONCRETE BATCH PLANT INSPECTION IS NOT REQUIRED.

CONCRETE PAVING TIE-IN | 3"=1'-0" - | 07

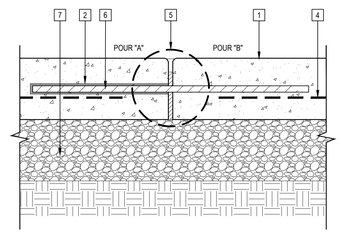

A. SAWCUT CONTROL JOINT

B. EXPANSION JOINT

1. CONCRETE PAVING; REFER TO DETAIL (01 -)
2. SPEED DOWEL; BY SIKA CORPORATION CONCRETE ACCESSORIES; PRODUCT # PSD12/ #4TX
3. SAWCUT CONTROL JOINT; 1/8-INCH WIDE; CUT TO 1/4 DEPTH OF SLAB; PROVIDE TIGHT 1/8-INCH RADIUS ON EDGE OF PAVING BEFORE SAWCUTTING.
4. CONCRETE PAVING REINFORCEMENT; REFER TO DETAIL (01 / C7.01)
5. JOINT ENLARGEMENT; REFER TO DETAIL (04 -)
6. PEDESTRIAN: 3'Ø SMOOTH STEEL DOWEL; 18" @ 18" O.C.
   PEDESTRIAN: 3'Ø SMOOTH STEEL DOWEL; 18" @ 18" O.C.
7. AGGREGATE BASE AND SUBGRADE; REFER TO PAVING DETAIL (01 / C7.01)

NOTES:
A. NATIVE OR FILL SOIL SUPPORTING EXTERIOR NON-STRUCTURAL FLATWORK AND UNPAVED LANDSCAPING AREAS ARE EXEMPT FROM SPECIAL INSPECTION AND TESTING.
B. CONCRETE BATCH PLANT INSPECTION IS NOT REQUIRED.

CONCRETE PAVING JOINTS | 3" = 1'-0" - | 02

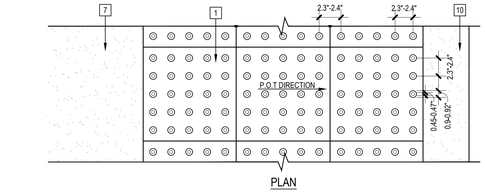

PLAN

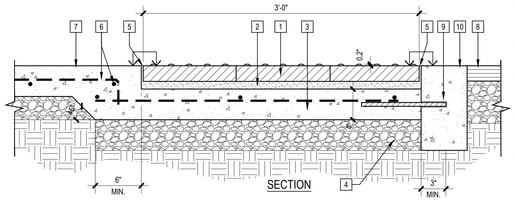

SECTION

1. PRE-CAST TRUNCATED DOME TILES. MODEL NO. ADA-2 FROM WAUSAU TILE. COLOR TO BE FEDERAL YELLOW (33538) OF SAE AMSSTD-595A. SHALL COMPLY WITH CBC 11B-247, 11B-250, 11B-705
2. MORTAR SETTING BED PER MANUF.
3. CONCRETE PAVING PER (01 -)
4. BASE MATERIAL & COMPACTED SUBGRADE SEE CIVIL (01 / C7.01)
5. EXPANSION JOINT PER (02 -)
6. #4 REBAR AT 18" O.C. EACH WAY
7. FINISH SURFACE; REFER TO MATERIALS PLAN
8. ADJACENT PAVING; REFER TO MATERIALS PLAN
9. DRILLED 5/8" DIA. SLIP SLEEVE AT CONCRETE FLUSH BAND; DOWEL TO HAVE FREE MOVEMENT AT THIS SIDE.
10. FLUSH CONCRETE CURB; PER CIVIL DWG'S.

NOTE:
A. TOTAL LENGTH OF TRUNCATED DOME TILES PER PLAN.
B. TRUNCATED DOME TILES ARE TO CONFORM TO STATE ACCESSIBILITY STANDARDS. CONTRACTOR TO VERIFY STANDARDS PRIOR TO INSTALLATION.
C. DETECTABLE WARNING SURFACES SHALL CONTRAST VISUALLY WITH ADJACENT WALKING SURFACE. EITHER LIGHT ON DARK OR DARK ON LIGHT.

PRECAST TRUNCATED DOME PAVERS - MORTAR SET | 1 1/2" = 1'-0" - | 17

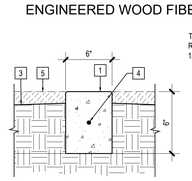

FLUSH CURB WITH PLANTING ON BOTH SIDES

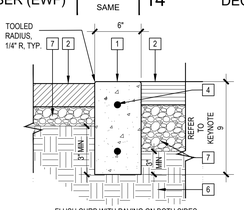

FLUSH CURB WITH PAVING ON BOTH SIDES

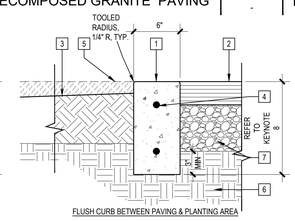

FLUSH CURB BETWEEN PAVING & PLANTING AREA

1. CONCRETE FLUSH CURB; REFER TO MATERIALS PLAN FOR FINISH.
2. FINISH SURFACE. SEE MATEIRAL PLAN FOR MATERIAL
   a. FLUSH AT ASPHALT AND CONCRETE
   b. 1/4" MAX BELOW CONC. BAND AT DECOMPOSED GRANITE PAVING
   c. 1/4" MAX BELOW AT ENGINEERED WOOD FIBER
3. FINISH GRADING
4. (2) #4 CONTINUOUS HORIZONTAL REBAR.
5. TOP OF TURF MULCH / SAND / COBBLE / TURF
   a. 1" BELOW CONC. BAND AT TURF
   b. 1-1/2" BELOW CONC. BAND AT MULCH/SAND/COBBLE
6. COMPACTED SUBGRADE; REFER TO CIVIL DWG'S.
7. AGGREGATED BASE
8. a. ASPHALT & PLANTING AREA (PA): 12" MIN
   b. ENGINEERING WOOD FIBER (EWF) & PA: 18"
   c. DG & PA: 9" MIN
   d. DG & COBBLE / PA: 9" MIN
9. a. ASPHALT & DG: 12" MIN
   b. ASPHALT & EWF: 18" MIN
   c. EWF & DG: 18"

NOTES:
A. PROVIDE TOOLED JOINT EVERY 10'-0" OR TO ALIGN WITH PAVING JOINTS & EXPANSION JOINT EVERY 30' & AT EVERY CHANGE IN DIRECTION
B. ENGINEERING WOOD FIBER (14 -)
C. DECOMPOSED GRANITE (10 -)
D. COBBLE / SAND (11 -)

ENGINEERED WOOD FIBER (EWF) | 1-1/2" = 1'-0" SAME | 14

DECOMPOSED GRANITE PAVING | 3" = 1'-0" - | 10

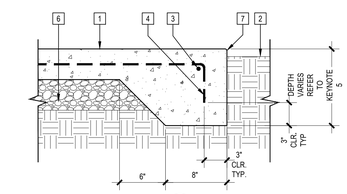

1. CONCRETE PAVING; REFER TO DTL. (01 -)
2. ADJACENT SURFACE/ FINISH GRADE; REFER TO PER MATERIALS PLAN
3. #X REINFORCING; CONTINUOUS
4. EXTEND REINFORCEMENT FROM PAVING INTO THICKENED EDGE & WRAP ENDS
5. THICKENED EDGE; 6" DEPTH FOR PEDESTRIAN PAVING; 7" DEPTH FOR VEHICULAR PAVING
6. BASE MATERIAL & COMPACTED SUBGRADE; REFER TO DTL. (01 / C7.01)
7. EASE ALL EDGES; 1/4"R, TYP.

NOTE:
FOR EDGE CONDITION ADJACENT TO VERTICAL SURFACE REFER TO DTL. (06 -)

CONC. PAVING THICKENED EDGE | 1 1/2" = 1'-0" - | 05

EXPANSION JOINT AT VERTICAL SURFACE | 3" = 1'-0" - | 06

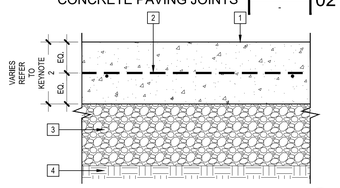

1. CONCRETE PAVING; REFER TO MATERIALS PLAN KEYNOTE LEGEND FOR FINISH & COLOR.
2. FOR PAVING THICKNESS & REINFORCEMENT SEE CIVIL (01 / C7.01)
3. AGGREGATE BASE SEE CIVIL (01 / C7.01)
4. SUBGRADE COMPACTION & OVER EXCAVATION SEE CIVIL (01 / C7.01)

NOTES:
A. SAWCUT & EXPANSION JOINTS; REFER TO DETAIL. (02 -)
B. PROVIDE DOWELS WHERE NEW CONCRETE TIES INTO EXISTING PER DETAIL. (07 -)
C. PROVIDE THICKENED EDGE AT COLUMNS, SITE AND BLDG. WALLS, AND WHERE PAVING IS ADJACENT TO PLANTING AREAS. (05 -)
D. EXP. JOINT AT CURB PER DETAIL (02 -)
E. DO NOT ALLOW CONCRETE OVER-POUR INTO ADJACENT PLANTING AREA.
F. NATIVE OR FILL SOIL SUPPORTING EXTERIOR NON-STRUCTURAL FLATWORK AND UNPAVED LANDSCAPING AREAS ARE EXEMPT FROM SPECIAL INSPECTION AND TESTING. (02 -)
G. CONCRETE BATCH PLANT INSPECTION IS NOT REQUIRED.

CONCRETE PAVING | 3" = 1'-0" - | 01

CONC. FLUSH CURB | 1 1/2"=1'-0" - | 09

LPA
ARCHITECTURE ENGINEERING INTERIOR DESIGN
LANDSCAPE ARCHITECTURE PLANNING
949-261-1001 Office
LPADesignStudios.com
5301 California Avenue, Suite 100
Irvine, California 92617

THE JOBSON FAMILY FOUNDATION

CONCEPT DESIGN:
Landscape Architect
Helle Nebelong
Denmark
hellenebelong.com

This document and all other project documents, ideas, aesthetics and designs incorporated therein are instruments of service. All project documents are copyright protected, are the property of LPA, Inc. (LPA) and cannot be lawfully used in whole or in part for any project or purpose except as set forth in the contractual agreement between LPA and its Client. The unauthorized disclosure and/or use of the project documents (including the creation of derivative works), may give rise to liability for copyright infringement, unlawful disclosure, use or misappropriation of property rights held by LPA. The unauthorized use of the project documents will give rise to the recovery of monetary losses and damages including attorney fees and costs for which the unauthorized user will be held liable.
Project documents describe the design intent of the work and are not a representation of as-built or existing conditions. LPA is not responsible for any discrepancies between the project documents and the existing conditions.

© LPA, Inc.

ALTADENA ARTS MAGNET SCHOOL

743 E CALAVERAS ST.
ALTADENA, CA 91001

Developed for
PASADENA UNIFIED SCHOOL DISTRICT

Revision	Date
Addendum 1	04/28/2026

Submittal	Date
100% SCHEMATIC DESIGN	12/05/2025
DSA SUBMITTAL	02/02/2026
DSA SUBMITTAL V2	03/13/2026

Job Number	33366
Checked By	AG /SC
Scale	AS NOTED

CONSTRUCTION DETAILS

L5.01

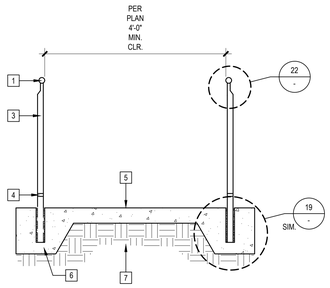

SECTION A

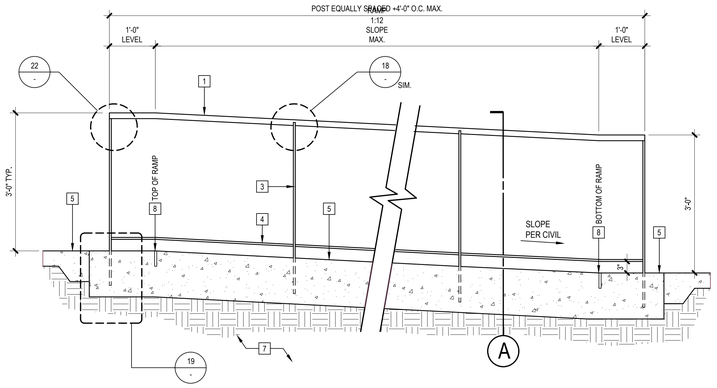

1. 1.66" O.D. SCH. 40 STEEL PIPE.
2. NOT USED
3. 1-1/2" x 3/4" THICK SOLID STOCK STEEL POST.
4. 1-1/2" x 3/4" THICK SOLID STOCK STEEL BOTTOM RAIL.
5. CONCRETE PAVING; FINISH GRADE
6. POST EMBEDMENT IN CONCRETE THICKENED EDGE (19 -)
7. BASE MATERIAL AND COMPACTED SUBGRADE PER GEOTECHNICAL REPORT.
8. TOP OF RAMP/BOTTOM OF RAMP

NOTES:

A. ALL COMPONENTS ARE TO BE GALVANIZED STEEL, SEE SPECS.
B. GRIND ALL WELDS SMOOTH.
C. 1/8" EDGES TYPICAL ALL CORNERS.
D. COLD GALVANIZED ALL FIELD WELDS.
E. ALL HANDRAILS TO BE 4" MIN. FROM ADJACENT VERTICAL SURFACE UNLESS OTHERWISE NOTED ON PLAN. THIS DIM. WILL VARY BASED ON THE PROJECT DESIGN
F. PROVIDE HANDRAILS ON BOTH SIDES OF RAMP, TYPICAL

RAMP HANDRAIL | 3/4"=1'-0" - | 12

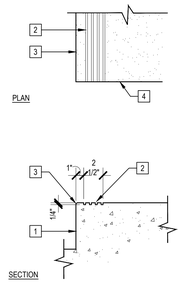

1. CONCRETE STAIRS; PER DETAIL (10 -)
2. TROWELED GROOVES; APPLY CONTRASTING CONCRETE STAIN WITHIN ENTIRE WIDTH AND LENGTH OF GROOVED AREA.
3. 1/2" RADIUS AT TREAD NOSE
4. EDGE OF STAIRS

NOTES:

A. GROOVES REQUIRED AT EACH TREAD OF ALL EXTERIOR STAIRS.
B. CONCRETE STAIN COLOR = BLACK; APPLY 2-COATS.

STAIR NOSING | 1 1/2"=1'-0" - | 08

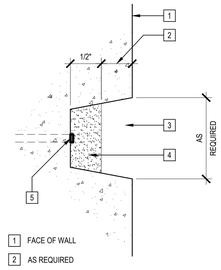

1. FACE OF WALL
2. AS REQUIRED
3. VOID FROM SNAP TIE CONE
4. QUICK SET HYDRAULIC NON-SHRINK CEMENT
5. SNAP TIE - CUT FLUSH WITH BACK OF CONE VOID

NOTES:

A. ALL SNAP TIES TO BE ALIGNED VERTICALLY AND HORIZONTALLY ALONG THEIR CENTERLINES.
B. CONTRACTOR TO SUBMIT SHOP DRAWINGS OF SNAP TIE LAYOUT TO LANDSCAPE ARCHITECT PRIOR TO CONSTRUCTION.

INFILL AT WALL SNAP TIE VOID | FULL - | 04

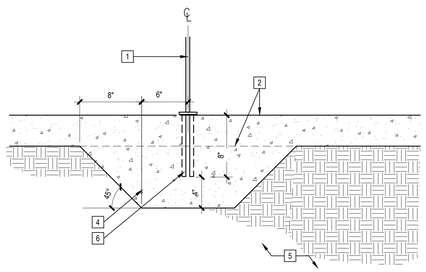

1. STEEL POST
2. CONCRETE PAVING
3. NOT USED
4. CONCRETE FOOTING
5. COMPACT PER GEOTECH REPORT
6. CAST IN PLACE, CORE DRILL, OR PROVIDE SLEEVE. SET POSTS W/NON SHRINK GROUT. IF CORE DRILL IS PROVIDED FINAL SECTION IS TO MATCH FOOTING DIMENSION. CORE DRILL OR SLEEVE TO BE SMALLER THAN COVER PLATE. (2) SMALL OVERLAPING CORE HOLES MAY BE REQUIRED

NOTES:

A. ALL COMPONENTS ARE TO BE HOT DIPPED GALVANIZED STEEL, REFER TO SPEC.

STAIR HANDRAIL END POST EMBEDMENT | 1 1/2" = 1'-0" - | 19

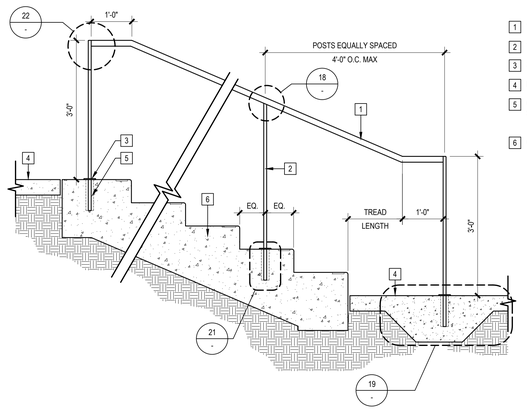

1. 1.66" O.D. SCH 40 STEEL PIPE.
2. 1-1/2" x 3/4" THICK SOLID STOCK STEEL POST.
3. 3" DIA. X 1/4" THICK BASE PLATE (19 / L5.03)
4. FINISH SURFACE
5. CAST IN PLACE, CORE DRILL, OR PROVIDE KNOCKOUT. SET POSTS W/ NON SHRINK GROUT.
6. C.I.P. CONCRETE STAIRS. PER xxx

NOTES:

A. ALL COMPONENTS ARE TO BE SCHEDULE 40 GALV. STEEL, SEE DIV.05 SPEC.
B. GRIND ALL WELDS SMOOTH.
C. 1/8" EDGES TYPICAL ALL CORNERS.
D. COLD GALVANIZED ALL FIELD WELDS.
E. ALL HANDRAILS TO BE 4" CLEAR MIN. FROM VERTICAL SURFACE.

STAIR HANDRAIL | 3/4"=1'-0" - | 11

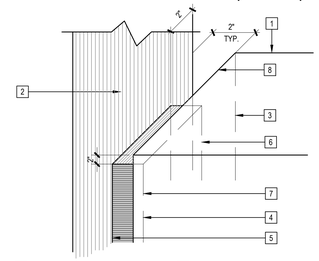

1. CONCRETE WALL; REFER TO MATERIAL PLAN FOR FINISH AND COLOR
2. ADJOINING WALL, BUILDING OR OTHER VERTICAL SURFACE
3. BACK EDGE OF WALL
4. 2" X 2" REVEAL. FINISH ALL EXPOSED EDGES TO MATCH FACE OF WALL
5. COLD JOINT
6. BACK EDGE OF REVEAL. REVEAL TO BE CONTINUOUS ON ALL SIDES OF WALL UNLESS OTHERWISE INDICATED ON PLAN OR ELEVATIONS
7. INSIDE EDGE OF REVEAL
8. EDGE PER (03 -)

REVEAL AT END OF CONC. WALL | 3" = 1'-0" - | 07

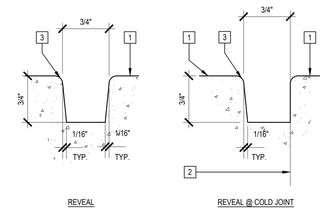

REVEAL | REVEAL @ COLD JOINT

1. CONCRETE WALL PER MATERIALS PLAN.
2. COLD JOINT.
3. 1/8" TOOLED/STONED CORNERS & EDGES.

NOTES:

A. PROVIDE REVEAL @ ALL COLD JOINTS.
B. REVEAL SHOULD BE CONTINUOUS ON SIDES & TOP OF WALL, UNLESS OTHERWISE NOTED ON PLAN OR ELEVATION.
C. REFER TO PLANS & ELEVATIONS FOR JOINT SIZE & LOCATION.
D. ALIGN ALL FORM JOINTS W/REVEALS. CUSTOM CUT FORMS AS REQUIRED.

CONCRETE WALL REVEALS | FULL / SAME | 03

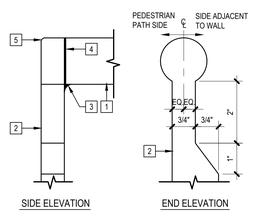

SIDE ELEVATION | END ELEVATION

1. 1.66" O.D. SCH. 40 STEEL PIPE
2. 1-1/2" X 3/4" THICK SOLID STOCK STEEL POST.
3. CONTINUOUS FILLET WELD
4. WELD ALL AROUND, GRIND SMOOTH.
5. 1/8" MIN. RADIUS, TYP.

HANDRAIL END CONNECTION-D1 | 6" = 1'-0" - | 22

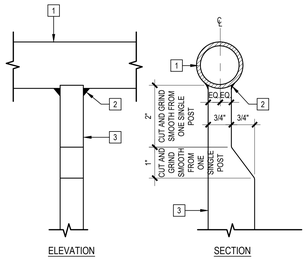

ELEVATION | SECTION

1. 1.660" O.D. SCH. 40 STEEL PIPE.
2. CONTINUOUS 1/4" FILLET WELD BOTTOM SIDE ONLY.
3. 1-1/2" x 3/4" THICK SOLID STOCK STEEL 'SINGLE' POST. (WELDING OF POSTS TOGETHER SHALL NOT BE ACCEPTABLE)

HANDRAIL MID CONNECTION-D1 | 6"=1'-0" - | 18

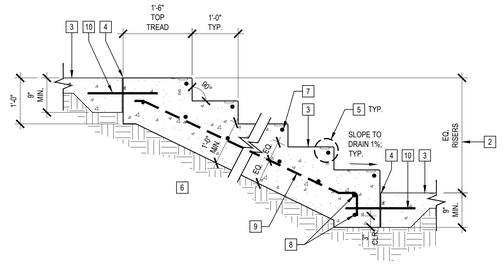

1. CAST-IN-PLACE CONCRETE STAIRS PER MATERIALS AND LAYOUT PLAN
2. RISER HEIGHT PER CIVIL GRADING PLAN; 4" MIN - 7" MAX.
3. CONCRETE PAVING; PER MATERIALS PLAN; FINISH GRADE
4. EXPANSION JOINT; PER DETAIL (02 / L5.01)
5. STAIR NOSING; PER DETAIL (08 -)
6. BASE MATERIAL AND SUBGRADE; PER CIVIL DETAIL (01 / L5.01)
7. #4 NOSING BAR W/STANDARD BAND EACH END; PROVIDE 1-1/2" CONCRETE COVERAGE; TYP.
8. (2) # 4 REBAR CONT.
9. #4 REBAR AT 12" O.C. EA. WAY
10. 1/2" X 18" LONG SMOOTH STEEL DOWEL, 18" O.C.

NOTE:

A. FOR CAST-IN-PLACE CONC. CHEEK WALLS; REFER TO DETAIL. (09 -)
B. STAIRS TO HAVE HANDRAILS ON BOTH SIDES OF STAIRS; REFER TO DETAIL. (11 -)

CONCRETE STAIRS | 3/4" = 1'-0" - | 10

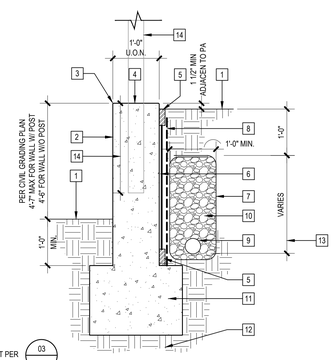

NOTES:

A. REVEAL/COLD JOINT PER (03 -)
B. REFER TO PLANS/ELEVATIONS FOR LOCATION OF JOINTS.
C. ALL FORM SEAMS ARE TO ALIGN WITH REVEALS SHOWN ON ELEVATIONS & PLANS. PROVIDE CUSTOM FORM BOARDS AS REQUIRED.
D. INFILL @ SNAP TIE PER (04 -)

1. FINISH SURFACE/FINISH GRADE; REFER TO MATERIALS PLAN
2. CONCRETE WALL; REFER TO MATERIALS PLAN KEYNOTE LEGEND FOR COLOR & FINISH
3. 1/4" EASED EDGE RADIUS, TYP. ALL EDGES. NO CHAMFERS
4. TOP OF WALL PER CIVIL GRADING PLAN. HOLD DATUM LINE.
5. MASTIC SEAL @ BITUTHENE MEMBRANE TERMINATIONS
6. BITUTHENE MEMBRANE
7. 'MIRAFI' 140N FILTER FABRIC
8. PROTECTION BOARD, OVER 'BITUTHENE' MEMBRANE OVER PRIMED WALL
9. 4" PERFORATED DRAINLINE INSTALLED W/PERFORATION DOWN.REFER TO CIVIL PLAN WHERE OCCURS. 1% MIN. GRADIENT FLOW TO END OF WALL. CONNECT TO CLOSEST CIVIL STORM DRAIN LINE PER CIVIL UTILITY PLAN
10. 3/4" DRAIN ROCK
11. STEEL REINFORCEMENT & FOOTING DIMENSIONS - WALL - WALL W/ FENCE OR GUARDRAIL (06 / S1.11) (10 / S1.11)
12. SUBGRADE OVER-EXCAVATION AND COMPACTION IS PER GEOTECHNICAL REPORT
13. 1'-6" MIN. OR 1/3 WALL HEIGHT, WHICHEVER IS GREATER. PROVIDE MIN. 1" SOIL OVER GRAVEL
14. POST EMBEDMENT WHERE OCCURS - 8' FENCE : 18" - GUARDRAIL: 9"

CONCRETE RETAINING WALL | 3/4" = 1'-0" - | 01

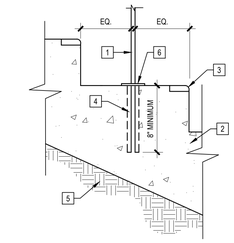

1. HANDRAIL POST, SEE (11 -)
2. CONCRETE STAIRS, SEE CIVIL.
3. STAIR NOSING, SEE (08 -)
4. C.I.P. CORE DRILL OR PROVIDE KNOCK-OUT. SET POSTS WITH NON-SHRINK GROUT.
5. BASE MATERIAL AND COMPACTED SUBGRADE PER GEOTECHNICAL REPORT.
5. BASE PLATE, SEE (11 -)

STAIR HANDRAIL EMBEDMENT | 1-1/2" = 1'-0" - | 21

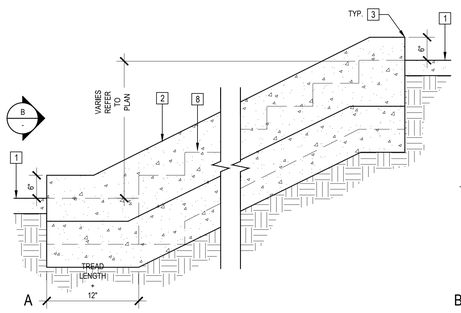

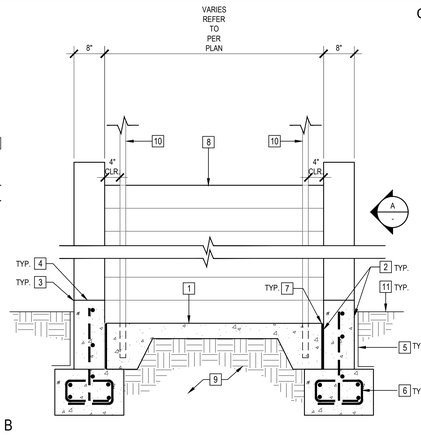

NOTE:

A. NOT PART OF DSA APPROVAL- DSA SS NOT REQUIRED PER IR A-22

CONCRETE CHEEK WALLS AT STAIRS | 3/4" = 1'-0" - | 09

LPA

ARCHITECTURE ENGINEERING INTERIOR DESIGN
LANDSCAPE ARCHITECTURE PLANNING

949-261-1001 Office

LPADesignStudios.com

5301 California Avenue, Suite 100
Irvine, California 92617

THE JOBSON FAMILY FOUNDATION

CONCEPT DESIGN:
Landscape Architect
Helle Nebelong
Denmark
hellenebelong.com

This document and all other project documents, ideas, aesthetics and designs incorporated therein are instruments of service. All project documents are copyright protected, are the property of LPA, Inc. (LPA) and cannot be lawfully used in whole or in part for any project or purpose except as set forth in the contractual agreement between LPA and its Client. The unauthorized disclosure and/or use of the project documents (including the creation of derivative works), may give rise to liability for copyright infringement, unlawful disclosure, use or misappropriation of property rights held by LPA. The unauthorized use of the project documents will give rise to the recovery of monetary losses and damages including attorney fees and costs for which the unauthorized user will be held liable.
Project documents describe the design intent of the work and are not a representation of as-built or existing conditions. LPA is not responsible for any discrepancies between the project documents and the existing conditions.

© LPA, Inc.

ALTADENA ARTS MAGNET SCHOOL

743 E CALAVERAS ST.
ALTADENA, CA 91001

Developed for
PASADENA UNIFIED SCHOOL DISTRICT

Revision	Date
Addendum 1	04/28/2026

Submittal	Date
100% SCHEMATIC DESIGN	12/05/2025
DSA SUBMITTAL	02/02/2026
DSA SUBMITTAL V2	03/13/2026

Job Number	33366
Checked By	AG /SC
Scale	AS NOTED

CONSTRUCTION DETAILS

L5.02

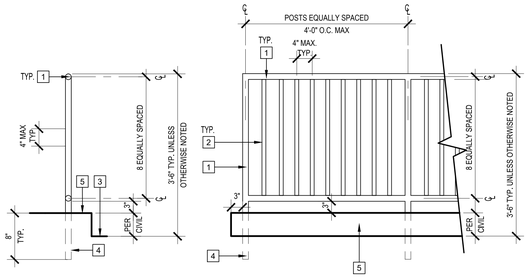

1 1.90" O.D. SCH 40 STEEL PIPE

2 1.05" O.D. SCH 40 STEEL PIPE

3 ADJACENT SURFACE PER MATERIALS PLAN

4 CORE DRILL 2" LARGER THAN POST DIAMETER FOR ROUND POSTS OR 2" WIDER THAN DIMENSION FOR SQUARE POSTS. SET POSTS W/NON SHRINK GROUT PER STRUCTURAL GENERAL NOTE F.8.

5 CONCRETE CURB PER CIVIL PLANS

NOTES:
A. ALL COMPONENTS ARE TO BE HOT DIPPED GALVANIZED STEEL, SEE SPEC.
B. GRIND ALL WELDS SMOOTH.
C. 1/8" EDGES TYPICAL ALL CORNERS.
D. COLD GALVANIZE ALL FIELD WELDS.

GUARDRAIL | 3/4" = 1'-0" | 20

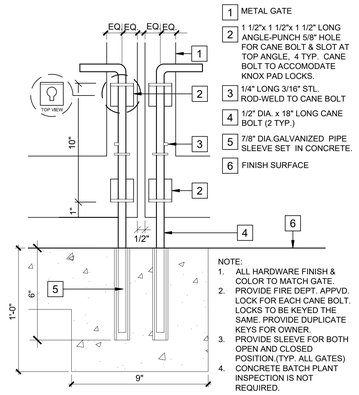

1 METAL GATE

2 1 1/2"x 1 1/2"x 1 1/2" LONG ANGLE-PUNCH 5/8" HOLE FOR CANE BOLT & SLOT AT TOP ANGLE. 4 TYP. CANE BOLT TO ACCOMODATE KNOX PAD LOCKS.

3 1/4" LONG 3/16" STL. ROD-WELD TO CANE BOLT

4 1/2" DIA x 18" LONG CANE BOLT (2 TYP.)

5 7/8" DIA.GALVANIZED PIPE SLEEVE SET IN CONCRETE.

6 FINISH SURFACE

NOTE:
1. ALL HARDWARE FINISH & COLOR TO MATCH GATE.
2. PROVIDE FIRE DEPT. APPV'D. LOCK FOR EACH CANE BOLT. LOCKS TO BE KEYED THE SAME. PROVIDE DUPLICATE KEY'S FOR OWNER.
3. PROVIDE SLEEVE FOR BOTH OPEN AND CLOSED POSITION.(TYP. ALL GATES)
4. CONCRETE BATCH PLANT INSPECTION IS NOT REQUIRED.

CANE BOLT | 3" = 1'-0" | 16

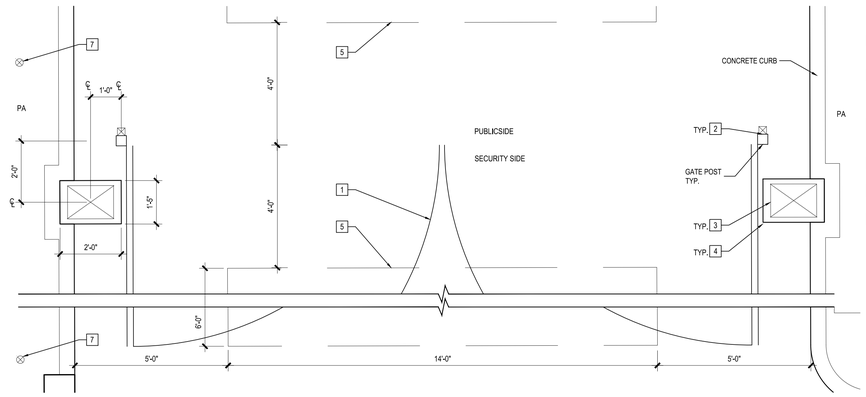

1 AUTOMATIC VEHICULAR SWING GATE (03 / -)

2 POST-MOUNT PHOTOEYE SENSOR. IRB-M/ON BY EMX PART # MX3990 BY HYSECURITY

3 GATE OPERATOR, SWINGSMART535 BY HYSECURITY

4 CONCRETE PAD AT GATE OPERATOR (15 / -)

5 IN-GRADE VEHICULAR LOOP DETECTOR

6 POST FOR RFID READER (21 / -)

TUBE STEEL AUTOMATIC VEHICULAR SWING GATE - ENLARGED PLAN | 1/2"=1'-0" | 04

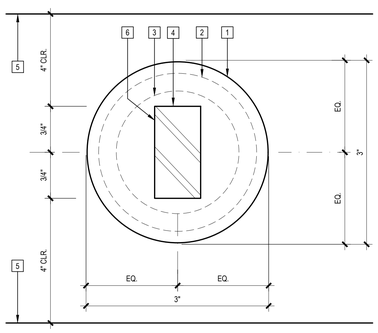

1 1/8" THICK SOLID STOCK STAINLESS STEEL PLATE.

2 BLACK PVC SHIM BELOW.

3 CAST INTO PLACE, CORE DRILL, OR PROVIDE KNOCKOUT. SET POST W/ NON SHRINK GROUT.

4 STEEL POST PER (11 / L5.02)

5 FACE OF WALL. WIDTH PER PLAN.

6 CONTINUOUS WELD ALL FOUR SIDES OF POST TOP SIDE OF PLATE ONLY.

BASE PLATE PLAN ENLARGEMENT | FULL | 19

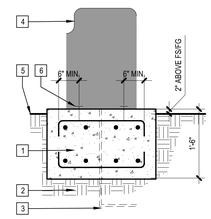

1 24"X17"X18" CONCRETE FOOTING W/ #6 @ 12" O/C T/B EA WAY

2 BASE MATERIAL & SUBGRADE PER GEOTECH REPORT

3 CONDUIT PER ELECTRICAL

4 GATE OPERATOR SWINGSMART535 BY HYSECURITY

5 FINISH SURFACE/ FINISH GRADE

6 PROVIDE MIN (4) 1/2"Ø CONCRETE ANCHORS PER GEN NOTES/S0.02 (3-1/2" EMBED) @ ANCHOR LOCATIONS PER MANUFACTURER. PROVIDE 6" MIN EDGE DISTANCE

NOTE:

INSTALL ALL COMPONENTS PER MANUFACTURER'S RECOMMENDATIONS.

GATE OPERATOR | 3/4" = 1'-0" | 15

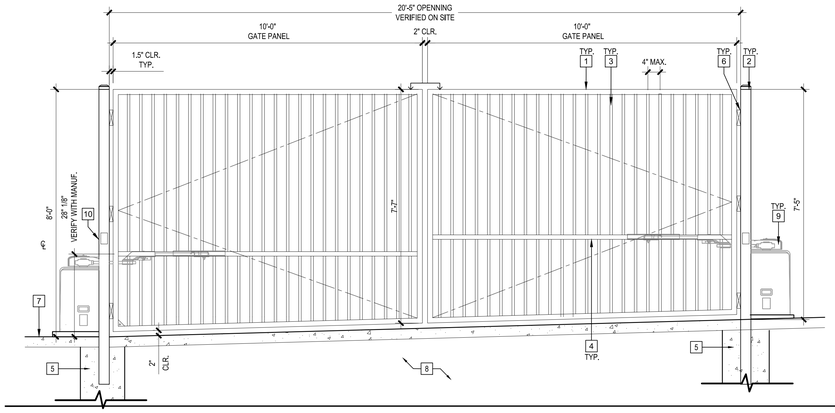

1 2" SQ. TUBE STEEL FRAME

2 4" SQ X 3/16" TUBE STEEL POST W/ FLAT CAP

3 1" SQ X 14 GA. PICKET

4 1 3/4" SQ X 1/8" CROSS RAIL FOR OPERATOR ARM ATTACHMENT, INSTALL PER MANUFACTURER RECOMMENDATIONS.

5 CONCRETE POST CAISSON; PER (13 / -)

6 WELDED HEAVY DUTY HINGES PER MANUFACTURER, FINISH, COATING AND COLOR TO MATCH GATE

7 FINISH SURFACE; PER MATERIALS PLAN

8 BASE MATERIAL & SUBGRADE

9 GATE OPERATOR PER (15 / -)

10 POST MOUNTING PHOTO EYE BY OPERATOR MANUFACTURER

NOTES:
A. ALL WELDS TO BE GROUND SMOOTH. ALL COMPONENTS ARE TO HAVE A SHOP APPLIED POWDER COAT FINISH. REFER TO KEYNOTE LEGEND FOR FINISH.
B. SUBMIT SHOP DRAWINGS FOR REVIEW AND APPROVAL PRIOR TO FABRICATION
C. VALUES SHOWN ARE NOMINAL AND NOT TO BE USED FOR INSTALLATION PURPOSES. SEE PRODUCT SPECIFICATION FOR INSTALLATION REQUIREMENTS
D. VEHICULAR GATE ENLARGED PLAN PER (04 / -)
E. OPEN-MESH GATES W/MAXIMUM LEAF SPAN OR ROLLING SECTION FOR ROLLING GATES OF 10'-0" & APEX HT. LESS THAN 8'-0" ABOVE LOWEST ADJACENT GRADE ARE EXEMPT FROM WELDING SPECIAL INSPECTION

TUBE STEEL AUTOMATIC VEHICULAR SWING GATE | 1/2"=1'-0" | 03

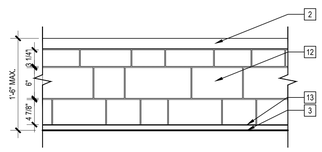

ELEVATION A

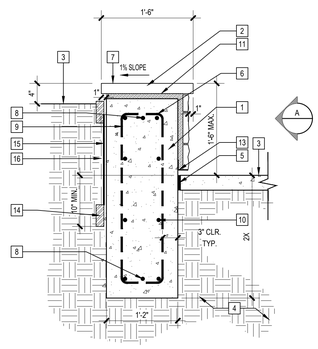

1 CONCRETE RETAINING WALL PER MATERIALS PLAN. REFER TO KEYNOTE LEGEND FOR COLOR & FINISH

2 2" THK. STONE CAP, COLOR AND FINISH PER MATERIAL KEYNOTES

3 FINISH SURFACE/FINISH GRADE; REFER TO MATERIALS PLAN FOR TYPE.

4 OVER-EXCAVATION, SUBGRADE SCARIFICATION/COMPACTION SHALL BE PER GEOTECHNICAL REPORT

5 EXPANSION JOINT PER (06 / L5.01)

6 #3 STIRRUP @ 18" O/C AT TOP OF WALL

7 TOP OF WALL PER CIVIL GRADING PLAN

8 (3) #4 CONTINUOUS AT TOP AND BOTTOM

9 #4 @ 12" O.C. EACH WAY AND EACH FACE

10 CONT # @ 12" O.C. EACH FACE

11 1" THK. MORTAR SETTING BED

12 1" THK. STONE VENEER, COLOR AND FINISH PER MATERIAL KEYNOTES

13 2"X2" METAL FLASHING / 12 GA BENT PLATE

14 MASTIC SEAL AND TERMINATION BAR @ MEMBRANE TERMINATIONS

15 BITUTHENE MEMBRANE OVER PRIMED WALL

16 PROTECTION BOARD OVER BITUTHENE MEMBRANE

STONE VENEER SEATWALL | 1" = 1'-0" | 14

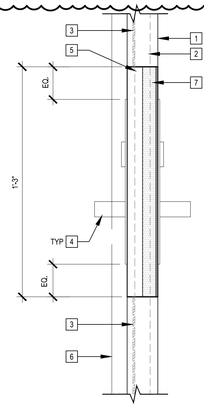

1 GATE FRAME; PER DTL. (02 / -)

2 GATE PICKET (BEYOND)

3 PERFORATED SHEET METAL; ATTACHED TO GATE PICKETS WITH SELF TAPPING SCREWS

4 LEVER HARDWARE: NIGHT LATCH (VON DUPRIN EW ANSI# F07)

5 WELDABLE BOX: KEEDEX K-BXED-V990NL-2; WELDED TO GATE FRAME

6 GATE POST (BEYOND)

7 ASTRAGAL: 1/8" THK. GALV. STEEL ANGLE BAR ; WELDED TO GATE FRAME; PAINTED TO MATCH GATE

NOTE:
1. REFER TO GATE DETAIL FOR DIMENSION AND LOCATION OF HARDWARE FROM FINISH GRADE.

LEVER & LEVER HARDWARE ENLARGEMENT | 3" = 1'-0" | 10

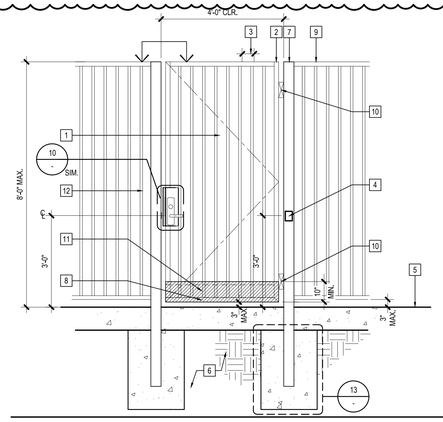

1 1" SQ. TUBULAR STEEL FENCE PICKET

2 2" SQ. TUBULAR STEEL SIDE FRAMES

3 4-11/16" O.C. EQUALLY SPACED

4 SURFACE MOUNTED CARD READER ON PARKING LOT SITE FOR G1 ONLY. MODEL&CONDUIT PER TECHNOLOFY PLAN.

5 FINISH SURFACE

6 BASE MATERIAL & COMPACTED SUBGRADE

7 4" SQ. TUBULAR STEEL POST FLAT CAP PER MANUFACTURER (12 / -)

8 1-3/4" SQ. TUBULAR STEEL BOTTOM RAILS

9 ADJACENT FENCING PER (01 / -)

10 LOCINOX MAMMOTH-HD ULTRA HEAVY DUTY180° HINGE COLOR TO MATCH GATE

11 STEEL GALVANIZED KICKPLATE PER (09 / -)

NOTES:
A. ADDITIONAL INFORMATION PER (01 / -)
B. ALL COMPONENTS TO HAVE A SHOP APPLIED POLYURETHANE PAINT SYSTEM.
C. OPEN-MESH GATES WITH MAXIMUM LEAF SPAN OR ROLLING SECTION FOR ROLLING GATES OF 10'-0" & APEX HT. LESS THAN 8'-0" ABOVE LOWEST ADJACENT GRADE ARE EXEMPT FROM WELDING SPECIAL INSPECTION.
D. ALL GROOVE WELDS TO BE GRIND SMOOTH.

TUBE STEEL SINGLE PEDESTRIAN GATE | 1/2"=1'-0" | 02

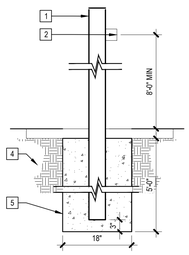

1 3" SQ 3/16" THICK TUBE STEEL POST W/FLAT CAP

2 RFID READER MOUNTED TO POST

3 ADJACENT FINISH GRADING PER LAYOUT AND MATERIALS PLAN.

4 COMPACTED SUBGRADE PER GEOTECHNICAL ENGINEER RECOMMENDATIONS

5 CONCRETE CASSION FOOTING

NOTE:

INSTALL ALL COMPONENTS PER MANUFACTURER'S RECOMMENDATIONS.

NOT PART OF DSA SS REVIEW PER IR A-22 APPENDIX ITEM A9

EQUIP. POST FOOTING | 3/4" = 1'-0" | 21

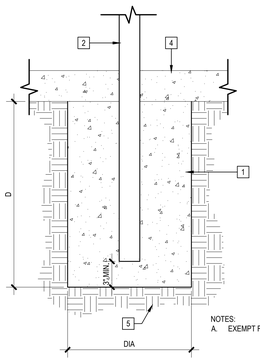

B. FOOTING UNDER PAVING

NOTES:
A. EXEMPT FROM DSA SS REVIEW

1 CONCRETE FOOTING; REFER TO SCHEDULE FOR SIZES; 3500 PSI

2 FENCE OR GATE POSTS

3 FINISH SURFACE / FINISH GRADE

4 CONCRETE OR A.C. PAVING; REFER TO MATERIALS PLAN FOR LOCATIONS; FINISH GRADE

5 SUBGRADE

	FENCE AND GATE FOOTING SCHEDULE BELOW PAVING			
	CAISSON DESCRIPTION	HT.	D	DIA
1B	FENCE CORNER & END POSTS; GATE POSTS (5' SPAN WIDTH MAX.)	8'	5'	18"
2B	LINE POST	8'	5'	18"
3B	GATE POSTS (SPAN WIDTH OVER 5')	8'	5'	18"

FENCE AND GATE POST FOOTING | 1"=1'-0" | 13

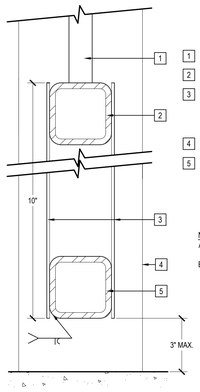

1 TUBULAR STEEL FENCE PICKET

2 TUBULAR STEEL RAIL FRAME

3 12 GA. STEEL GALVANIZED KICKPLATE. WELD TO FRAME TOP & BOTTOM. MOUNT FLUSH W/BOTTOM OF FRAME

4 TUBULAR STEEL GATE POST BEYOND

5 TUBULAR STEEL BOTTOM RAIL FRAME

NOTES:
A. ADDITIONAL NOTES PER (02 / -)
B. OPEN-MESH GATES WITH MAXIMUM LEAF SPAN OR ROLLING SECTION FOR ROLLING GATES OF 10'-0" & APEX HT. LESS THAN 8'-0" ABOVE LOWEST ADJACENT GRADE ARE EXEMPT FROM WELDING SPECIAL INSPECTION.

TUBE STEEL GATE KICKPLATE | 6" = 1'-0" | 09

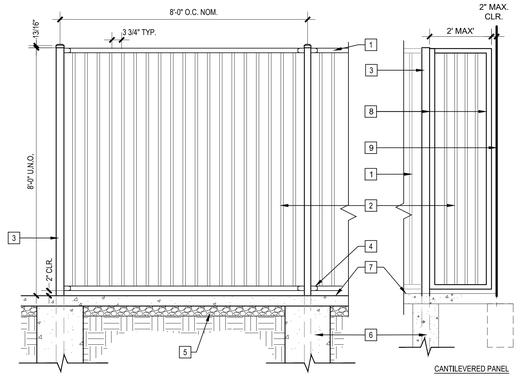

1 FENCE PANEL: AMERISTAR, AEGIS II, CLASSIC, 2-RAIL

2 1" 14 GAUGE PICKET

3 END OR CORNER POST: 3" SQ. X 12 GA; BY MANUFACTURER

4 FLAT MOUNT BRACKET OR PLUS SWIVEL OR UNIVERSAL BOULEVARD BRACK

5 BASE MATERIAL & SUBGRADE

6 CONCRETE POST CAISSON; REFER TO DTL. (13 / -)

7 FINISH SURFACE; PER MATERIALS PLAN

8 2" SQ. CANTILEVERED FENCE PANEL FRAME; WELD CONT., TO POST

9 EXISTING FENCE/ BLDG/WALL

NOTES:
A. ALL COMPONENTS ARE TO HAVE A SHOP APPLIED POWDER COAT FINISH. REFER TO KEYNOTE LEGEND FOR FINISH.
B. SUBMIT SHOP DRAWINGS FOR REVIEW AND APPROVAL PRIOR TO FABRICATION
C. VALUES SHOWN ARE NOMINAL AND NOT TO BE USED FOR INSTALLATION PURPOSES. SEE PRODUCT SPECIFICATION FOR INSTALLATION REQUIREMENTS.
D. WHERE FENCE IS LOCATED ON TOP OF WALL, SEE (01 / L5.02)

NOT PART OF THE DSA APPROVAL PER IR A22

TUBE STEEL FENCE | 1/2" = 1'-0" | 01

LPA
ARCHITECTURE ENGINEERING INTERIOR DESIGN
LANDSCAPE ARCHITECTURE PLANNING
949-261-1001 Office
LPADesignStudios.com
5301 California Avenue, Suite 100
Irvine, California 92617

THE JOBSON FAMILY FOUNDATION

CONCEPT DESIGN:
Landscape Architect
Helle Nebelong
Denmark
hellenebelong.com

This document and all other project documents, ideas, aesthetics and designs incorporated therein are instruments of service. All project documents are copyright protected, are the property of LPA, Inc. (LPA) and cannot be lawfully used in whole or in part for any project or purpose except as set forth in the contractual agreement between LPA and its Client. The unauthorized disclosure and/or use of the project documents (including the creation of derivative works), may give rise to liability for copyright infringement, unlawful disclosure, use or misappropriation of property rights held by LPA. The unauthorized use of the project documents will give rise to the recovery of monetary losses and damages including attorney fees and costs for which the unauthorized user will be held liable.
Project documents describe the design intent of the work and are not a representation of as-built or existing conditions. LPA is not responsible for any discrepancies between the project documents and the existing conditions.

© LPA, Inc.

ALTADENA ARTS MAGNET SCHOOL

743 E CALAVERAS ST.
ALTADENA, CA 91001

Developed for
PASADENA UNIFIED SCHOOL DISTRICT

Revision	Date
Addendum 1	04/28/2026

Submittal	Date
100% SCHEMATIC DESIGN	12/05/2025
DSA SUBMITTAL	02/02/2026
DSA SUBMITTAL V2	03/13/2026

Job Number	33366
Checked By	AG /SC
Scale	AS NOTED

CONSTRUCTION DETAILS

L5.03

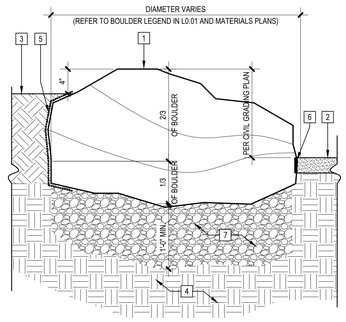

1. BOULDER PER BOULDER LEGEND IN L0.01
2. FINISHED SURFACE, WHERE OCCURS, SEE MATERIALS PLAN
3. FINISHED GRADE AT PLANTING AREA, WHERE OCCURS
4. COMPACTED SUBGRADE PER GEOTECH REPORT
5. SINGLE LAYER OF MIRAFI 140N FILTER FABRIC SOIL SEPARATOR
6. EXPANSION JOINT AT VERTICAL SURFACE PER (06 / L5.01)
7. AGGREGATE BASE PER GEOTECH REPORT

NOTE:
A. BOULDERS AVAILABLE THROUGH MANUFACTURER ON THE BOULDER LEGEND.
B. PROVISIONS ARE TO BE MADE FOR THE PLACEMENT OF BOULDERS ON SITE USING A METHOD ALLOWING FOR FULL 360 DEGREE ROTATION OF BOULDER IN AIR SUCH AS ARTICULATED KNUCKLE BOOM. NO BACK HOE, DRAGGING OR PUSHING OF BOULDERS WILL BE ACCEPTABLE.
C. BOULDERS SHALL BE POWER WASHED PRIOR TO PLACEMENT.
D. FINAL BOULDER LOCATION TO BE SELECTED BY LANDSCAPE ARCHITECT ON SITE DURING INSTALLATION.
E. BOULDER DIAMETER VARIES. REFER TO TABLE AT LEFT AND MATERIALS PLANS FOR BOULDER TYPES, SIZES, AND LOCATION.
F. NATIVE OR FILL SOIL SUPPORTING EXTERIOR NON-STRUCTURAL FLATWORK AND UNPAVED LANDSCAPING AREAS ARE EXEMPT FROM SPECIAL INSPECTION AND TESTING.
G. 1/2" THIVK CEMENT MORTAR IN BETWEEN BOULDERS.

BOULDER RETAINING WALL | 1" = 1'-0" | - | 16

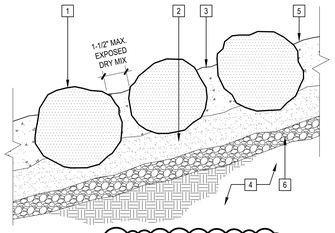

1. HAND SET COBBLE 2"-4". SEE MATERIALS PLAN FOR COLOR AND FINISH
2. 2" SAND LEVELING BED
3. 4" DRY MIX: 1 PART PORTLAND CEMENT, 4 PARTS SAND. WET MORTAR SET.
4. COMPACTED SUBGRADE PER SPECS SECTION 312316
5. FINISHED SURFACE @ SLOPE (WHERE OCCURS)
6. BASE MATERIAL - 4" THICKNESS

NOTES:
A. CONTRACTOR TO PROVIDE FIELD MOCK-UP FOR LANDSCAPE ARCHITECT REVIEW PRIOR TO CONSTRUCTION.
B. EMBED COBBLES APPROXIMATELY 50% THEIR DEPTH INTO DRY MIX

MORTAR SET COBBLE | 3"=1'-0" | - | 12

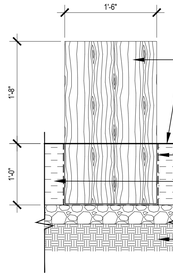

1. WOODEN LOG STEPS PER SITE FURNISHINGS LEGEND ON L0.01
2. ENGINEERED WOOD FIBER (13 / L5.01)
3. MIRAFI FABRIC
4. AGGREGATE AND SUBGRADE PER (13 / L5.01)
5. FINISH GRADE

NOTES:
A. WOODEN LOG STEPS TO BE PROVIDED BY ANGEL CITY LUMBER
B. SEE CIVIL GRADING PLANS FOR PLAY SPACE

WOODEN LOG STEPS | 1" = 1'-0" | - | 08

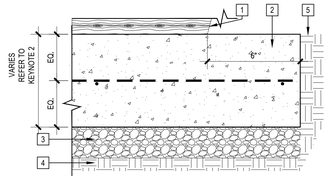

1. WOOD BOAT
2. 6" THICK CONCRETE SLAB
3. AGGREGATE BASE SEE CIVIL
4. SUBGRADE COMPACTION & OVER EXCAVATION SEE CIVIL
5. FINISH GRADE: SEE MATERIAL PER MATERIALS PLAN

NOTES:
A. SAWCUT & EXPANSION JOINTS: REFER TO DETAIL. (02 / L5.01)
B. DO NOT ALLOW CONCRETE OVER-POUR INTO ADJACENT PLANTING AREA.
C. NATIVE OR FILL SOIL SUPPORTING EXTERIOR NON-STRUCTURAL FLATWORK AND UNPAVED LANDSCAPING AREAS ARE EXEMPT FROM SPECIAL INSPECTION AND TESTING.
D. CONCRETE BATCH PLANT INSPECTION IS NOT REQUIRED.

WOOD BOAT CONC. SLAB MOUNTING | 3" = 1'-0" | - | 04

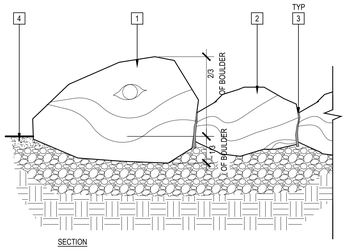

SECTION

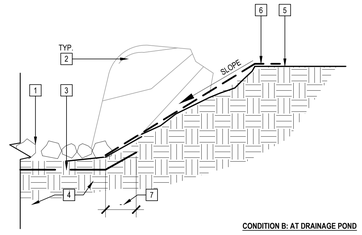

CONDITION B: AT DRAINAGE POND

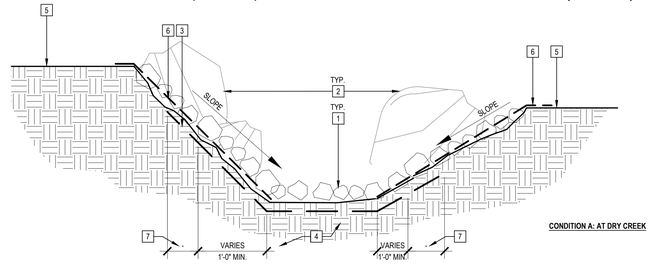

CONDITION A: AT DRY CREEK

1. MORTAR SET COBBLE: COLOR: 50% 3-8" RIVER COBBLE / 50% 8-12" MOUNTAIN COBBLE. (12 / -)
2. BOULDER WHERE OCCURS PER MATERIALS PLANS (12 / L5.01)
3. 'MIRAFI' FILTER FABRIC
4. SUBGRADE COMPACTION AND OVER EXCAVATION SEE CIVIL
5. FINISH GRADE
6. JUTE MESH
7. FILTER FABRIC TO GO BEYOND COBBLE BY 1'-0" MINIMUM

NOTES:
A. SEE CIVIL GRADING PLANS FOR SLOPE.
B. PROVIDE JUTE MESH PER SPECIFICATIONS FOR 2:1 AND GREATER SLOPES.
C. COBBLE SHALL BE PLACED SO THAT NO VISIBLE SOIL SHALL OCCUR.

COBBLE AT DRY CREEK | 1/2" = 1'-0" | - | 11

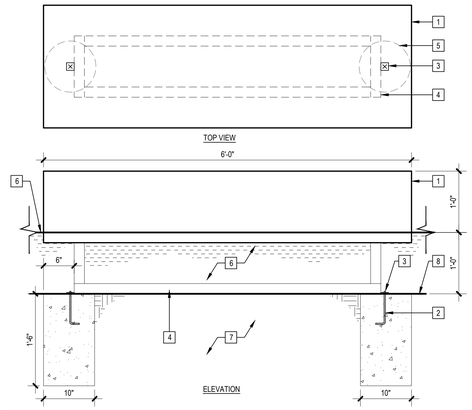

1. WOOD LOG PER SITE FURNISHINGS LEGEND ON L0.01
2. J-BOLT
3. STEEL TAB
4. STEEL FRAME
5. CONCRETE FOOTING
6. ENGINEERED WOOD FIBER
7. COMPACTED BASE AND SUBGRADE
8. FINISH GRADE

NOTES:
A. AFTER CUTTING, BARK TO BE REMOVED FROM ALL SIDES OF LOG.
B. RESIN TO BE APPLIED TO ALL SIDES OF WOOD AFTER BARK REMOVAL. CONTRACTOR TO SUBMIT CUT SHEETS OF ALL CHEMICAL PRODUCTS PRIOR TO APPLICATION FOR LANDSCAPE ARCHITECT'S REVIEW AND OEHS CHEMICAL EVALUATION APPROVAL.
C. LOG LOCATION TO BE SELECTED BY LANDSCAPE ARCHITECT ON SITE PRIOR TO CONCRETE FOOTING INSTALLATION.
D. LOG DIMENSIONS WILL VARY. CONTRACTOR TO ADVISE LANDSCAPE ARCHITECT IF DIMENSIONS DO NOT FALL WITHIN RANGE PER DETAIL.

WOOD LOG | 1" = 1'-0" | - | 03

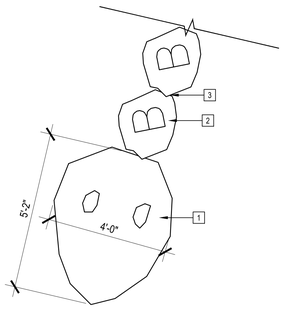

PLAN

1. BOULDER 'H' PER BOULDER LEGEND ON L0.01
2. BOULDER 'B' PER BOULDER LEGEND ON L0.01
3. 1" THICK CEMENT MORTAR IN BETWEEN BOULDERS, TYP.
4. DECOMPOSED GRANITE PAVING PER (10 / L5.01)

NOTES:
A. BOULDERS AVAILABLE THROUGH SOUTHWEST BOULDERS.
B. SNAKE CARVINGS IN FIRST AND LAST BOULDER TO BE APPROVED BY LANDSCAPE ARCHITECT.
C. PROVISIONS ARE TO BE MADE FOR THE PLACEMENT OF BOULDERS ON SITE USING A METHOD ALLOWING FOR FULL 360 DEGREE ROTATION OF BOULDER IN AIR SUCH AS ARTICULATED KNUCKLE BOOM. NO BACK HOE, DRAGGING OR PUSHING OF BOULDERS WILL BE ACCEPTABLE. BOULDERS SHALL BE POWER WASHED PRIOR TO PLACEMENT.

BOULDER SNAKE | 1/2" = 1'-0" | - | 22

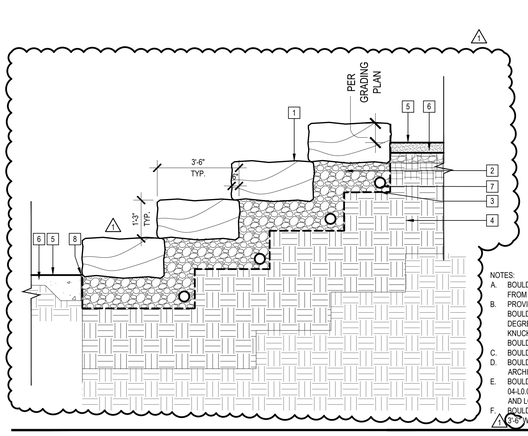

1. BOULDER PER BOULDER SCHEDULE L0.01 TOP: SANDBLASTED FINISH / FRONT: SPLIT NATURAL FINISH / BOTTOM AND BACK: SAWCUT FINISH / BACK: SPLIT NATURAL FINISH
2. AGGREGATE BASE; REFER TO GEOTECH REPORT
3. SOIL SEPARATOR FABRIC "MIRAFI" 140N
4. SUBGRADE; REFER TO GEOTECH REPORT FOR COMPACTION, SCARIFICATION, AND OVER EXCAVATION
5. FINISH SURFACE
6. FINISHED SURFACE, WHERE OCCURS, SEE MATERIALS PLAN
7. 4" PERFORATED DRAINLINE INSTALLED W/PERFORATION DOWN. 1% MIN. GRADIENT FLOW TO POINT OF CONNECTION. CONNECT TO CIVIL STORM DRAIN LINE PER CIVIL STORM DRAIN PLAN
8. EXPANSION JOINT AT VERTICAL SURFACE (05 / L5.01)

NOTES:
A. BOULDERS ARE TO BE SELECTED BY LANDSCAPE ARCHITECT FROM SUPPLY YARD.
B. PROVISIONS ARE TO BE MADE FOR THE PLACEMENT OF BOULDERS ON SITE USING A METHOD ALLOWING FOR FULL 360 DEGREE ROTATION OF BOULDER IN AIR SUCH AS ARTICULATED KNUCKLE BOOM. NO BACK HOE, DRAGGING OR PUSHING OF BOULDERS WILL BE ACCEPTABLE.
C. BOULDERS SHALL BE POWER WASHED PRIOR TO PLACEMENT.
D. FINAL BOULDER LOCATION TO BE SELECTED BY LANDSCAPE ARCHITECT ON SITE DURING INSTALLATION.
E. BOULDER DIAMETER VARIES. REFER TO BOULDER SCHEDULE ON 04-L0.01 AND MATERIALS PLANS FOR BOULDER TYPES, SIZES, AND LOCATION.
F. BOULDERS TO BE CUT TO SIZE PER DIMENSION 3'-6" LENGTH X 1'-3" WIDTH X 1'-3" HEIGHT.

BOULDER AMPHITHEATER SEATING | 1/2" = 1'-0" | - | 02

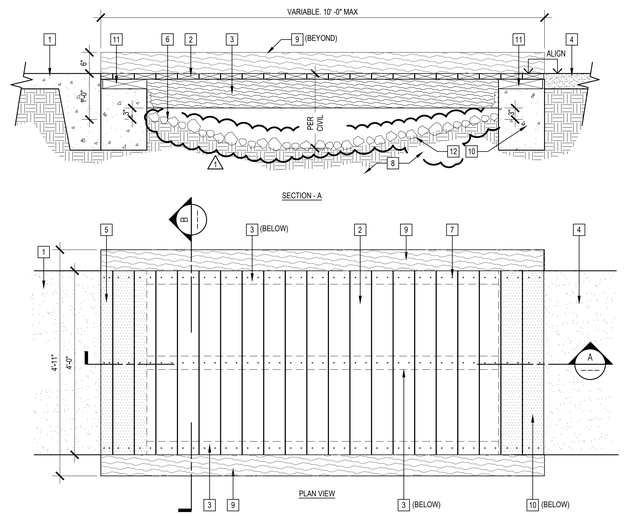

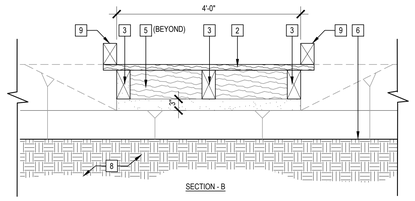

1. CONCRETE PAVING ADJACENT TO WOOD BRIDGE PER MATERIALS PLAN (01 / L5.01)
2. 2X6 A.Y.C. NO. 1 PRESSURE TREATED DECK BOARDS, HOT-DIP GALVANISED. REFER TO MATERIALS PLAN FOR TYPE.
3. 4X8 A.Y.C. NO.1 PRESSURE TREATED BEAM; HOT-DIP GALVANIZED STANDARD/OFFSET WP HANGER TYP. AT ENDS
4. DECOMPOSED GRANITE FINISH SURFACE PER MATERIALS PLAN
5. 3X8 P.T.D.F. LEDGER
6. FINISH GRADE BELOW DECK
7. (2) #9 STAINLESS STEEL SCREWS PER DECK BOARDS AT EACH SUPPORT
8. COMPACTED SUBGRADE PER (01 / L5.01)
9. 4" X 6" WOOD CURB. COUNTER SUNK SCREW AT C.L. OF EVERY 3RD DECK PLANK
10. CONCRETE RETAINING WALL/BRIDGE SUPPORT (21 / -)
11. 4X P.T.D.F. CONT. NAILER W/ 3/4" SS HEADED ANCHORS @ 24" O.C. COUNTERSUNK, 6" EMBEDMENT
12. MORTAR SET COBBLE COLOR: 50% 3-8" RIVER COBBLE / 50% 8-12" MOUNTAIN COBBLE (12 / -)

NOTE:
A. CONTRACTOR TO PROVIDE FULLY CONCEALED TIES, STRAPS, ATTACHMENTS AND CLIPS FOR CONNECTING DECKING AND DECK STRUCTURE.
B. REFER TO MATERIALS PLAN FOR WOOD DECKING AND CURB TYPE.

WOOD BRIDGE | 3/4" = 1'-0" | - | 09

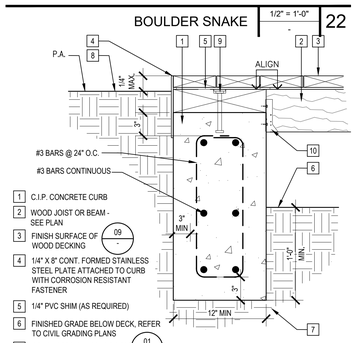

1. C.I.P. CONCRETE CURB
2. WOOD JOIST OR BEAM - SEE PLAN
3. FINISH SURFACE OF WOOD DECKING (09 / -)
4. 1/4" X 8" CONT. FORMED STAINLESS STEEL PLATE ATTACHED TO CURB WITH CORROSION RESISTANT FASTENER
5. 1/4" PVC SHIM (AS REQUIRED)
6. FINISHED GRADE BELOW DECK, REFER TO CIVIL GRADING PLANS
7. COMPACTED SUBGRADE PER (01 / L5.01)
8. FINISHED GRADE AT PERIMETER, REFER TO MATERIAL PLANS FOR ADJACENT MATERIAL
9. 4X P.T.D.F. CONT. NAILER W/ 3/4" SS HEADED ANCHORS @ 24" O.C. COUNTERSUNK, 6" EMBEDMENT
10. SIMP. "HUCTF" S.S. HANGER PER ICC-ES ESR-2553 TYP. NOTE: PROVIDE MIN. 8-16D NAILS TO NAILER

NOTES:
1. VERIFY TOP OF WALL ELEVATIONS WITH CIVIL GRADING PLANS
2. ALL HARDWARE AND FASTENERS IN CONTACT WITH P.T. WOOD SHALL BE STAINLESS STEEL

CONCRETE CURB @ WOOD BRIDGE | 1-1/2" = 1'-0" | - | 21

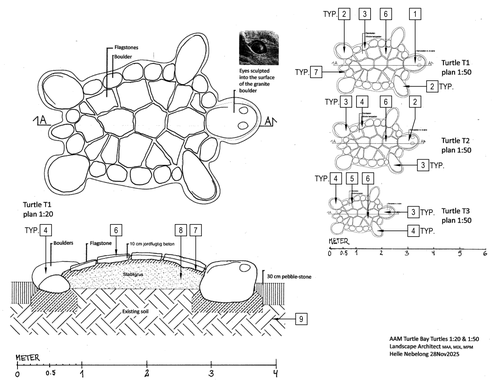

1. 3' DIAMETER BOULDER
2. 2.5' DIAMETER BOULDER
3. 2' DIAMETER BOULDER
4. 1.5' DIAMETER BOULDER
5. 1' DIAMETER BOULDER
6. FLAGSTONE PAVER PER (22 / L5.01)
7. MORTAR; MAX 1-1/2" THICK
8. STABILIZER
9. COMPACTED SUBGRADE AND BASE MATERIAL (01 / L5.01)

NOTE:
A. BOULDERS AVAILABLE THROUGH SOUTHWEST BOULDER; REFER TO BOULDER LEGEND IN L0.01.
B. PROVISIONS ARE TO BE MADE FOR THE PLACEMENT OF BOULDERS ON SITE USING A METHOD ALLOWING FOR FULL 360 DEGREE ROTATION OF BOULDER IN AIR SUCH AS ARTICULATED KNUCKLE BOOM. NO BACK HOE, DRAGGING OR PUSHING OF BOULDERS WILL BE ACCEPTABLE.
C. BOULDERS SHALL BE POWER WASHED PRIOR TO PLACEMENT.
D. FINAL BOULDER LOCATION TO BE SELECTED BY LANDSCAPE ARCHITECT ON SITE DURING INSTALLATION.
E. NATIVE OR FILL SOIL SUPPORTING EXTERIOR NON-STRUCTURAL FLATWORK AND UNPAVED LANDSCAPING AREAS ARE EXEMPT FROM SPECIAL INSPECTION AND TESTING.

STONE TURTLE | N.T.S. | - | 01

LPA
ARCHITECTURE ENGINEERING INTERIOR DESIGN
LANDSCAPE ARCHITECTURE PLANNING
949-261-1001 Office
LPADesignStudios.com
5301 California Avenue, Suite 100
Irvine, California 92617

THE JOBSON FAMILY FOUNDATION

CONCEPT DESIGN:
Landscape Architect
Helle Nebelong
Denmark
hellenebelong.com

This document and all other project documents, ideas, aesthetics and designs incorporated therein are instruments of service. All project documents are copyright protected, are the property of LPA, Inc. (LPA) and cannot be lawfully used in whole or in part for any project or purpose except as set forth in the contractual agreement between LPA and its Client. The unauthorized disclosure and/or use of the project documents (including the creation of derivative works), may give rise to liability for copyright infringement, unlawful disclosure, use or misappropriation of property rights held by LPA. The unauthorized use of the project documents will give rise to the recovery of monetary losses and damages including attorney fees and costs for which the unauthorized user will be held liable.
Project documents describe the design intent of the work and are not a representation of as-built or existing conditions. LPA is not responsible for any discrepancies between the project documents and the existing conditions.

© LPA, Inc.

ALTADENA ARTS MAGNET SCHOOL

743 E CALAVERAS ST.
ALTADENA, CA 91001

Developed for
PASADENA UNIFIED SCHOOL DISTRICT

Revision	Date
Addendum 1	04/28/2026

Submittal	Date
100% SCHEMATIC DESIGN	12/05/2025
DSA SUBMITTAL	02/02/2026
DSA SUBMITTAL V2	03/13/2026

Job Number	33366
Checked By	AG /SC
Scale	AS NOTED

CONSTRUCTION DETAILS

L5.04

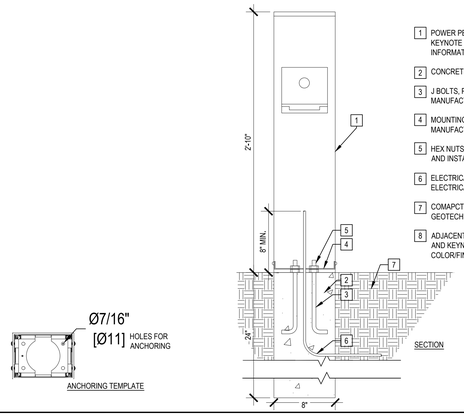

1. POWER PEDESTAL CHARGER, SEE KEYNOTE LEGEND FOR PRODUCT INFORMATION AND FINISH
2. CONCRETE FOOTING
3. J BOLTS, PROVIDE PER MANUFACTURER
4. MOUNTING BRACKET, PROVIDE PER MANUFACTURER
5. HEX NUTS AND WASHERS, PROVIDE AND INSTALL PER MANUFACTURER
6. ELECTRICAL CONDUIT, SEE ELECTRICAL ENGINEER
7. COMAPCTED SUBGRADE PER GEOTECH REPORT
8. ADJACENT PAVING, SEE SITE PLAN AND KEYNOTE LEGEND FOR COLOR/FINISH

POWER PEDESTAL ANCHOR ATTACHMENT | 1 1/2" = 1'-0" | 19

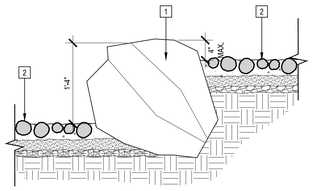

1. 2' BOULDER, SEE BOULDER LEGEND SHEET L0.01. SETTING PER 12/L5.01
2. MORTAR SET COBBLE 12/L5.04

NOTES:
A. CASCADE STEPS PER ELEVATION.
B. FINAL BOULDER LOCATION TO BE SELECTED BY LANDSCAPE ARCHITECT ON SITE DURING INSTALLATION.
C. NATIVE OR FILL SOIL SUPPORTING EXTERIOR NON-STRUCTURAL FLATWORK AND UNPAVED LANDSCAPING AREAS ARE EXEMPT FROM SPECIAL INSPECTION AND TESTING.

DRY CREEK CASCADE | 1" = 1'-0" | 18

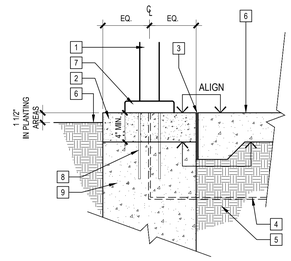

1. LIGHT POLE PER ELECTRICAL PLAN
2. 2'x2' SQ. CONCRETE TOPPING SLAB
3. EXPANSION JOINT WHERE PAVEMENT OCCURS PER 02/L5.01
4. CONDUIT PER ELECTRICAL PLAN
5. COMPACTED SUBGRADE PER GEOTECHNICAL REPORT
6. FINISH SURFACE/ FINISH GRADE
7. BASE COVER PER MANUFACTURER.
8. ANCHOR BOLTS PER MANUFACTURER'S RECOMMENDATIONS.
9. C.I.P. FOOTING, DIMENSIONS AND REINFORCEMENT PER 04/S1.11

NOTES:
1. INSTALL ALL COMPONENTS PER MANUFACTURER'S RECOMMENDATIONS.

LIGHT POLE BASE | 3/4" = 1'-0" | 11

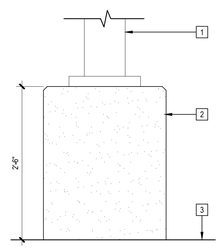

1. LIGHT POLE; FOR MODEL TYPE REFER TO ELECTRICAL LIGHTING FIXTURE SCHEDULE.
2. CONC. CAISSON BASE; MED. SANDBLAST FINISH; NATURAL GRAY COLOR; REFER TO STRUCTURAL 05/S1.11
3. FINISH SURFACE/ FINISH GRADE

LIGHT POLE BASE AT PARKING LOT | 1" = 1'-0" | 10

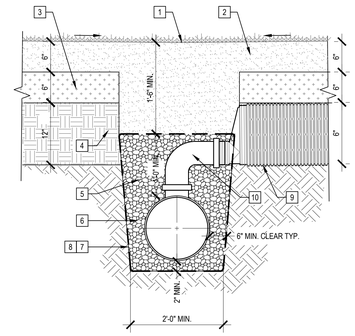

PERIMETER SUBDRAIN AT NATURAL TURF FIELD

1. FINISH GRADE OF ATHLETIC SOD
2. NATURAL TURF AND 6" SAND SUBBASE PER LANDSCAPE PLANTING PLANS
3. 6" AMENDED SOIL PER SPECS
4. EXISTING SUBGRADE, SCARIFY RIP AND CROSS RIP PER GEOTECHNICAL REPORT
5. 3/4" ANGULAR WASHED CLEAN DRAIN ROCK
6. PERFORATED HDPE DRAIN PIPE PER CIVIL PLANS
7. BATTER SIDES OF TRENCH 1:12
8. WRAP SUBDRAIN TRENCH DRAIN ROCK WITH MIRAFI 140N FILTER FABRIC WITHOUT WRINKLES OR DEFORMITIES
9. 12" MULTIFLOW FLAT DRAIN, MODEL 1200 WITH SLEEVE. INSTALL VERTICALLY PER 06/-
10. CONNECT SUBDRAIN TO PERFORATED PIPE DRAIN PER CIVIL PLANS.

PERIMETER SUBDRAIN | NTS | 07

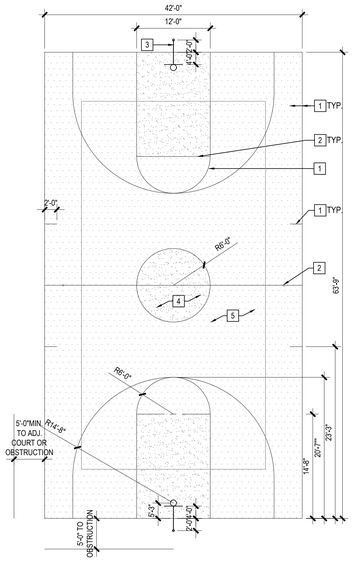

1. SOLID YELLOW LINE
2. SOLID WHITE LINE
3. BASKETBALL HOOP PER EXISTING BASKETBALL HOOP
4. SOLAR REFLECTIVE PAVEMENT COATING PER SPECIFICATIONS - COLOR: RAL 2007
5. SOLAR REFLECTIVE PAVEMENT COATING PER SPECIFICATIONS - COLOR: RAL 2017

BASKETBALL COURT STRIPING | N.T.S. | 02

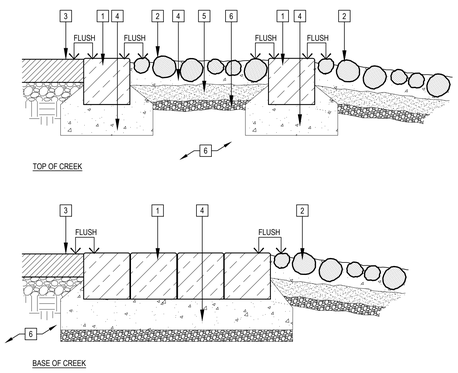

1. 6"X6"X6" COBBLESTONE CURB SET IN MORTAR. REFER TO MATERIAL PLAN FOR COLOR AND FINISH
2. MORTAR SET COBBLE PER 12/L5.04
3. ADJACENT PAVING; SEE MATERIALS PLAN
4. 4" DRY MIX: 1 PART PORTLAND CEMENT, 4 PARTS SAND. WET MORTAR SET
5. 2" SAND LEVELING BED
6. AGGREGATE BASE; REFER TO GEOTECH REPORT
7. SUBGRADE; REFER TO GEOTECH REPORT FOR COMPACTION, SCARIFICATION, AND OVER EXCAVATION

NOTES:
A. CONTRACTOR TO PROVIDE FIELD MOCK-UP FOR LANDSCAPE ARCHITECT REVIEW PRIOR TO CONSTRUCTION.
B. EMBED COBBLES APPROXIMATELY 50% THEIR DEPTH INTO DRY MIX

DRY CREEK BASIN | 1 1/2" = 1'-0" | 17

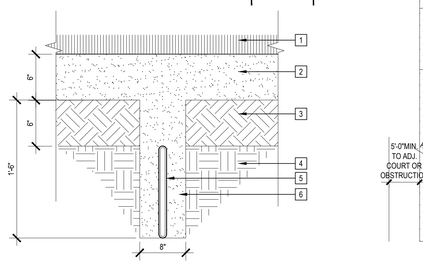

1. NATURAL TURF BIG ROLL SOD, PER PLANTING PLANS
2. USGA SAND-BASED GROWING MEDIUM ROOT ZONE: (SEE SPECS)
3. AMENDED ONSITE SOIL ROTO-TILLED OR INCORPORATED PER GEOTECHNICAL REPORT
4. EXISTING SUBGRADE PER GEOTECHNICAL REPORT. SCARIFY, RIP AND CROSS RIP TOP A MIN OF 12".
5. 12" MULTI FLOW VERTICAL DRAIN WITH FILTER FABRIC PER CIVIL
6. SAND CHANNEL PER CIVIL

NOTES:
A. PROVIDE HARD PIPE CONNECTION FROM VERTICAL DRAINS TO PERIMETER TRENCH STORM DRAINAGE PER 07/-

NATURAL TURF | 1 1/2" = 1'-0" | 06

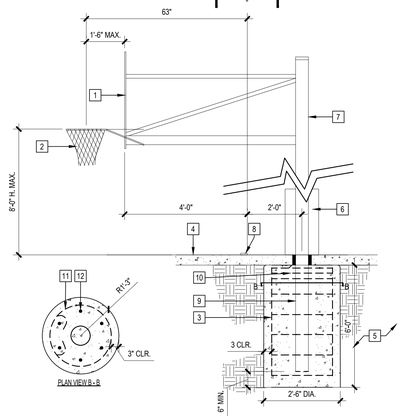

1. BASKETBALL BACKBOARD. FOR ADDITIONAL INFORMATION REFER TO SITE FURNISHING LEGEND, L0.01.
2. HEAVY DUTY BREAKAWAY DOUBLE RIM GOAL W/MOUNTING HARDWARE & NET.
3. CONCRETE FOOTING
4. AC PAVING PER CIVIL PLANS
5. SUBGRADE PER GEOTECHNICAL REPORT
6. PP-656 PAD AT POST. 6 FT. ABOVE FINISH GRADE. GRAPHICS TBD BY DISTRICT
7. 5-9/16" O.D. HEAVY-DUTY SCHEDULE 40 (0.258" THK.) GALVANIZED STEEL UPRIGHT POST WITH TOP END CAPPED. SEE SITE FURNISHINGS LEGEND, L0.01. FOR COLOR AND FINISH.
8. COURT STRIPING PER 02/-
9. NON-TWIST SLEEVE
10. (3) TIES WITHIN 5" OF CAISSON TOP
11. #3 CLOSED TIES @ 8" O/C
12. (6) #5 VERTICAL BARS

NOTES:
A. ALL COMPONENTS ARE PER THE MANUFACTURER'S RECOMMENDATIONS. CONTRACTOR IS TO VERIFY ALL MODEL #'S TO MATCH WRITTEN DESCRIPTION & FOR DUPLICATION. INSTALL PER MANUFACTURER'S RECOMMENDATIONS.
B. ALL FASTENERS TO BE STAINLESS STEEL
C. POST AND ADJUSTABLE OFFSET SHALL BE POWDERCOATED BLACK TO MATCH

BASKETBALL POLE & BACKBOARD ASSEMBLY | 1/2"=1'-0" | 01

LPA
ARCHITECTURE ENGINEERING INTERIOR DESIGN
LANDSCAPE ARCHITECTURE PLANNING
949-261-1001 Office
LPADesignStudios.com
5301 California Avenue, Suite 100
Irvine, California 92617

THE JOBSON FAMILY FOUNDATION

CONCEPT DESIGN:
Landscape Architect
Helle Nebelong
Denmark
hellenebelong.com

This document and all other project documents, ideas, aesthetics and designs incorporated therein are instruments of service. All project documents are copyright protected, are the property of LPA, Inc. (LPA) and cannot be lawfully used in whole or in part for any project or purpose except as set forth in the contractual agreement between LPA and its Client. The unauthorized disclosure and/or use of the project documents (including the creation of derivative works), may give rise to liability for copyright infringement, unlawful disclosure, use or misappropriation of property rights held by LPA. The unauthorized use of the project documents will give rise to the recovery of monetary losses and damages including attorney fees and costs for which the unauthorized user will be held liable.
Project documents describe the design intent of the work and are not a representation of as-built or existing conditions. LPA is not responsible for any discrepancies between the project documents and the existing conditions.

© LPA, Inc.

ALTADENA ARTS MAGNET SCHOOL

743 E CALAVERAS ST.
ALTADENA, CA 91001

Developed for
PASADENA UNIFIED SCHOOL DISTRICT

Revision	Date
Addendum 1	04/28/2026

Submittal	Date
100% SCHEMATIC DESIGN	12/05/2025
DSA SUBMITTAL	02/02/2026
DSA SUBMITTAL 1/2	03/13/2026

Job Number	33366
Checked By	AG /SC
Scale	AS NOTED

CONSTRUCTION DETAILS

L5.05

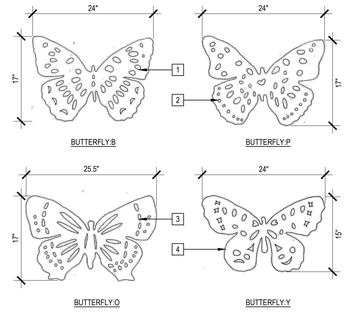

1	BUTTERFLY B RAL: 2011	3	BUTTERFLY: O RAL: 2017
2	BUTTERFLY: P RAL: 2012	4	BUTTERFLY: Y RAL: 2007

BUTTERFLY STRIPING — 1" = 1'-0" — 04

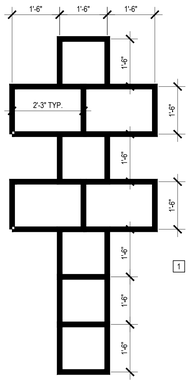

1 4" THICK LINES IN SR WHITE BY STREETBOND W/ DURASHIELD COATING

NOTES:
A. REFERENCE L8.01 STRIPING PLAN FOR LOCATION AND MORE INFORMATION.

HOPSCOTCH STRIPING — N.T.S. — L8.01 — 03

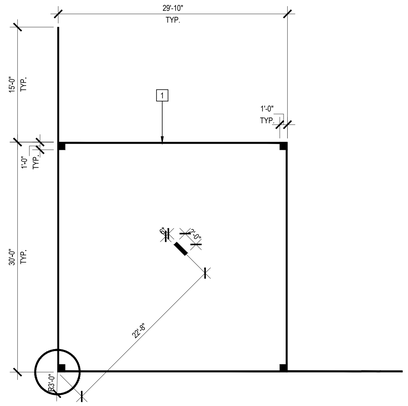

1 4" THICK LINES IN SR WHITE BY STREETBOND W/ DURASHIELD COATING

NOTES:
A. REFERENCE L8.01 STRIPING PLAN FOR LOCATION AND MORE INFORMATION.

KICKBALL STRIPING — N.T.S. — L8.01 — 02

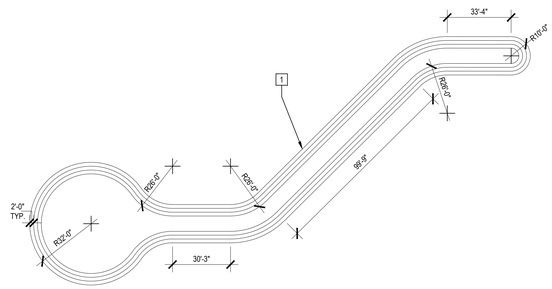

1 4" THICK LINES IN SR WHITE BY STREETBOND W/ DURASHIELD COATING

NOTES:
A. REFERENCE L8.01 STRIPING PLAN FOR LOCATION AND MORE INFORMATION

RUNNING TRACK STRIPING — 3/8" = 1'-0" — L8.01 — 01

LPA
ARCHITECTURE ENGINEERING INTERIOR DESIGN
LANDSCAPE ARCHITECTURE PLANNING
949-261-1001 Office
LPADesignStudios.com
5301 California Avenue, Suite 100
Irvine, California 92617

THE JOBSON FAMILY FOUNDATION

CONCEPT DESIGN:
Landscape Architect
Helle Nebelong
Denmark
hellenebelong.com

This document and all other project documents, ideas, aesthetics and designs incorporated therein are instruments of service. All project documents are copyright protected, are the property of LPA, Inc. (LPA) and cannot be lawfully used in whole or in part for any project or purpose except as set forth in the contractual agreement between LPA and its Client. The unauthorized disclosure and/or use of the project documents (including the creation of derivative works), may give rise to liability for copyright infringement, unlawful disclosure, use or misappropriation of property rights held by LPA. The unauthorized use of the project documents will give rise to the recovery of monetary losses and damages including attorney fees and costs for which the unauthorized user will be held liable.
Project documents describe the design intent of the work and are not a representation of as-built or existing conditions. LPA is not responsible for any discrepancies between the project documents and the existing conditions.

© LPA, Inc.

ALTADENA ARTS MAGNET SCHOOL

743 E CALAVERAS ST.
ALTADENA, CA 91001

Developed for
PASADENA UNIFIED SCHOOL DISTRICT

Revision	Date
Addendum 1	04/28/2026

Submittal	Date
100% SCHEMATIC DESIGN	12/05/2025
DSA SUBMITTAL	02/02/2026
DSA SUBMITTAL V2	03/13/2026

Job Number	33366
Checked By	AG /SC
Scale	AS NOTED

CONSTRUCTION DETAILS

L5.06

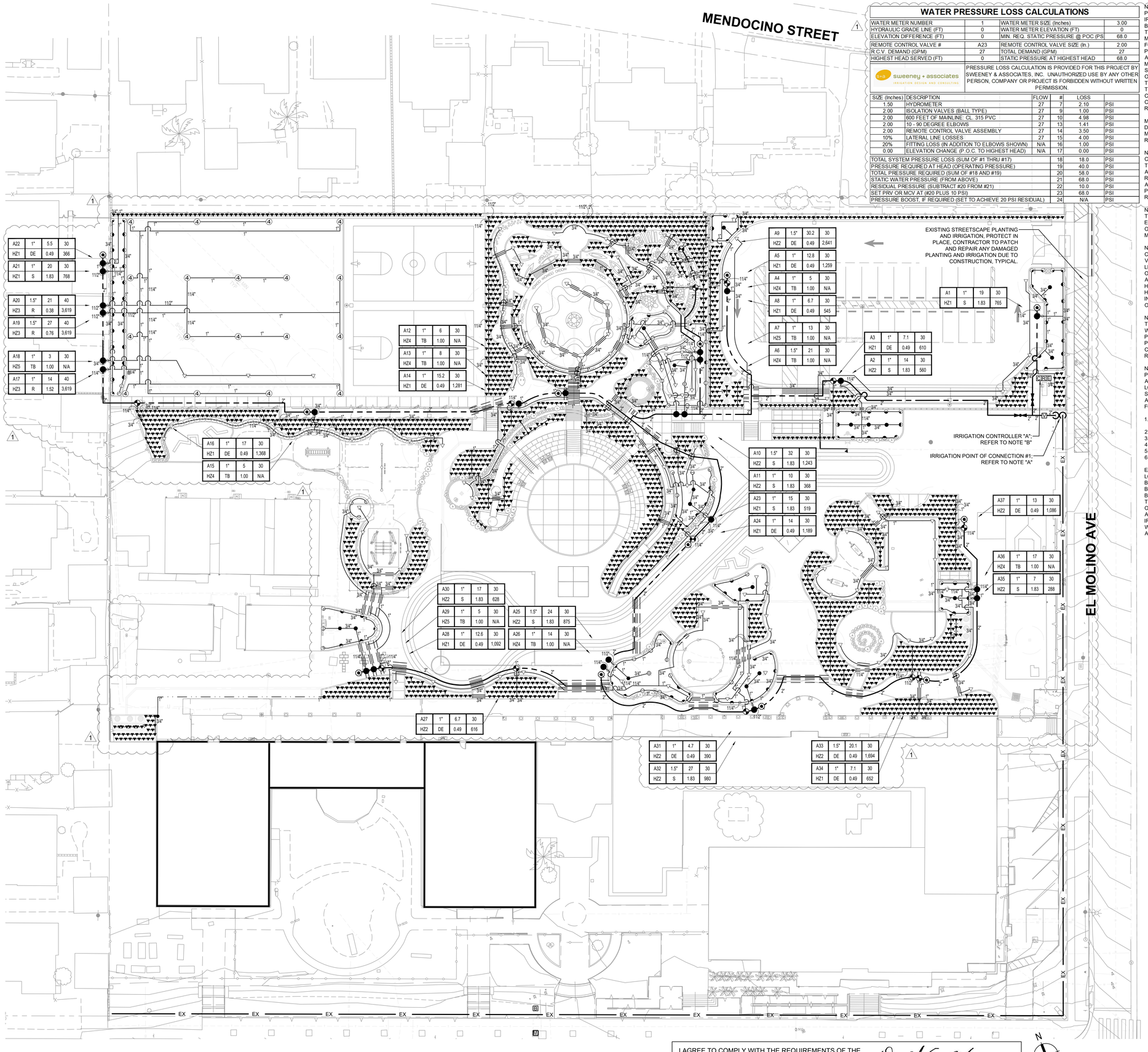

WATER PRESSURE LOSS CALCULATIONS

WATER METER NUMBER	1	WATER METER SIZE (Inches)	3.00
HYDRAULIC GRADE LINE (FT)	0	WATER METER ELEVATION (FT)	0
ELEVATION DIFFERENCE (FT)	0	MIN. REQ. STATIC PRESSURE @ POC (PS	68.0
REMOTE CONTROL VALVE #	A23	REMOTE CONTROL VALVE SIZE (in.)	2.00
R.C.V. DEMAND (GPM)	27	TOTAL DEMAND (GPM)	27
HIGHEST HEAD SERVED (FT)	0	STATIC PRESSURE AT HIGHEST HEAD	68.0

sweeney + associates
IRRIGATION DESIGN AND CONSULTING

PRESSURE LOSS CALCULATION IS PROVIDED FOR THIS PROJECT BY SWEENEY & ASSOCIATES, INC. UNAUTHORIZED USE BY ANY OTHER PERSON, COMPANY OR PROJECT IS FORBIDDEN WITHOUT WRITTEN PERMISSION.

SIZE (Inches)	DESCRIPTION	FLOW	#	LOSS	
1.50	HYDROMETER	27	7	2.10	PSI
2.00	ISOLATION VALVES (BALL TYPE)	27	9	1.00	PSI
2.00	600 FEET OF MAINLINE: CL. 315 PVC	27	10	4.98	PSI
2.00	10 - 90 DEGREE ELBOWS	27	13	1.41	PSI
2.00	REMOTE CONTROL VALVE ASSEMBLY	27	14	3.50	PSI
10%	LATERAL LINE LOSSES	27	15	4.00	PSI
20%	FITTING LOSS (IN ADDITION TO ELBOWS SHOWN)	N/A	16	1.00	PSI
0.00	ELEVATION CHANGE (P.O.C. TO HIGHEST HEAD)	N/A	17	0.00	PSI
TOTAL SYSTEM PRESSURE LOSS (SUM OF #1 THRU #17)			18	18.0	PSI
PRESSURE REQUIRED AT HEAD (OPERATING PRESSURE)			19	40.0	PSI
TOTAL PRESSURE REQUIRED (SUM OF #18 AND #19)			20	58.0	PSI
STATIC WATER PRESSURE (FROM ABOVE)			21	68.0	PSI
RESIDUAL PRESSURE (SUBTRACT #20 FROM #21)			22	10.0	PSI
SET PRV OR MCV AT (#20 PLUS 10 PSI)			23	68.0	PSI
PRESSURE BOOST, IF REQUIRED (SET TO ACHIEVE 20 PSI RESIDUAL)			24	N/A	PSI

NOTE A:
POINT OF CONNECTION (POC) #1 SHALL BE 2" CONNECTION INTO AN EXISTING 2" IRRIGATION MAINLINE DOWNSTREAM OF A 3" DOMESTIC WATER METER AND A 3" BACKFLOW DEVICE. THE CONTRACTOR SHALL VERIFY THE ACTUAL LOCATION, WATER TYPE, METER SIZE AND WATER PRESSURE IN THE FIELD PRIOR TO STARTING WORK. MEASUREMENT OF THE STATIC (NO WATER MOVING) WATER PRESSURE IS ACCEPTABLE FOR POTABLE WATER SYSTEMS WHERE NO PUMP HAS BEEN INDICATED ON THESE PLANS. WHEN USING RECYCLED WATER, OR ON POTABLE WATER SYSTEMS REQUIRING A PUMP, ONLY THE MEASUREMENT OF DYNAMIC (WATER MOVING THROUGH THE METER) WATER PRESSURE, SHALL BE ACCEPTABLE. THE DYNAMIC WATER PRESSURE SHALL BE MEASURED AT THE MAXIMUM SYSTEM DEMAND AS INDICATED BELOW. IF ANY OF THE POC INFORMATION SHOWN ON THESE DRAWING IS FOUND TO BE DIFFERENT THAN THE ACTUAL POC INFORMATION GATHERED IN THE FIELD, IMMEDIATELY NOTIFY THE LANDSCAPE ARCHITECT AND IRRIGATION CONSULTANT. SHOULD THE CONTRACTOR FAIL TO VERIFY THE POC INFORMATION AS SHOWN HEREIN, ANY CHANGES REQUIRED BY LOW PRESSURE OR VOLUME SHALL BE THE SOLE RESPONSIBILITY OF THE CONTRACTOR.

MINIMUM REQUIRED WATER PRESSURE AT POC:	68	PSI (STATIC)
DESIGN WATER PRESSURE:	58	PSI
MAXIMUM SYSTEM DEMAND:	32	GPM
RESIDUAL WATER PRESSURE:	10	PSI

NOTE B:
CONTROLLER "A" SHALL BE OF THE BRAND, MODEL AND STATION SIZE AS INDICATED ON THE IRRIGATION MATERIALS LEGEND. THE CONTROLLER SHALL BE INSTALLED IN THE APPROXIMATE LOCATION SHOWN. THE CONTRACTOR SHALL COORDINATE THE REQUIRED ELECTRICAL POWER SUPPLY AT THIS LOCATION WITH THE OWNER'S AUTHORIZED REPRESENTATIVE. FINAL LOCATION OF CONTROLLER AND ELECTRICAL POINT OF CONNECTION SHALL BE CONFIRMED WITH OWNER'S AUTHORIZED REPRESENTATIVE PRIOR TO STARTING WORK.

NOTE C:
THESE PLANS ARE DIAGRAMMATIC, THE MAINLINE AND RELATED IRRIGATION EQUIPMENT IS SHOWN WITHIN THE PAVING FOR CLARITY ONLY. THE ACTUAL LOCATION OF MAINLINE AND RELATED IRRIGATION EQUIPMENT SHALL BE WITHIN PLANTER AND A MINIMUM OF 18" OFF ADJACENT HARDSCAPE AND OTHER OBSTACLES, TYPICAL.

NOTE D:
CONTRACTOR SHALL ADJUST ALL HEADS AS REQUIRED TO ACCOMMODATE ANY VERTICAL OBSTRUCTIONS THAT MAY OCCUR IN THE LANDSCAPE, INCLUDING BUT NOT LIMITED TO LIGHT POLES, FIRE HYDRANTS, TREES, ETC. WHEN A SLIGHT RELOCATION OF THE HEAD IS NOT SUFFICIENT TO CLEAR THE OBSTACLE, OR IF IT NEGATIVELY AFFECTS THE COVERAGE, AN ADDITIONAL HEAD SHALL BE INSTALLED TO PLACE ONE HEAD ON EITHER SIDE OF THE OBSTACLE. THE NOZZLES OF THESE TWO HEADS SHALL HAVE ARC PATTERNS THAT ADD UP TO THE ORIGINAL ARC PATTERN OF THE HEAD INDICATED ON THE PLANS. THE CONTRACTOR SHALL VERIFY ALL HEAD LAYOUT WITH OWNER'S AUTHORIZED REPRESENTATIVE PRIOR TO STARTING WORK.

NOTE E:
THESE PLANS ARE DIAGRAMMATIC, TREE BUBBLERS AND LATERAL LINES ARE SHOWN WITHIN THE PAVING FOR CLARITY ONLY, THE ACTUAL LOCATIONS SHALL BE WITHIN THE PLANTER. THE TREE BUBBLERS SHALL BE ALIGNED WITH TREES AS SHOWN ON THE PLANTING PLANS, AND AS DIRECTED BY OWNER'S AUTHORIZED REPRESENTATIVE. THE CONTRACTOR SHALL CONFIRM ALL LAYOUT IN FIELD WITH OWNER'S AUTHORIZED REPRESENTATIVE PRIOR TO STARTING WORK.

NOTE F:
PRIOR TO START OF CONSTRUCTION THE CONTRACTOR SHALL SUBMIT TO THE OWNER AND LANDSCAPE ARCHITECT A SCALED SHOP DRAWING INDICATING THE PROPOSED LOCATIONS FOR THE IRRIGATION EQUIPMENT LISTED BELOW. THE SHOP DRAWING SHALL BE PREPARED TO THE SATISFACTION OF THE OWNER AND LANDSCAPE ARCHITECT. SHOP DRAWINGS MUST INCLUDE THE PROPOSED LOCATIONS FOR THE FOLLOWING ITEMS:

1. POINT OF CONNECTION (INCLUDING WATER POC, BACK FLOW DEVICES, MASTER CONTROL VALVES, FLOW SENSORS, ETC.)
2. ISOLATION VALVES
3. AUTOMATIC CONTROL VALVES (INDICATE STATION NUMBER)
4. QUICK COUPLING VALVES
5. IRRIGATION CONTROLLER(S)
6. RELATED EQUIPMENT (AS MAY BE DIRECTED).

EACH PIECE OF AFOREMENTIONED EQUIPMENT SHALL HAVE IT'S PROPOSED INSTALLED LOCATION SHOWN ON THE SHOP DRAWINGS. THE SYMBOL FOR EACH PRODUCT SHALL BE A SCALED REPRESENTATION OF THE FOOTPRINT OF THE EQUIPMENT OR THE VALVE BOX IN WHICH THE EQUIPMENT IS INSTALLED. CONTRACTOR SHALL INSTALL ALL VALVE BOXES AND RELATED EQUIPMENT PER THE OWNER APPROVED SHOP DRAWINGS. ONCE THE SHOP DRAWING LOCATIONS ARE APPROVED, THE LANDSCAPE ARCHITECT OR OWNER'S AUTHORIZED REPRESENTATIVE WILL ALLOW NO ADJUSTMENTS TO THE APPROVED VALVE BOX PLACEMENT WITHOUT PRIOR WRITTEN ACCEPTANCE. ANY IRRIGATION EQUIPMENT INSTALLED WITHOUT PRIOR APPROVAL WITH SHOP DRAWINGS WILL BE SUBJECT TO RELOCATION BASED ON DIRECTION BY THE LANDSCAPE ARCHITECT AT THE CONTRACTOR'S EXPENSE.

I AGREE TO COMPLY WITH THE REQUIREMENTS OF THE WATER EFFICIENT LANDSCAPE ORDINANCE AND SUBMIT A COMPLETE LANDSCAPE DOCUMENTATION PACKAGE

SIGNATURE: DATE: 04-16-26

I HAVE COMPLIED WITH THE CRITERIA OF THE IRRIGATION GUIDELINES AND APPLIED THEM ACCORDINGLY FOR THE EFFICIENT USE OF WATER IN THE IRRIGATION DESIGN PLAN

sweeney + associates
IRRIGATION DESIGN AND CONSULTING
38730 Sky Canyon Drive, Suite C
Murrieta, Ca 92563
e: info@sweeneyassoc.com t: (951) 461-6830
w: www.sweeneyassoc.com f: (951) 461-6850

IRRIGATION PLAN 1" = 20' 05

0 10 20 40

LPA
ARCHITECTURE ENGINEERING INTERIOR DESIGN
LANDSCAPE ARCHITECTURE PLANNING
949-261-1001 Office
LPADesignStudios.com
5301 California Avenue, Suite 100
Irvine, California 92617

THE JOBSON FAMILY FOUNDATION

CONCEPT DESIGN:
Landscape Architect
Helle Nebelong
Denmark
hellenebelong.com

This document and all other project documents, ideas, aesthetics and designs incorporated therein are instruments of service. All project documents are copyright protected, are the property of LPA, Inc. (LPA) and cannot be lawfully used in whole or in part for any project or purpose except as set forth in the contractual agreement between LPA and its Client. The unauthorized disclosure and/or use of the project documents (including the creation of derivative works), may give rise to liability for copyright infringement, unlawful disclosure, use or misappropriation of property rights held by LPA. The unauthorized use of the project documents will give rise to the recovery of monetary losses and damages including attorney fees and costs for which the unauthorized user will be held liable.
Project documents describe the design intent of the work and are not a representation of as-built or existing conditions. LPA is not responsible for any discrepancies between the project documents and the existing conditions.

© LPA, Inc.

ALTADENA ARTS MAGNET SCHOOL

743 E CALAVERAS ST.
ALTADENA, CA 91001

Developed for
PASADENA UNIFIED SCHOOL DISTRICT

Revision	Date
Addendum 1	04/17/2026

Submittal	Date
100% SCHEMATIC DESIGN	12/05/2025
DSA SUBMITTAL	02/02/2026
DSA SUBMITTAL V2	03/13/2026

Job Number	33366
Checked By	AG /SC
Scale	1" = 20'

IRRIGATION PLAN

L6.01

WATER AUDIT AND MAINTENANCE SCHEDULE

THE CONTRACTOR WILL CONDUCT AN IRRIGATION AUDIT USING A CERTIFIED IRRIGATION AUDITOR, AFTER THE FINAL FIELD OBSERVATION HAS BEEN COMPLETED AND ALL IRRIGATION COMPONENTS ARE INSTALLED IN ACCORDANCE WITH THE PLANS AND SPECIFICATIONS AND THE IRRIGATION SYSTEM IS ACCEPTED BY THE PROJECT ARCHITECT FOR MAINTENANCE.

THE IRRIGATION AUDIT WILL BE CONDUCTED IN ACCORDANCE WITH THE FOLLOWING SCHEDULE:

1. PLACE FLAGS AT EACH HEAD IN THE ZONE
2. MEASURE SPACING AND MARK MID POINTS BETWEEN HEADS.
3. PLACE WATER MEASURING RECEPTACLES.
4. TAKE READINGS OF WATER LEVEL IN RECEPTACLES AND RECORD RESULTS.
5. MEASURE HEAD PRESSURE IN EACH ZONE AND RECORD RESULTS.
6. AFTER COMPLETING ZONE ADVANCE TO NEXT ZONE AND REPEAT PROCEDURE.
7. SUBMIT THE RESULTS OF THE AUDIT TO THE PROJECT ARCHITECT.

THE IRRIGATION MAINTENANCE SCHEDULE TASKS LISTED BELOW ARE INTENDED AS MINIMUM STANDARDS AND MORE FREQUENT ATTENTION MAY BE REQUIRED DEPENDING ON THE PARTICULAR SITE CONDITIONS.

MAINTENANCE TASK

1. CONTROLLER CABINET - OPEN CABINET AND CLEAN OUT DEBRIS AND REPLACE BATTERY AS NECESSARY. CHECK WIRING AND REPAIR AS NEEDED AND CHECK CLOCK AND RESET IF NECESSARY.
FREQUENCY: QUARTERLY

2. IRRIGATION SCHEDULE - ADJUST SCHEDULE FOR SEASONAL VARIATIONS AND OTHER CONDITIONS WHICH MAY AFFECT THE AMOUNT OF WATER NEEDED TO MAINTAIN PLANT HEALTH ADJUST AS NECESSARY.
FREQUENCY: MONTHLY

3. POC - VISUALLY INSPECT COMPONENTS FOR LEAKS, PRESSURE SETTINGS, SETTLEMENT OR OTHER DAMAGE AFFECTING THE OPERATION OF A COMPONENT. REPAIR AS NEEDED.
FREQUENCY: QUARTERLY

4. REMOTE CONTROL VALVES, ISOLATION VALVES AND QUICK COUPLER VALVES - VISUALLY INSPECT FOR LEAKS, SETTLEMENT, WIRE CONNECTIONS AND PRESSURE SETTINGS. REPAIR OR ADJUST AS NEEDED.
FREQUENCY: QUARTERLY

5. MAINLINE & LATERALS - VISUALLY INSPECT FOR LEAKS OR SETTLEMENT OF TRENCH.
FREQUENCY: QUARTERLY

6. SPRINKLERS - VISUALLY CHECK FOR ANY BROKEN MISALIGNED OR CLOGGED HEADS. HEADS WITH INCORRECT ARC, INADEQUATE COVERAGE OR OVERSPRAY AND LOW HEAD DRAINAGE. REPAIR AS NEEDED.
FREQUENCY: WEEKLY

7. FILTERS AND STRAINERS - VISUALLY CHECK FOR LEAKS, BROKEN FITTING, CLEAN AND FLUSH SCREENS.

AUDIT SHALL BE IN ACCORDANCE WITH THE LATEST STATE OF CALIFORNIA LANDSCAPE WATER MANAGEMENT PROGRAM AS DESCRIBED IN THE LATEST LANDSCAPE IRRIGATION AUDITOR HANDBOOK. THE LANDSCAPE IRRIGATION AUDITS TO BE CONDUCTED BY A QUALIFIED INDIVIDUAL AND THE AUDIT SCHEDULE SHALL BE CONDUCTED AT LEAST ONCE EVERY FIVE YEARS IN ACCORDANCE WITH THE REQUIREMENTS OF TITLE 20, DIVISION 1 OF THE LOS ANGELES COUNTY CODE.

MAINTENANCE SCHEDULES. A REGULAR MAINTENANCE SCHEDULE SATISFYING THE FOLLOWING CONDITIONS SHALL BE SUBMITTED AS PART OF THE LANDSCAPE DOCUMENTATION PACKAGE.

LANDSCAPE SHALL BE MAINTAINED TO ENSURE WATER EFFICIENCY. A REGULAR MAINTENANCE SCHEDULE SHALL INCLUDE, BUT NOT BE LIMITED TO, CHECKING, ADJUSTING, AND REPAIRING IRRIGATION EQUIPMENT, RESETTING THE AUTOMATIC CONTROLLER, AERATING AND DETHATCHING TURF AREAS, REPLENISHING MULCH, FERTILIZING, PRUNING, AND WEEDING IN ALL LANDSCAPE AREAS.

WHENEVER POSSIBLE, REPAIR OF IRRIGATION EQUIPMENT SHALL BE DONE WITH THE ORIGINALLY SPECIFIED MATERIALS OR THEIR EQUIVALENTS.

A LANDSCAPE IRRIGATION AUDIT SCHEDULE AS REQUIRED IN CHAPTER 20.09 OF TITLE 20 MAY BE RECOMMENDED. THE MAXIMUM PERIOD BETWEEN AUDITS SHALL BE FIVE YEARS.

LANDSCAPE IRRIGATION AUDIT SCHEDULES. A SCHEDULE OF LANDSCAPE IRRIGATION AUDITS OF AT LEAST EVERY FIVE YEARS MUST BE ESTABLISHED, FOR ALL BUT SINGLE-FAMILY RESIDENCES, AND OTHER PROJECTS WITH LANDSCAPE AREA LESS THAN 1 ACRE (0.405 HA). AS REQUIRED IN CHAPTER 20.09 OF TITLE 20 (UTILITY CODES), AN AUDIT SATISFYING THE FOLLOWING CONDITIONS SHALL BE SUBMITTED TO THE COUNTY AS PART OF THE LANDSCAPE DOCUMENTATION PACKAGE.

AT A MINIMUM, AUDITS SHALL BE IN ACCORDANCE WITH THE LATEST STATE OF CALIFORNIA LANDSCAPE WATER MANAGEMENT PROGRAM AS DESCRIBED IN THE LANDSCAPE IRRIGATION AUDITOR HANDBOOK, PREPARED FOR THE CALIFORNIA DEPARTMENT OF WATER RESOURCES, WATER CONSERVATION OFFICE, THE ENTIRE DOCUMENT, WHICH IS HEREBY INCORPORATED BY REFERENCE.

THE SCHEDULE SHALL PROVIDE FOR LANDSCAPE IRRIGATION AUDITS TO BE CONDUCTED BY A QUALIFIED INDIVIDUAL AS DETERMINED BY THE DIRECTOR AT LEAST ONCE EVERY FIVE YEARS IN ACCORDANCE WITH THE REQUIREMENTS OF TITLE 20, DIVISION 1 OF THE LOS ANGELES COUNTY CODE.

CONTRACTOR TO PROTECT AND PRESERVE IN PLACE ALL EXISTING SURVEY MONUMENTS. ANY MONUMENTS DISTURBED SHALL BE RESET BY A LICENSED LAND SURVEYOR AND THE APPROPRIATE CORNER RECORD MUST BE FILED WITH THE COUNTY OF LOS ANGELES.

IRRIGATION NOTES

1. ALL LOCAL MUNICIPAL AND STATE LAWS, RULES AND REGULATIONS GOVERNING OR RELATING TO ANY PORTION OF THIS WORK ARE HEREBY INCORPORATED INTO AND MADE A PART OF THESE SPECIFICATIONS AND THEIR PROVISIONS SHALL BE CARRIED OUT BY THE CONTRACTOR.
2. THE CONTRACTOR SHALL VERIFY THE LOCATIONS OF ALL EXISTING UTILITIES, STRUCTURES AND SERVICES BEFORE COMMENCING WORK. THE LOCATIONS OF UTILITIES, STRUCTURES AND SERVICES SHOWN IN THESE PLANS ARE APPROXIMATE ONLY. ANY DISCREPANCIES BETWEEN THESE PLANS AND ACTUAL FIELD CONDITIONS SHALL BE REPORTED TO THE OWNER'S REPRESENTATIVE.
3. THE CONTRACTOR SHALL OBTAIN THE PERTINENT ENGINEERING OR ARCHITECTURAL PLANS BEFORE BEGINNING WORK.
4. THE CONTRACTOR SHALL OBTAIN ALL NECESSARY PERMITS REQUIRED TO PERFORM THE WORK INDICATED HEREIN BEFORE BEGINNING WORK.
5. THIS DESIGN IS DIAGRAMMATIC. ALL EQUIPMENT SHOWN IN PAVED AREAS IS FOR DESIGN CLARITY ONLY AND IS TO BE INSTALLED WITHIN PLANTING AREAS.
6. THE CONTRACTOR SHALL NOT WILLFULLY INSTALL ANY EQUIPMENT AS SHOWN ON THE PLANS WHEN IT IS OBVIOUS IN THE FIELD THAT UNKNOWN CONDITIONS EXIST THAT WERE NOT EVIDENT AT THE TIME THESE PLANS WERE PREPARED. ANY SUCH CONDITIONS SHALL BE BROUGHT TO THE ATTENTION OF THE OWNER'S REPRESENTATIVE PRIOR TO ANY WORK OR THE IRRIGATION CONTRACTOR SHALL ASSUME ALL RESPONSIBILITY FOR ANY FIELD CHANGES DEEMED NECESSARY BY THE OWNER.
7. INSTALL ALL EQUIPMENT AS SHOWN IN THE DETAILS AND SPECIFICATIONS. CONTRACTOR SHALL BE RESPONSIBLE TO COMPLY WITH LOCAL CITY, COUNTY AND STATE REQUIREMENTS FOR BOTH EQUIPMENT AND INSTALLATION.
8. ACTUAL LOCATION FOR THE INSTALLATION OF THE BACKFLOW PREVENTER AND THE AUTOMATIC CONTROLLER IS TO BE DETERMINED IN THE FIELD BY THE OWNER'S AUTHORIZED REPRESENTATIVE.
9. CONTRACTOR IS TO PROVIDE AN ADDITIONAL PILOT WIRE FROM CONTROLLER ALONG ENTIRETY OF MAIN LINE TO THE LAST RCV ON EACH AND EVERY LEG OF MAIN LINE. LABEL SPARE WIRES AT BOTH ENDS.
10. ALL PIPE UNDER PAVED AREAS TO BE INSTALLED IN SLEEVING TWICE THE DIAMETER OF THE PIPE CARRIED. SEE LEGEND FOR TYPE. ALL WIRE UNDER PAVED AREAS TO BE INSTALLED IN A SCH. 40 SLEEVE THE SIZE REQUIRED TO EASILY PULL WIRE THROUGH. ALL SLEEVES TO BE INSTALLED WITH A MINIMUM DEPTH AS SHOWN ON THE SLEEVING DETAILS. SLEEVES TO EXTEND AT LEAST 12" PAST THE EDGE OF THE PAVING.
11. ALL QUICK COUPLER AND REMOTE CONTROL VALVES TO BE INSTALLED IN SHRUB OR GROUND COVER AREAS WHERE POSSIBLE. ALL QUICK COUPLER AND REMOTE CONTROL VALVES TO BE INSTALLED AS SHOWN ON THE INSTALLATION DETAILS. INSTALL ALL QUICK COUPLER AND REMOTE CONTROL VALVES WITHIN 18" OF HARDSCAPE.
12. ALL HEADS ARE TO BE INSTALLED WITH THE NOZZLE, SCREEN AND ARCS SHOWN ON THE PLANS. ALL HEADS ARE TO BE ADJUSTED TO PREVENT OVERSPRAY ONTO BUILDINGS, WALLS, FENCES AND HARDSCAPE. THIS INCLUDES, BUT NOT LIMITED TO, ADJUSTMENT OF DIFFUSER PIN OR ADJUSTMENT SCREW, REPLACEMENT OF PRESSURE COMPENSATING SCREENS, REPLACEMENT OF NOZZLES WITH MORE APPROPRIATE RADIUS UNITS AND THE REPLACEMENT OF NOZZLES WITH ADJUSTABLE ARC UNITS.
13. CONTRACTOR SHALL INSTALL ADDITIONAL CHECK VALVES TO HEADS AND LATERALS AS REQUIRED TO PREVENT LOW HEAD DRAINAGE.
14. THE CONTRACTOR SHALL USE PROPER GROUNDING TECHNIQUES FOR GROUNDING THE CONTROLLER AND RELATED EQUIPMENT PER MANUFACTURERS SPECIFICATIONS. SWEENEY AND ASSOCIATES RECOMMENDS MEASURING FOR PROPER GROUND AT LEAST ONCE ANNUALLY, AND NECESSARY ADJUSTMENTS MADE TO COMPLY WITH MANUFACTURER SPECIFICATIONS.
15. THE CONTRACTOR IS REQUIRED TO CONTACT DIGALERT OR 811 A MINIMUM OF TWO (2) DAYS PRIOR TO THE START OF ANY EXCAVATIONS ON THE PROJECT AND SPECIFICALLY PRIOR TO THE INSTALLATION OF ANY GROUNDING RODS. DIAL 811 OR LOG ONTO WWW.DIGALERT.ORG TO START A PROJECT TICKET. DIGALERT AND 811 IS A FREE SERVICE PROVIDED TO THE PROJECT. FAILURE TO CONTACT AND HAVE THE EXISTING UTILITIES IDENTIFIED, LOCATED AND MARKED SHALL MAKE THE CONTRACTOR SOLELY RESPONSIBLE FOR ANY AND ALL DAMAGES.

IRRIGATION MATERIAL LEGEND

SYMBOL (Q T H F)	MANUFACTURER	MODEL NO. / DESCRIPTION	FLOW RATE (GPM)	PSI	RADIUS	PR. RATE	DETAIL
	RAIN BIRD	RD-12-S-P30-F 12" POP-UP SHRUB HEAD WITH 5Q/5H NOZZLES	.10, .20	30	5 FT	1.78 IN./HR.	A
	RAIN BIRD	RD-12-S-P30-F 12" POP-UP SHRUB HEAD WITH 8 SERIES HE-VAN ADJUSTABLE ARC NOZZLE	.29, .39, .59, 1.17	30	8 FT	2.03 IN./HR.	A
	RAIN BIRD	RD-12-S-P30-F 12" POP-UP SHRUB HEAD WITH 10 SERIES HE-VAN ADJUSTABLE ARC NOZZLE	.45, .59, .89, 1.78	30	10 FT	1.98 IN./HR.	A
	RAIN BIRD	RD-12-S-P30-F 12" POP-UP SHRUB HEAD WITH 12 SERIES HE-VAN ADJUSTABLE ARC NOZZLE	.59, .79, 1.18, 2.37	30	12 FT	1.83 IN./HR.	A
	RAIN BIRD	RD-12-S-P30-F 12" POP-UP SHRUB HEAD WITH 15 SERIES HE-VAN ADJUSTABLE ARC NOZZLE	.93, 1.23, 1.85, 3.70	30	15 FT	1.83 IN./HR.	A
	RAIN BIRD	RD-06-S-P30-F 6" POP-UP BUBBLER HEAD WITH A HUNTER MSBN-50Q STREAM BUBBLER NOZZLE EACH SYMBOL REPRESENTS TWO (2) BUBBLER TO PROVIDE A TOTAL OF TWO (2) BUBBLERS PER TREE. PLACE THE BUBBLER HEADS SIX (6) INCHES FROM THE ROOT BALL OF THE TREE AND ON OPPOSITE SIDES OF TREE. ADJUST BUBBLER STREAMS TO WET THE ROOT BALL AND ADJACENT AMENDED SOIL WITHOUT HITTING THE TRUNK OF THE TREE.	.50 (1.00 TOTAL)	30	1.5 FT	1.50 IN./HR.	A,B
NO SYMBOL	RAIN BIRD	SPRINKLER HEADS WITH 1/2" NPT INLETS SHALL BE INSTALLED WITH A SA-125050 POLY SWING JOINT AS PART OF THE ASSEMBLY					A
	GPH	GIH-12-BR 1/2" FLEXIBLE PVC RISER 12" LONG W/ GPST-1-D 2GPH EMITTER - DESERT CAMO EACH SYMBOL REPRESENTS 1 EMITTER PER 1 GALLONG SHRUB, 2 EMITTERS PER 5 GALLON SHRUB, AND 3 EMITTERS PER 15 GALLON. PLACE EMITTERS AT EDGE OF ROOTBALL TYPICAL	0.033 (2GPH)	30	N/A	N/A	C
10	RAIN BIRD	6504-SS 4" POP-UP LARGE RADIUS TURF ROTOR WITH A S.S. STEM AND A #04 NOZZLE	3.3	40	41 FT	1.52 IN./HR. (Q) 0.76 IN./HR. (H) 0.38 IN./HR. (F)	O
M	P.O.C.	X" EXISTING POTABLE (DOMESTIC) DEDICATED IRRIGATION WATER METER WITH X" SERVICE LINE. VERIFY SIZE, LOCATION AND PRESSURE IN FIELD.					N/A
B	WILKINS	EXISTING X" R/P BACK FLOW PREVENTION DEVICE, PROTECT IN PLACE.					N/A
V	BERMAD	900 SERIES 2" NORMALLY OPEN, COMBINATION MASTER CONTROL VALVE / FLOW SENSOR AS PART OF CONTROLLER ASSEMBLY. WIRE MCV TO THE CONTROLLER USING A SEPARATE PILOT AND GROUND WIRE, ROUTE INSIDE A 1" SCH. 40 PVC (GRAY) ELECTRICAL CONDUIT. INSTALL INSIDE A STANDARD RECTANGULAR CONCRETE VALVE BOX.					D
	MATCO-NORCO	759LF 2" BRASS, BALL VALVE WITH FIPT CONNECTIONS, LINE SIZE PER MAINLINE. INSTALL INSIDE A STANDARD RECTANGULAR CONCRETE VALVE BOX.					E
	RAIN BIRD	44LRC 1" QUICK COUPLER VALVE WITH LOCKING VINYL COVER AND A HARCO 879-15-10 G13S-218 SWING JOINT. INSTALL INSIDE A STANDARD RECTANGULAR CONCRETE VALVE BOX.					F
	RAIN BIRD	1X0-EFB-CP-PRS-D PRESSURE REGULATING, BRASS REMOTE CONTROL VALVE (RCV), SIZE AS SHOWN (1" AND 1 1/2" SIZES), SET PRS-D PRESSURE REGULATOR TO PROVIDE THE OPERATING PRESSURE OF THE SPRINKLER / BUBBLER HEAD AT THE HIGHEST OR FARTHEST HEAD ON THE CONTROL VALVE ZONE (MEASURE PSI AT HEAD). INSTALL THE RCV INSIDE A STANDARD RECTANGULAR CONCRETE VALVE BOX.					G
	RAIN BIRD	100-EFB-CP BRASS DRIP REMOTE CONTROL VALVE, SIZE AS SHOWN (1" SIZE). INSTALL A RAIN BIRDPRB-QKCHK-100 PRESSURE REGULATING, 200 MESH BASKET FILTER DOWNSTREAM SIDE OF EACH DRIP REMOTE CONTROL VALVE (DRCV). INSTALL THE DRCV ASSEMBLY INSIDE A STANDARD RECTANGULAR CONCRETE VALVE BOX.					H
C	I.T.S / RAIN BIRD	IMPERIAL TECHNICAL SERVICES RAIN BIRD LXMEF 48 STATION CONTROLLER ASSEMBLY, MOD. #ICA6-RB3-48/SP/IQ-GPRS-5/RSE/FSV-200B, CONTACT DARYL GREEN @ 949.584.7311 AT IMPERIAL TECHNICAL SERVICES					I
NO SYMBOL	PAIGE ELECTRIC	THE CONTROLLER SHALL BE GROUNDED USING A #182000 5/8" X 8 FOOT COPPER CLAD GROUND ROD, A #182005 CAST BRONZE ROD CLAMP AND THE REQUIRED LENGTH OF #6AWG BARE, SINGLE STRAND COPPER GROUND WIRE. INSTALL INSIDE A 10" ROUND VALVE BOX.					J
R	RAIN BIRD	RSD-BEx WIRED RAIN SENSOR AS PART OF CONTROLLER ASSEMBLY, MOUNT IN RGVRSS ENCLOSURE ON THE SIDE OF THE CONTROLLER ENCLOSURE, WIRE TO THE CONTROLLER.					I
E	N/A	120 VOLT ELECTRICAL POWER FOR CONTROLLER, PROVIDED BY ELECTRICIAN, VERIFY ACTUAL LOCATION IN FIELD					N/A
	AS APPROVED	PVC PIPE 3/4" - 1 1/2" SCH. 40, SOLVENT WELD WITH SCH. 40 PVC FITTINGS, AS LATERAL LINES INSTALLED 12" BELOW FINISHED GRADE					K
	AS APPROVED	PVC PIPE 2" CL. 315, SOLVENT WELD WITH SCH. 80 PVC FITTINGS, AS MAINLINES INSTALLED 24" BELOW FINISHED GRADE					K
EX	AS APPROVED	EXISTING IRRIGATION MAINLINE, PROTECT IN PLACE					N/A
	AS APPROVED	PVC PIPE SCH. 40 AS SLEEVING, TWICE THE DIAMETER OF PIPE OR WIRE BUNDLE CARRIED (2" MINIMUM SIZE) INSTALL ALL PIPE AND WIRE UNDER PAVING, HARDSCAPE, ETC. (OR AS DIRECTED BY OWNER'S AUTHORIZED REPRESENTATIVE) INSIDE SLEEVES. SLEEVES UNDER PEDESTRIAN PAVING SHALL BE INSTALLED 24" BELOW FINISHED GRADE. SLEEVES UNDER VEHICULAR PAVING SHALL BE INSTALLED 36" BELOW FINISHED GRADE.					L
NO SYMBOL	LASCO	ALL FITTINGS USED WITH SOLVENT WELD MAINLINE PIPE SHALL BE SCH. 80 PVC FITTINGS, GRAY IN COLOR, AND SIZED TO MATCH THE MAINLINE PIPE. ALL FITTINGS USED WITH SOLVENT WELD LATERAL LINE PIPE SHALL BE SCH. 40 PVC, WHITE IN COLOR, AND SIZED TO MATCH THE LATERAL LINE PIPE. ALL THREADED PVC NIPPLES SHALL BE SCH. 80 PVC PIPE, DARK GRAY IN COLOR, WITH MOLDED THREADS.					N/A
NO SYMBOL	WELD-ON	ALL SOLVENT WELD CONNECTIONS FOR BOTH MAINLINE AND LATERAL LINE SHALL BE MADE USING THE TWO-STEP PROCESS OF PRIMER AND SOLVENT CEMENT. PRIMER SHALL BE P-70 LOW VOC "PURPLE PRIMER". SOLVENT CEMENT SHALL BE 711 LOW VOC, GRAY COLORED "HEAVY BODIED" CEMENT. USE DAUBERS SIZED AT LEAST ONE-HALF THE SIZE OF THE LARGEST PIPE BEING JOINED. ALL SOLVENT CEMENTED JOINTS SHALL BE MADE PER THE PIPE AND FITTING MANUFACTURER'S RECOMMENDATIONS.					N/A
NO SYMBOL	AS APPROVED	11/4" SCH. 40 PVC, GRAY ELECTRICAL CONDUIT FOR FLOW SENSOR / MASTER VALVE WIRES AND CONTROL WIRES, PROVIDE PULL BOX AT A MAXIMUM OF 200 FEET ON CENTER FOR A 3 FOOT WIRE LOOP OR ANY SPLICES. INSTALL INSIDE A STANDARD RECTANGULAR VALVE BOX.					N/A
NO SYMBOL	PAIGE ELECTRIC	P7079D POLYETHYLENE INSULATED, SOLID COPPER CONDUCTOR IRRIGATION CONTROL WIRE #14UF AWG DIRECT BURIAL (U.L. APPROVED). PILOT WIRES SHALL BE RED IN COLOR, COMMON GROUND WIRE SHALL BE WHITE IN COLOR, SPARE WIRES SHALL BE YELLOW IN COLOR. THE CONTRACTOR SHALL ROUTE TWO (2) SPARE CONTROL WIRES (YELLOW) FROM THE CONTROLLER ALONG THE MAINLINE IN ALL DIRECTIONS AWAY FROM THE CONTROLLER. LOOP SPARE WIRES UP AND INTO EACH VALVE BOX ALONG THE MAINLINE, PROVIDING A 3 FOOT MINIMUM LOOP. WHERE MULTIPLE CONTROLLERS ARE USED ON THE PROJECT, EACH CONTROLLER SHALL HAVE A DIFFERENT COLOR FOR PILOT WIRES.					K,L,M
NO SYMBOL	3M	DBRY6 DIRECT BURIAL, 100% SILICONE GEL, WATER-PROOF WIRE CONNECTORS FOR USE ON ALL WIRE SPLICES AND CONNECTIONS					M
NO SYMBOL	NDS (K.B.I.)	KSC-XXX-S SWING CHECK VALVE, LATERAL LINE SIZE, INSTALL ONE (1) ON THE DOWNSTREAM SIDE OF EACH RCV WHEN THE RCV IS LOWER THAN THE SPRINKLERS, BUBBLERS OR DRIP EMITTERS. INSTALL WITHIN SPRINKLER / BUBBLER / DRIP ZONES AS REQUIRED TO PREVENT LOW HEAD DRAINAGE.					N/A
NO SYMBOL	NDS (K.B.I.)	KC-XXX-S SPRING CHECK VALVE, LATERAL LINE SIZE, INSTALL ONE (1) ON THE DOWNSTREAM SIDE OF EACH RCV WHEN THE RCV IS HIGHER THAN THE SPRINKLERS, BUBBLERS OR DRIP EMITTERS. INSTALL WITHIN SPRINKLER / BUBBLER / DRIP ZONES AS REQUIRED TO PREVENT LOW HEAD DRAINAGE.					N/A
NO SYMBOL	EISEL	FOR VALVE BOXES WITHIN PUBLIC RIGHT OF WAY AREAS USE CONCRETE VALVE BOXES WITH HINGED LOCKING CAST IRON LIDS. FOR USE IN NON-VEHICULAR TRAFFIC SITUATIONS ONLY. DO NOT INSTALL IN CONCRETE OR ASPHALT.					N

DESCRIPTION	MODEL #
STANDARD RECTANGULAR BOXES	W3HLC (CONCRETE BOX W/ HINGED LOCKING IRON COVER)

VALVE CALLOUT LEGEND

A20	1"	35	30
HZ1	DT	0.70	1,500

- CONTROLLER LETTER / STATION NUMBER
- VALVE SIZE IN INCHES
- VALVE FLOW RATE IN G.P.M.
- OPERATING PRESSURE (PSI)
- ZONE AREA (SFT)
- ZONE PRECIPITATION RATE (IN./HR.)
- IRRIGATION METHOD SEE CHART
- HYDROZONE NUMBER SEE CHART

FOR DRIP TUBING ZONES

1,750' TUBING — LENGTH OF DRIP TUBING

HYDROZONE DESCRIPTION CHART

NUMBER	DESCRIPTION OF THE HYDROZONE	WUCOLS	PLANT FACTOR
HZ 1	LOW WATER USE PLANTINGS	L	0.30
HZ 2	MODERATE WATER USE PLANTINGS	M	0.40
HZ 3	LOW WATER USE TREES	L	0.30
HZ 4	MODERATE WATER USE TREES	M	0.40

IRRIGATION METHOD DESCRIPTION CHART

LETTERS	DESCRIPTION OF THE IRRIGATION	TYPE	IR. EFFICIENCY
S	SPRAY HEADS	SPRAY	0.75
DE	DRIP EMITTERS	DRIP	0.81
TB	TREE BUBBLERS	DRIP	0.81
R	ROTOR HEADS	SPRAY	0.75

1

WATER EFFICIENT LANDSCAPE WORKSHEET

This worksheet is filled out by the project applicant and it is a required element of the Landscape Documentation Package

Project Name: Altadena ES (PUSD)

Project Address: Pasadena, California 91104

sweeney + associates — IRRIGATION DESIGN AND CONSULTING

Reference Evapotranspiration (ETo) 50.1 In./Yr. **Residential Project?** No

Hydrozone # / Planting Description[a]	Plant Factor	Irrigation Method[b]	Irrigation Efficiency (IE)[c]	ETAF (PF / IE)	Landscape Area (Sq. Ft.)	ETAF x Area	Estimated Total Water Use (ETWU)[d]
Regular Landscape Areas							
1. Low Water Use Plantings	0.30	Overhead / Drip	0.75	0.40	11,278	4,511	140,127
2. Moderate Water Use Plantings	0.40	Overhead / Drip	0.75	0.54	10,560	5,702	177,128
3. High Water Use Turf (SLA See Below)	0.80	Overhead	0.81	0.99	0	0	0
4. Low Water Use Trees	0.30	Bubblers	0.81	0.38	8,875	3,373	104,757
5. Medium Water Use Trees	0.40	Bubblers	0.81	0.50	3,500	1,750	54,359
				Totals:	**34,213**	**15,336**	
Special Landscape Areas							
3. Active Turf				1.00	10,856	10,856	337,209
				Totals:	**10,856**	**10,856**	
		Estimated Total Water Use (ETWU) Total:					**813,579**
		Maximum Applied Water Allowance (MAWA)[e]:					**815,435**

[a] Hydrozone # / Planting Description	[b] Irrigation Method	[c] Irrigation Efficiency
E.g.	*Overhead Spray of*	*0.75 for Spray*
1.) Front Lawn	*Drip*	*0.81 for Drip*
2.) Low Water Use Plantings		
3.) Medium Water Use Plantings		

***[d] ETWU (Annual Gallons Required) =** ETo x 0.62 x ETAF x Area*

Where 0.62 is a conversion factor that converts acre-inches/acre/year to gallons/square foot/year.

***[e] MAWA (Annual Gallons Allowed) =** ETo x 0.62 x [(ETAF x LA) + ((1 - ETAF) x SLA)]*

Where 0.62 is a conversion factor that converts acre-inches/acre/year to gallons/square foot/year, LA is the total landscape area in square feet, SLA is the total special landscape area in square feet, and ETAF is 0.55 for residential projects and 0.45 for non-residential projects.

Evapotranspiration Adjustment Factor (ETAF) Calculations

This non-residential project complies with the WELO and its average ETAF is less than 0.45

Regular Landscape Areas (Excludes Special Landscape Areas)	
Total ETAF x Area	15,336
Total Area	34,213
Average ETAF	**0.45**

All Landscape Areas (Includes Special Landscape Areas)	
Total ETAF x Area	26,192
Total Area	45,069
Average ETAF	**0.58**

IRRIGATION CONTROLLER RUN TIMES

POC or Controller: **A**

				JAN	FEB	MAR	APR	MAY	JUN	JUL	AUG	SEP	OCT	NOV	DEC	Total / Avg.
ETo / Month (Inches):				2.20	2.70	3.70	4.70	5.50	5.80	6.20	5.90	5.00	3.90	2.60	1.90	**50.10**
ETo / Day (Inches):				0.07	0.10	0.12	0.16	0.18	0.19	0.20	0.19	0.17	0.13	0.09	0.06	**0.14**
Irrigation Days / Week:				3	3	4	4	4	5	5	5	4	4	3	3	
Plant / Irrig. Type	**AKc**	**Pr Rate**	**IE**	**JAN**	**FEB**	**MAR**	**APR**	**MAY**	**JUN**	**JUL**	**AUG**	**SEP**	**OCT**	**NOV**	**DEC**	
Low Water Use Plantings	0.30	0.49	0.81	7.5	10.2	9.5	12.4	14.1	12.3	12.7	12.1	13.2	10.0	9.2	6.5	Min./Day/Zone
Drip Emitters	Number of Zones:		9	**67.6**	**91.8**	**85.3**	**111.9**	**126.7**	**110.5**	**114.3**	**108.8**	**119.0**	**89.9**	**82.5**	**58.4**	**Total Min./Day**
Low Water Use Plantings	0.30	1.83	0.75	2.2	3.0	2.7	3.6	4.1	3.5	3.7	3.5	3.8	2.9	2.7	1.9	Min./Day/Zone
Spray	Number of Zones:		3	**6.5**	**8.9**	**8.2**	**10.8**	**12.2**	**10.6**	**11.0**	**10.5**	**11.5**	**8.7**	**8.0**	**5.6**	**Total Min./Day**
Moderate Water Use Plantings	0.40	0.49	0.81	10.0	13.6	12.6	16.6	18.8	16.4	16.9	16.1	17.6	13.3	12.2	8.6	Min./Day/Zone
Drip Emitters	Number of Zones:		5	**50.1**	**68.0**	**63.2**	**82.9**	**93.9**	**81.8**	**84.7**	**80.6**	**88.2**	**66.6**	**61.1**	**43.2**	**Total Min./Day**
Moderate Water Use Plantings	0.40	1.83	0.75	2.9	3.9	3.7	4.8	5.4	4.7	4.9	4.7	5.1	3.8	3.5	2.5	Min./Day/Zone
Spray	Number of Zones:		7	**20.3**	**27.5**	**25.6**	**33.6**	**38.0**	**33.1**	**34.3**	**32.6**	**35.7**	**26.9**	**24.8**	**17.5**	**Total Min./Day**
High Water Use Turf	0.30	1.52	0.75	2.6	3.6	3.3	4.3	4.9	4.3	4.4	4.2	4.6	3.5	3.2	2.3	Min./Day/Zone
6504 ROTOR (Q)	Number of Zones:		1	**2.6**	**3.6**	**3.3**	**4.3**	**4.9**	**4.3**	**4.4**	**4.2**	**4.6**	**3.5**	**3.2**	**2.3**	**Total Min./Day**
High Water Use Turf	0.40	0.76	0.75	7.0	9.5	8.8	11.5	13.1	11.4	11.8	11.2	12.3	9.3	8.5	6.0	Min./Day/Zone
6504 ROTOR (H)	Number of Zones:		1	**7.0**	**9.5**	**8.8**	**11.5**	**13.1**	**11.4**	**11.8**	**11.2**	**12.3**	**9.3**	**8.5**	**6.0**	**Total Min./Day**
High Water Use Turf	0.40	0.38	0.75	13.9	18.9	17.6	23.1	26.1	22.8	23.6	22.4	24.6	18.5	17.0	12.0	Min./Day/Zone
6504 ROTOR (F)	Number of Zones:		1	**13.9**	**18.9**	**17.6**	**23.1**	**26.1**	**22.8**	**23.6**	**22.4**	**24.6**	**18.5**	**17.0**	**12.0**	**Total Min./Day**
Low Water Use Trees	0.30	1.50	0.81	2.5	3.3	3.1	4.1	4.6	4.0	4.1	3.9	4.3	3.3	3.0	2.1	Min./Day/Zone
Bubblers	Number of Zones:		7	**17.2**	**23.3**	**21.7**	**28.4**	**32.2**	**28.1**	**29.0**	**27.6**	**30.2**	**22.8**	**21.0**	**14.8**	**Total Min./Day**
Moderate Water Use Trees	0.40	1.50	0.81	3.3	4.4	4.1	5.4	6.1	5.3	5.5	5.3	5.8	4.3	4.0	2.8	Min./Day/Zone
Bubblers	Number of Zones:		3	**9.8**	**13.3**	**12.4**	**16.2**	**18.4**	**16.0**	**16.6**	**15.8**	**17.3**	**13.0**	**12.0**	**8.5**	**Total Min./Day**
Total Number of Zones:			**37**	195	265	246	323	366	319	330	314	343	259	238	168	Total Min./Day
Total Controller Run Time in Hours:				**3.25**	**4.41**	**4.10**	**5.38**	**6.09**	**5.31**	**5.49**	**5.23**	**5.72**	**4.32**	**3.97**	**2.81**	**Total Hrs./Day**
				JAN	**FEB**	**MAR**	**APR**	**MAY**	**JUN**	**JUL**	**AUG**	**SEP**	**OCT**	**NOV**	**DEC**	

Note: **These schedules are intended only for compliance with local municipal codes and the water efficient landscape ordinance. These calculations represent the MAXIMUM REASONABLE run times and are used to ensure that all irrigation may be completed during the specific watering window allowed. These schedules do not include rainfall, site soil types, specific exposures (shade versus sun), actual irrigation days, or specific slope position. It is solely the responsibility of the irrigation contractor to program the controller as required to apply the correct amount of irrigation water for the landscape. All smart controllers shall be programmed using the specified ET or weather sensing equipment, satellite provided ET data, soil moisture sensors, and rain shut off devices as required. Contractor shall provide a controller schedule inside the controller cabinet prior to final turnover of the project to the owner.**

1

I HAVE COMPLIED WITH THE CRITERIA OF THE IRRIGATION GUIDELINES AND APPLIED THEM ACCORDINGLY FOR THE EFFICIENT USE OF WATER IN THE IRRIGATION DESIGN PLAN

sweeney + associates
IRRIGATION DESIGN AND CONSULTING
38730 Sky Canyon Drive, Suite C
Murrieta, Ca 92563
e: info@sweeneyassoc.com | t: (951) 461-6830
w: www.sweeneyassoc.com | f: (951) 461-6850

LPA
ARCHITECTURE ENGINEERING INTERIOR DESIGN LANDSCAPE ARCHITECTURE PLANNING
949-261-1001 Office
LPADesignStudios.com
5301 California Avenue, Suite 100
Irvine, California 92617

LICENSED LANDSCAPE ARCHITECT JEFFREY K. YAMAMOTO 5030 SIGNATURE 07/31/2027 RENEWAL DATE STATE OF CALIFORNIA

THE JOBSON FAMILY FOUNDATION
CONCEPT DESIGN:
Landscape Architect
Helle Nebelong
Denmark
hellenebelong.com

This document and all other project documents, ideas, aesthetics and designs incorporated therein are instruments of service. All project documents are copyright protected, are the property of LPA, Inc. (LPA) and cannot be lawfully used in whole or in part for any project or purpose except as set forth in the contractual agreement between LPA and its Client. The unauthorized disclosure and/or use of the project documents (including the creation of derivative works), may give rise to liability for copyright infringement, unlawful disclosure, use or misappropriation of property rights held by LPA. The unauthorized use of the project documents will give rise to the recovery of monetary losses and damages including attorney fees and costs for which the unauthorized user will be held liable.
Project documents describe the design intent of the work and are not a representation of as-built or existing conditions. LPA is not responsible for any discrepancies between the project documents and the existing conditions.

© LPA, Inc.

ALTADENA ARTS MAGNET SCHOOL

743 E CALAVERAS ST.
ALTADENA, CA 91001

Developed for
PASADENA UNIFIED SCHOOL DISTRICT

Revision	Date
Addendum 1	04/17/2026

Submittal	Date
100% SCHEMATIC DESIGN	12/05/2025
DSA SUBMITTAL	02/02/2026
DSA SUBMITTAL V2	03/13/2026

Job Number	33366
Checked By	AG /SC
Scale	N.T.S.

IRRIGATION LEGEND & NOTES

L6.02

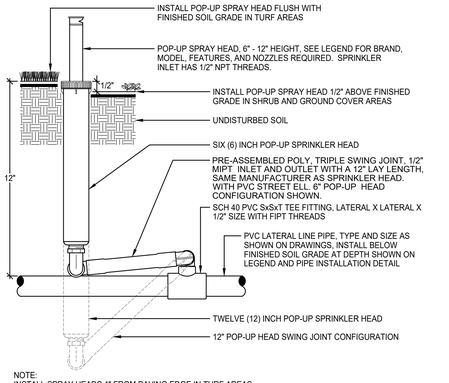

NOTE:
INSTALL SPRAY HEADS 4" FROM PAVING EDGE IN TURF AREAS.
INSTALL SPRAY HEADS 6" FROM PAVING EDGE IN SHRUB AND GROUND COVER AREAS.
INSTALL SPRAY HEADS 12" FROM THE FACE OF BUILDING WALLS OR WINDOWS.

INSTALL SPRAY HEADS PLUMB. ADJUST NOZZLE STREAM TO COVER THE LANDSCAPE AREA WITHOUT OVERSPRAY ONTO PAVING, FENCES, WALLS OR BUILDINGS.

SECTION VIEW - N.T.S.

©copyright 2019 Sweeney & Associates, Inc.

(A) POP-UP SPRINKLER HEAD

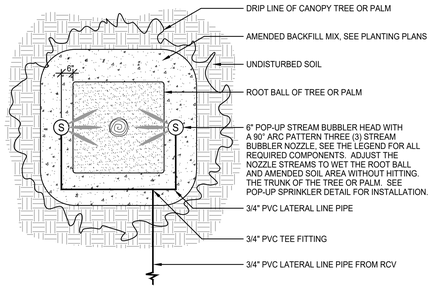

NOTE:
POSITION MSBN-50Q STREAM BUBBLER HEADS 6" FROM THE ROOT BALL.
POSITION MSBN-25Q STREAM BUBBLER HEADS 1" FROM THE ROOT BALL.

PLAN VIEW - N.T.S.

©copyright 2019 Sweeney & Associates, Inc.

(B) TREE BUBBLER LAYOUT

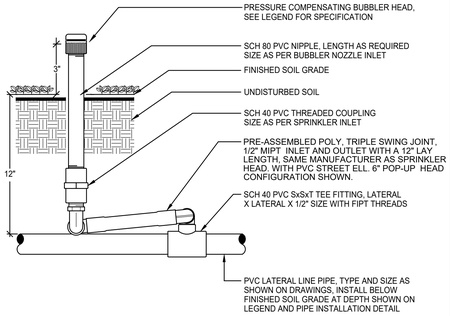

NOTE:
INSTALL BUBBLERS PLUMB AND 12" FROM FACE OF FENCES, PAVING, WALLS OR BUILDINGS.

SECTION VIEW - N.T.S.

©copyright 2019 Sweeney & Associates, Inc.

(C) SHRUB BUBBLER ON RISER

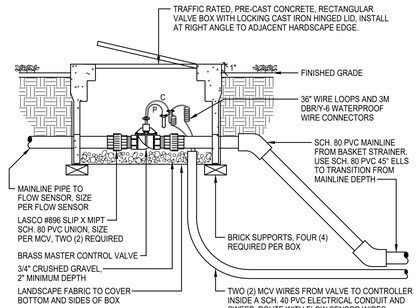

NOTE:
USE AN APPROVED, NON-HARDENING, TEFLON ASSEMBLY PASTE ON ALL THREADED FITTINGS.
USE STANDARD BOX OPENINGS FOR ALL PIPING INTO THE BOX, DO NOT CUT THE BOX.

SECTION VIEW - N.T.S.

©copyright 2019 Sweeney & Associates, Inc.

(D) COMBINATION MASTER VALVE / FLOW SENSOR VALVE IN CONCRETE BOX

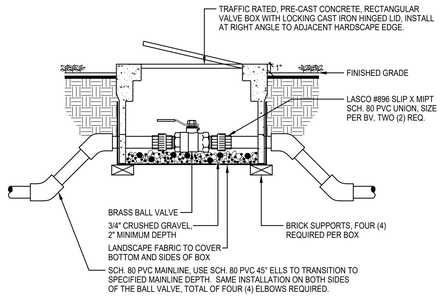

NOTE:
USE AN APPROVED, NON-HARDENING, TEFLON ASSEMBLY PASTE ON ALL THREADED FITTINGS.
USE STANDARD BOX OPENINGS FOR ALL PIPING INTO THE BOX, DO NOT CUT THE BOX.

SECTION VIEW - N.T.S.

©copyright 2019 Sweeney & Associates, Inc.

(E) BALL VALVE IN CONCRETE BOX

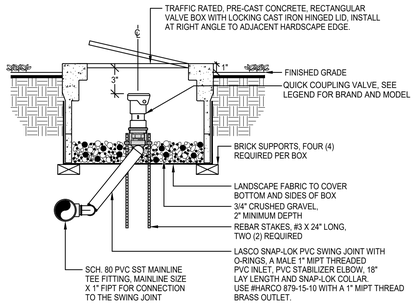

NOTE:
USE AN APPROVED, NON-HARDENING, TEFLON ASSEMBLY PASTE ON ALL THREADED FITTINGS.
USE STANDARD BOX OPENINGS FOR ALL PIPING INTO THE BOX, DO NOT CUT THE BOX.

SECTION VIEW - N.T.S.

©copyright 2019 Sweeney & Associates, Inc.

(F) QUICK COUPLER VALVE IN CONCRETE BOX

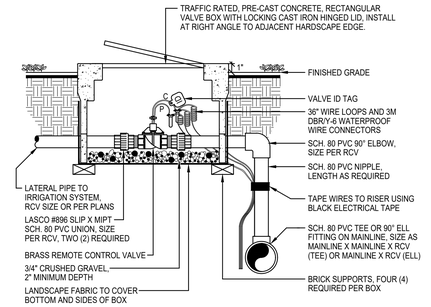

NOTE:
USE AN APPROVED, NON-HARDENING, TEFLON ASSEMBLY PASTE ON ALL THREADED FITTINGS.
USE STANDARD BOX OPENINGS FOR ALL PIPING INTO THE BOX, DO NOT CUT THE BOX.

SECTION VIEW - N.T.S.

©copyright 2019 Sweeney & Associates, Inc.

(G) REMOTE CONTROL VALVE IN CONCRETE BOX

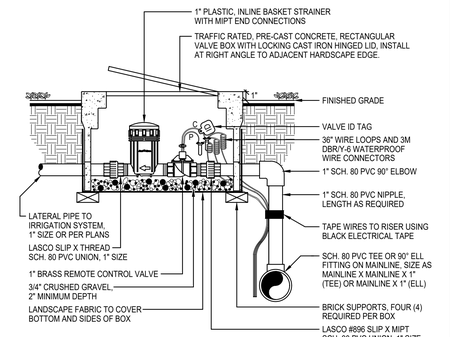

NOTE:
USE AN APPROVED, NON-HARDENING, TEFLON ASSEMBLY PASTE ON ALL THREADED FITTINGS.
USE STANDARD BOX OPENINGS FOR ALL PIPING INTO THE BOX, DO NOT CUT THE BOX.

SECTION VIEW - N.T.S.

©copyright 2017 Sweeney & Associates, Inc.

(H) DRIP REMOTE CONTROL VALVE IN CONCRETE BOX

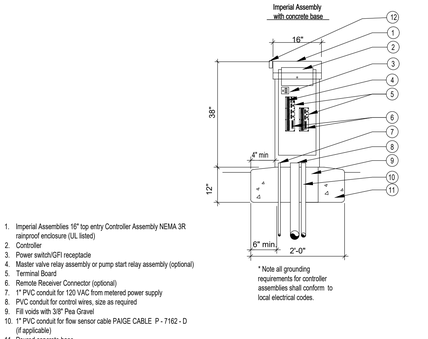

1. Imperial Assemblies 16" top entry Controller Assembly NEMA 3R rainproof enclosure (UL listed)
2. Controller
3. Power switch/GFI receptacle
4. Master valve relay assembly or pump start relay assembly (optional)
5. Terminal Board
6. Remote Receiver Connector (optional)
7. 1" PVC conduit for 120 VAC from metered power supply
8. PVC conduit for control wires, size as required
9. Fill voids with 3/8" Pea Gravel
10. 1" PVC conduit for flow sensor cable PAIGE CABLE P - 7162 - D (if applicable)
11. Poured concrete base
12. Rain Sensor - Enclosure Mounted

* Note all grounding requirements for controller assemblies shall conform to local electrical codes.

16" x 16" Top Entry Controller Assembly (ICA6 Series)

ICA6.DWG

1

IMPERIAL TECHNICAL SERVICES

(I) CONTROLLER ASSEMBLY

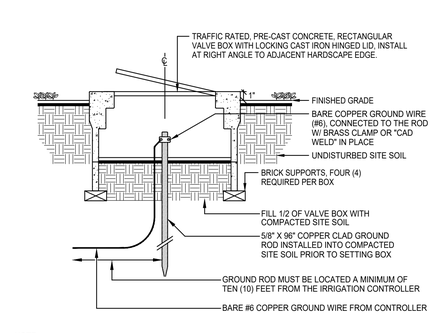

NOTE:
CONTRACTOR IS REQUIRED TO CONTACT 811 OR DIGALERT A MINIMUM OF TWO (2) DAYS PRIOR TO ANY EXCAVATION ON THE PROJECT AND SPECIFICALLY PRIOR TO THE INSTALLATION OF ANY GROUNDING RODS. DIAL 811 OR LOG ONTO WWW.DIGALERT.ORG.

EACH CONTROLLER SHALL HAVE A MINIMUM OF ONE (1) GROUND ROD INSTALLED.

GROUND ROD SHALL BE INSTALLED A MINIMUM OF TEN (10) FEET AWAY FROM THE IRRIGATION CONTROLLER OR ANY CONTROL WIRE PATH.

SECTION VIEW - N.T.S.

©copyright 2019 Sweeney & Associates, Inc.

(J) GROUNDING ROD IN CONCRETE BOX

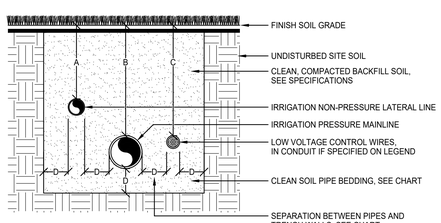

PIPE SIZES	A	B	C	D
SIZES 3/4" TO 2 1/2"	12"	24"	18"	4"
SIZES 3" AND 4"	18"	24"	24"	4"
SIZES 6" AND LARGER		30"	24"	6"

NOTE:
CONTRACTOR IS REQUIRED TO CONTACT 811 OR DIGALERT A MINIMUM OF TWO (2) DAYS PRIOR TO ANY EXCAVATION ON THE PROJECT. DIAL 811 OR LOG ONTO WWW.DIGALERT.ORG.

SECTION VIEW - N.T.S.

©copyright 2019 Sweeney & Associates, Inc.

(K) PIPE INSTALLATION

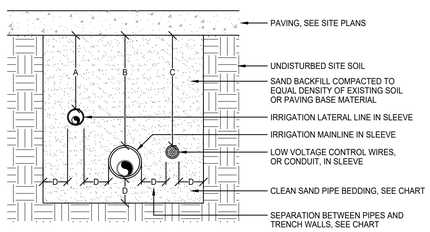

PIPE SIZES	A	B	C	D
UNDER PEDESTRIAN PAVING	12"	24"	24"	4"
UNDER VEHICULAR PAVING	24"	36"	36"	6"

NOTE:
CONTRACTOR IS REQUIRED TO CONTACT 811 OR DIGALERT A MINIMUM OF TWO (2) DAYS PRIOR TO ANY EXCAVATION ON THE PROJECT. DIAL 811 OR LOG ONTO WWW.DIGALERT.ORG.

SLEEVES SHALL BE TWICE THE DIAMETER OF THE PIPE OR WIRE BUNDLE CARRIED WITHIN, EXCEPT WHEN USING BELL AND GASKET PIPING WHERE MAINLINE SLEEVES SHALL BE 2.5 TIMES THE SIZE OF THE PIPE.

SLEEVES SHALL EXTEND 12" PAST THE EDGE OF PAVING INTO THE PLANTER.

SECTION VIEW - N.T.S.

©copyright 2019 Sweeney & Associates, Inc.

(L) SLEEVE INSTALLATION

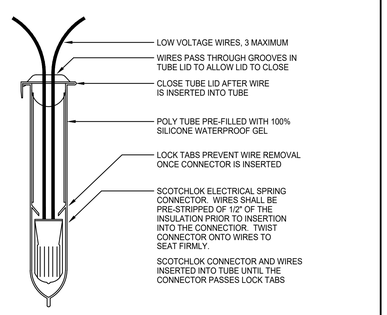

NOTE:
WIRE CONNECTOR SHALL BE A GPH IRRIGATION GDBRY6 DIRECT BURY SPLICE KIT.

KIT SHALL INCLUDE A SCOTCHLOK SPRING CONNECTOR, A POLYPROPYLENE TUBE AND A 100% SILICONE WATERPROOF SEALING GEL. TUBE SHALL BE SUPPLIED PRE-FILLED WITH GEL.

SECTION VIEW - N.T.S.

©copyright 2017 Sweeney & Associates, Inc.

(M) WIRE CONNECTION

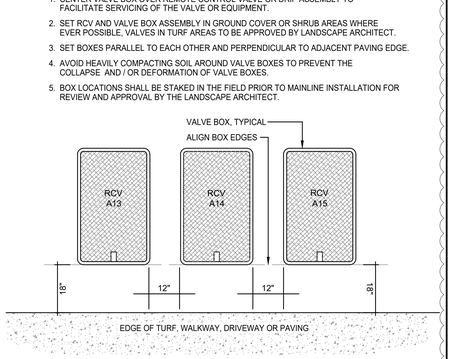

NOTE:
VALVE BOXES SHALL BE INSTALLED IN SHRUB AND GROUND COVER AREAS. NO VALVES SHALL BE INSTALLED IN TURF AREAS WITHOUT PRIOR APPROVAL BY THE LANDSCAPE ARCHITECT.

PLAN VIEW - N.T.S.

©copyright 2014 Sweeney & Associates, Inc.

(N) VALVE BOX LAYOUT

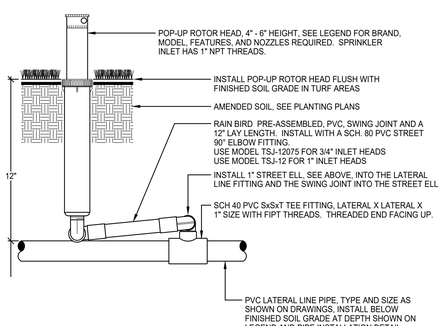

NOTE:
INSTALL ROTOR HEADS 4" FROM PAVING EDGE IN TURF AREAS.

INSTALL ROTOR HEADS PLUMB. ADJUST NOZZLE STREAM TO COVER THE LANDSCAPE AREA WITHOUT OVERSPRAY ONTO PAVING, FENCES, WALLS OR BUILDINGS.

SECTION VIEW - N.T.S.

©copyright 2019 Sweeney & Associates, Inc.

(O) LARGE TURF POP-UP ROTOR HEAD

1

I HAVE COMPLIED WITH THE CRITERIA OF THE IRRIGATION GUIDELINES AND APPLIED THEM ACCORDINGLY FOR THE EFFICIENT USE OF WATER IN THE IRRIGATION DESIGN PLAN

sweeney + associates
IRRIGATION DESIGN AND CONSULTING
38730 Sky Canyon Drive, Suite C
Murrieta, Ca 92563
e: info@sweeneyassoc.com t: (951) 461-6830
w: www.sweeneyassoc.com f: (951) 461-6830

LPA
ARCHITECTURE ENGINEERING INTERIOR DESIGN
LANDSCAPE ARCHITECTURE PLANNING
949-261-1001 Office
LPADesignStudios.com
5301 California Avenue, Suite 100
Irvine, California 92617

THE JOBSON FAMILY FOUNDATION

CONCEPT DESIGN:
Landscape Architect
Helle Nebelong
Denmark
hellenebelong.com

This document and all other project documents, ideas, aesthetics and designs incorporated therein are instruments of service. All project documents are copyright protected, are the property of LPA, Inc. (LPA) and cannot be lawfully used in whole or in part for any project or purpose except as set forth in the contractual agreement between LPA and its Client. The unauthorized disclosure and/or use of the project documents (including the creation of derivative works), may give rise to liability for copyright infringement, unlawful disclosure, use or misappropriation of property rights held by LPA. The unauthorized use of the project documents will give rise to the recovery of monetary losses and damages including attorney fees and costs for which the unauthorized user will be held liable.
Project documents describe the design intent of the work and are not a representation of as-built or existing conditions. LPA is not responsible for any discrepancies between the project documents and the existing conditions.

© LPA, Inc.

ALTADENA ARTS MAGNET SCHOOL

743 E CALAVERAS ST.
ALTADENA, CA 91001

Developed for
PASADENA UNIFIED SCHOOL DISTRICT

Revision	Date
Addendum 1	04/17/2026

Submittal	Date
100% SCHEMATIC DESIGN	12/05/2025
DSA SUBMITTAL	02/02/2026
DSA SUBMITTAL V2	03/13/2026

Job Number	33366
Checked By	AG /SC
Scale	N.T.S.

IRRIGATION DETAILS

L6.03

NOTE :
OFCI PLANTING IS TO BE CONTRACT GROWN AND SOURCED FROM THE FOLLOWING NURSERY:

HEATHER PRAUN
HEATHER@PLANT-MATERIAL.COM
818.281.6494

CONTRACTOR IS RESPONSIBLE FOR COORDINATING PLANTING DELIVERY AND INSTALLATION SCHEDULE WITH OWNER

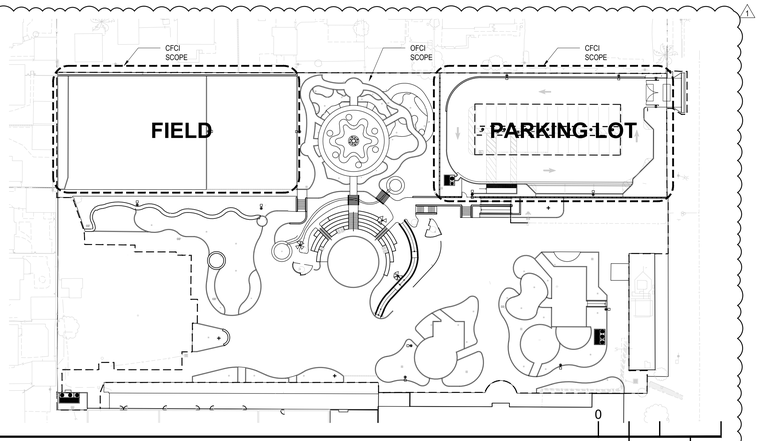

SCOPE PLAN | NTS | 16

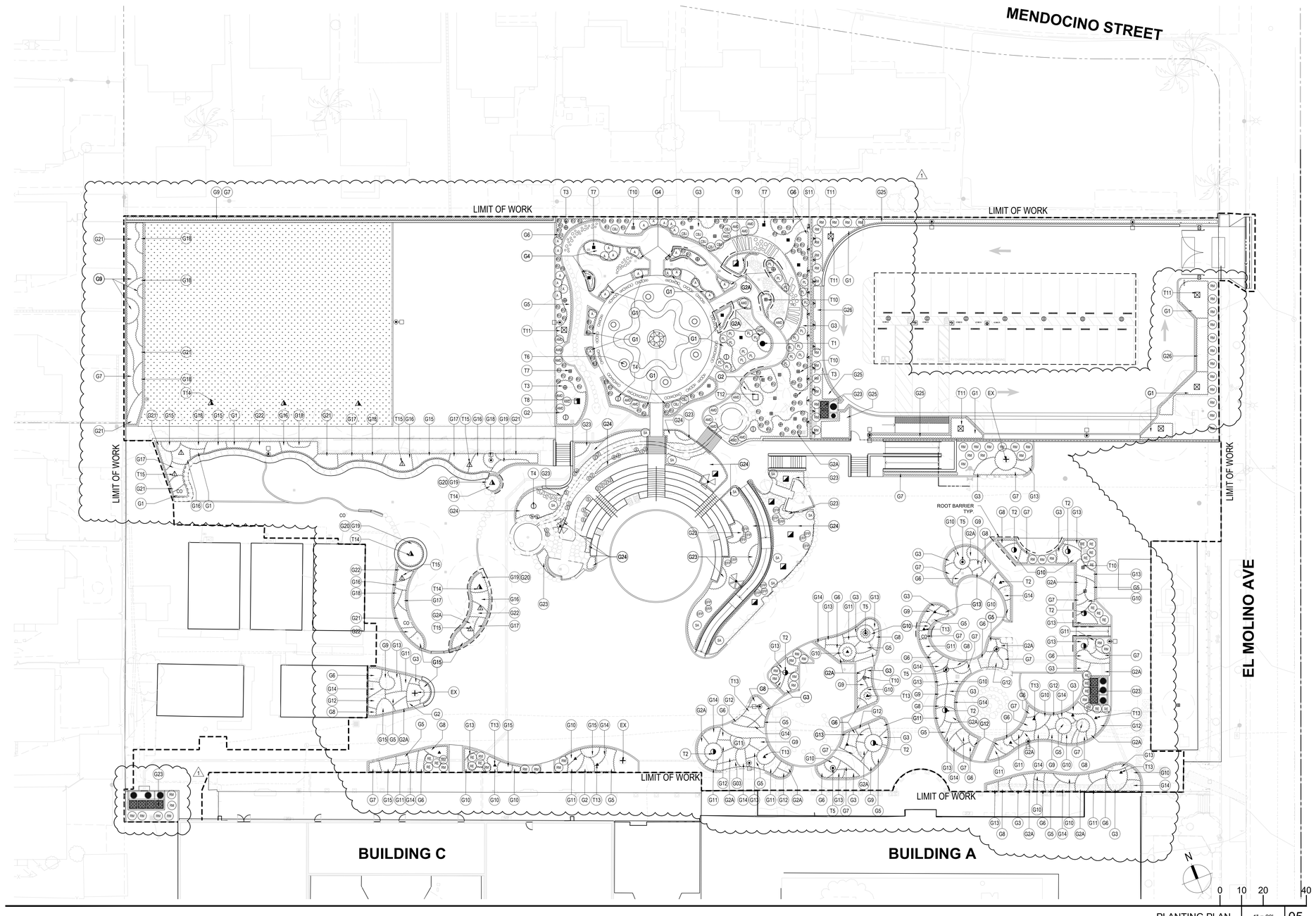

PLANTING PLAN | 1" = 20' | 05

PLANTING LEGEND

TREE LIST

(NCN.)- NO COMMON NAME (*)- UNLESS NOTED ON PLAN

REF.	SYM.	QTY. OFCI	QTY. CFCI	BOTANICAL NAME/ COMMON NAME	WUCOLS	SIZE/ SPACING	COMMENTS/ DET
T1	●	1		ARBUTUS MENZIESII/ STRAWBERRY TREE	M	48" BOX MULTI	01/09
T2	◑	8		CHILOPSIS CHITALPA/ DESERT WILLOW	L	48" BOX MULTI	01/09
T3	⊕	7		CEANOTHUS 'RAY HARTMAN'/ RAY HARTMAN CEANOTHUS	L	48" BOX MULTI	01/09
T4	⦶	5		CERCIS OCCIDENTALIS/ WESTERN REDBUD	L	48" BOX MULTI	01/09
T5	⦿	5		CHILOPSIS LINEARIS/ DESERT WILLOW	L	48" BOX MULTI	01/09
T6	○	6		GINKGO BILOBA/ MAIDENHAIR TREE	M	48" BOX STANDARD	01/09 L7.02
T7	■	7		HETEROMELES ARBUTIFOLIA/ CALIFORNIA HOLLY	L	15 GAL MULTI	01/09
T8	◨	1		KOELREUTERIA PANICULATA/ GOLDENRAIN TREE	L	48" BOX MULTI	01/09
T9	◪	7		LYONOTHAMUS FLORIBUNDUS/ ISLAND IRONWOOD	L	48" BOX STANDARD	01/09 L7.02
T10	⊞	16		MALU FUSCA/ OREGON CRABAPPLE	M	24" BOX STANDARD	01/09 L7.02
T11	⊠	1	5	QUERCUS BUCKLEYI/ TEXAS RED OAK	L	48" BOX STANDARD	01/09 L7.02
T12	□	1		QUERCUS AGRIFOLIA/ CALIFORNIA LIVE OAK	L	48" BOX STANDARD	01/09 L7.02
T13	▲	16		ROMNEYA COULTERI/ CALIFORNIA TREE POPPY	VL	48" BOX STANDARD	01/09 L7.02
T14	◮	3	3	JACARANDA MIMOSIFOLIA/ JACARANDA	M	36" BOX STANDARD	01/09 L7.02
T15	◬	7		PUNICA GRANATUM/ POMEGRANATE TREE	L	15 GAL STANDARD	01/09 L7.02
ET	+			EXISTING TREE			- -

SHRUB / VINE LIST

S1	A	25		AMELANCHIER UTAHENSIS/ SERVICE BERRY	L	15 GAL	03/04 L7.02
S2	AMD	21		ARCTOSTAPHYLOS MANZANITA 'DR. HURD'/ DR. HURD MANZANITA	L	5 GAL	03/04 L7.02
S3	CBJ	9		CEANOTHUS 'BLUE JEANS'/ MOUNTAIN LILAC	M	15 GAL	03/04 L7.02
S4	EFP	17		ERIOGONUM FASCICULATUM VAR. POLIFOLIUM / CALIFORNIA BUCKWHEAT	VL	15 GAL	03/04 L7.02
S5	PL	23		PHILADELPHIS LEWISII/ MOCK ORANGE	M	5 GAL	03/04 L7.02
S6	RE	19		RHAMNUS CALIFORNICA 'EVE CASE'/ COFFEEBERRY	L	5 GAL	17 L7.02
S7	RM	45	21	RHAMNUS CALIFORNICA 'MOUND SAN BRUNO'/ COFFEEBERRY		15 GAL	17 L7.02
S8	RV	90		RIBES VIBURNIFOLIUM/ CATALINA CURRANT	M	5 GAL	03/04 L7.02
S9	S	26		SPOROBOLUS AIROIDES/ ALKALI SACATON	L	15 GAL	03/04 L7.02
S10	SA	10		SPHAERALCEA AMBIGUA 'LOUIS HAMILTON'/ LOUIS HAMILTON DESERT MALLOW		5 GAL	03/04 L7.02
S11		10	10	CAMPSIS RADICANS/ TRUMPED CREEPER		15 GAL	17/ L7.02

GROUNDCOVER LIST

G1		108	131	PENSTEMON EATONII/ FIRECRACKER PENSTEMON	L	5 GAL 48" O.C.	03/04 L7.02
G2		39		SATUREJA DOUGLASII/ YERBA BUEANA	L	5 GAL 36" O.C	03/04 L7.02
G2A		53		SALVIA LEUCOPHYLLA/ PURPLE SAGE	L	5 GAL 60" O.C.	03/04 L7.02
G3		100		SALVIA SPATHACEA/ HUMMINGBIRD SAGE	L	5 GAL 48" O.C.	03/04 L7.02
G4		11		SPOROBOLUS AIROIDES/ ALKALAI SACATON	M	5 GAL 36" O.C.	03/04 L7.02
G5		80		SPHAERALCEA AMBIGUA/ DESERT GLOBEMALLOW	VL	5 GAL 36" O.C.	03/04 L7.02
G6		110		SPHAERALCEA AMBIGUA 'LOUIS HAMILTON'/ LOUIS HAMILTON DESERT MALLOW		5 GAL 36" O.C.	03/04 L7.02
G7		38	8	ERIOGONUM ARBORESCENS/ SANTA CRUZ ISLAND	VL	5 GAL 48" O.C.	03/04 L7.02
G8		13		ERIOGONUM FASCICULATUM VAR. POLIFOLIUM/ CALIFORNIA BUCKWHEAT		5 GAL 60" O.C.	03/04 L7.02
G9		17	5	ERIOGONUM GIGANTEUM/ ST. CATHERINE'S LACE	VL	5 GAL 60" O.C.	03/04 L7.02
G10		212		HEUCHERA MAXIMA/ ISLAND ALUMN ROOT	M	1 GAL 24" O.C.	03/04 L7.02
G11		139		OENOTHERA ELATA/ HOOKER'S EVENING PRIMROSE	L	1 GAL 24" O.C.	03/04 L7.02
G12		24		SALVIA MELLIFERA/ BLACK SAGE	L	5 GAL 48" O.C.	03/04 L7.02
G13		181		SALVIA OFFICINALIS/ GARDEN SAGE	M	1 GAL 24" O.C.	03/04 L7.02
G14		143		SOLIDAGO VELUNTINA SSP. CALIFORNICA/ CALIFORNIA GOLDEN ROD	M	1 GAL 24" O.C.	03/04 L7.02
G15		19		SALVIA 'ALLEN CHICKERING'/ ALLEN CHICKERING SAGE	L	5 GAL 60" O.C.	03/04 L7.02
G16		114		VERBENA LILACINA 'DE LA MINA'/ CEDROS ISLAND VERBENA	L	5 GAL 24" O.C.	03/04 L7.02
G17		29		MIMULUS AURANTIACUS 'MATTOLE POINT'/ STICKY MONKEY FLOWER	L	5 GAL 36" O.C.	03/04 L7.02
G18		22	27	ENCELIA FARINOSA/ BRITTLEBRUSH	VL	1 GAL 36" O.C.	03/04 L7.02
G19		20		LAVANDULA ANGUSTIFOLIA/ ENGLISH LAVENDER	L	5 GAL 36" O.C.	03/04 L7.02
G20		29		LINUM LEWISII/ PRAIRIE FLAX	L	1 GAL 24" O.C.	03/04 L7.02
G21		37	40	SALVIA LEUCANTHA 'DANIELLE'S DREAM'/ MEXICAN BUSH SAGE	L	5 GAL 36" O.C.	03/04 L7.02
G22		24		SALVIA MICROPHYLLA 'HOT LIPS'/ HOT LIPS SAGE	L	5 GAL 24" O.C.	03/04 L7.02
G23		128	7	ACHILLEA MILLEFOLIUM/ YARROW	L	1 GAL 24" O.C.	03/04 L7.02
G24		2189 SQFT		WILD FLOWER MIXSEED		HYDROSEED	
G25		150		CAREX DIVULSA BERKLEY SAGE	M	5 GAL 24" O.C.	03/04 L7.02
G26		47		SALVIA ALLEN CHICKERING/ ALLEN CHICKENRING SAGE	L	5 GAL 30" O.C	03/04 L7.02

MISCELLANEOUS SYMBOLS

- - - - -	LINEAR ROOT BARRIER	09/ L7.02

TURF LIST

	AS REQ'D	HYBRID BERMUDA	SOD -

LPA
ARCHITECTURE ENGINEERING INTERIOR DESIGN
LANDSCAPE ARCHITECTURE PLANNING
949-261-1001 Office
LPADesignStudios.com
5301 California Avenue, Suite 100
Irvine, California 92617

THE JOBSON FAMILY FOUNDATION

CONCEPT DESIGN:
Landscape Architect
Helle Nebelong
Denmark
hellenebelong.com

This document and all other project documents, ideas, aesthetics and designs incorporated therein are instruments of service. All project documents are copyright protected, are the property of LPA, Inc. (LPA) and cannot be lawfully used in whole or in part for any project or purpose except as set forth in the contractual agreement between LPA and its Client. The unauthorized disclosure and/or use of the project documents (including the creation of derivative works), may give rise to liability for copyright infringement, unlawful disclosure, use or misappropriation of property rights held by LPA. The unauthorized use of the project documents will give rise to the recovery of monetary losses and damages including attorney fees and costs for which the unauthorized user will be held liable.
Project documents describe the design intent of the work and are not a representation of as-built or existing conditions. LPA is not responsible for any discrepancies between the project documents and the existing conditions.

© LPA, Inc.

ALTADENA ARTS MAGNET SCHOOL

743 E CALAVERAS ST.
ALTADENA, CA 91001

Developed for
PASADENA UNIFIED SCHOOL DISTRICT

Revision	Date
Addendum 1	04/28/2026

Submittal	Date
100% SCHEMATIC DESIGN	12/05/2025
DSA SUBMITTAL	02/02/2026
DSA SUBMITTAL V2	03/13/2026

Job Number	33366
Checked By	AG /SC
Scale	1" = 20'

PLANTING PLAN

L7.01

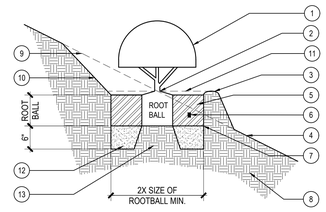

LEGEND

1. 1 TO 15 GALLON SHRUB. (SEE PLANTING PLAN)
2. SET CROWN OF ROOTBALL 1" ABOVE FINISH GRADE AND SLOPE SOIL AWAY FROM ROOTBALL. ADJUST HEIGHT OF PLANTING TO ACCOMODATE SETTLING DUE TO SOIL TYPES.
3. WATER BASIN. 4" MIN. FOR 5 GALLON & LARGER. 2" MIN FOR 1 GALLON
4. FINISH GRADE
5. AMENDED BACKFILL. SEE SPECS. FOR MIX AND PIT SIZE.
6. PLANT TABLET. SEE SPECS.
7. SCARIFY SIDES AND BOTTOM OF PLANTING PIT.
8. EXISTING SOIL.
9. EXISTING SLOPE
10. CUT SLOPE TO MEET ROOTBALL.
11. 3" MULCH. MAINTAIN CONSTANTLY SEE SPECS.
12. COMPACTED BACKFILL, SEE SPECS. PUDDLE AND SETTLE PRIOR TO SETTING SHRUB.
13. UNDISTURBED EXISTING SOIL TO FORM PEDESTAL. REPLACE WITH COMPACTED NATURAL SOIL IF HARDPAN EXISTS.

NOTE:

A. FOR SPACING SEE XX

SHRUB PLANTING ON SLOPE | 3/4" = 1'-0" | 04

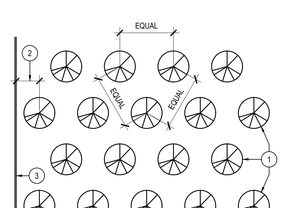

LEGEND:

1. LOCATE PLANTS WITH EQUAL SPACING AS INDICATED ON PLAN (TRIANGULAR SPACING).
2. 1/2 ON CENTER SPACING.
3. PAVING, BUILDING, OR HEADER SHOWING PLANTING AREA LIMIT.

TRIANGULAR SPACING | 1/4" = 1'-0" | 07

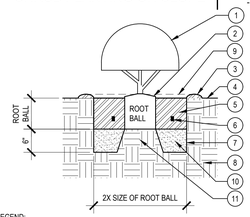

LEGEND:

1. 1 TO 15 GALLON SHRUB; REFER TO PLANTING PLAN.
2. SET CROWN OF ROOTBALL 1" ABOVE FINISH GRADE AND SLOPE SOIL AWAY FROM ROOTBALL. ADJUST HEIGHT OF PLANTING TO ACCOMODATE SETTLING DUE TO SOIL TYPES.
3. WATER BASIN. 4" MIN. FOR 5 GAL. & LARGER. 2" MIN FOR 1 GAL.
4. FINISH GRADE
5. AMENDED BACKFILL; SEE SPECS FOR MIX.
6. PLANT TABLET; SEE SPECS.
7. SCARIFY SIDES AND BOTTOM OF PLANTING PIT.
8. EXISTING SOIL.
9. 3" MULCH, MAINTAIN CONSTANTLY. SEE SPECS.
10. COMPACTED BACKFILL; SEE SPECS. PUDDLE AND SETTLE PRIOR TO SETTING SHRUB.
11. UNDISTURBED EXISTING SOIL TO FORM PEDESTAL. REPLACE WITH COMPACTED NATURAL SOIL IF HARDPAN EXISTS.

NOTE:

A. FOR SHRUB SPACING SEE XX

SHRUB PLANTING DETAIL | 3/4" = 1'-0" | 03

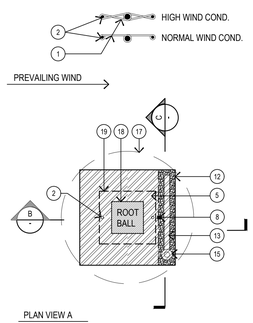

PLAN VIEW A

LEGEND

1. 32" BLACK VIT "CINCH TIES". ATTACH W/ TWO ROOFING NAILS. FOR 36" BOX AND LARGER, USE 36" BLACK VIT "TWIST BRACE". SEE PLAN VIEW. FOR HIGH WIND CONDITIONS: VIT TWIST BRACES ATTACH W/ TWO ROOFING NAILS. TYPICAL TWO EACH SIDE. SEE PLAN VIEW.
2. 2" DIA. X 12' LODGE POLE PINE STAKES. 3" DIA X 12' LODGE POLE PINE STAKES FOR 36" BOX AND LARGER TREES. (HEIGHT OF STAKE -8'-10'-12' SHOULD BE ADJUSTED BASED ON CONTAINER SIZE, HEIGHT OF TREE, AND GROWTH RATE) CUT STAKES TO MATCH HT. AS DIRECTED BY LANDSCAPE ARCHITECT.
3. FINISH GRADE
4. WATER BASIN. 4" MIN. DEPTH FOR 5 GAL. & LARGER IN LAWN AREAS AND AS DIRECTED BY LANDSCAPE ARCHITECT.
5. AMENDED BACKFILL. SEE SPECIFICATIONS FOR MIX AND PIT SIZE.
6. SCARIFY SIDES AND BOTTOM OF PLANTING PIT.
7. EXISTING SOIL.
8. PLANT TABLET. PER SPECS.
9. SET TOP OF ROOTBALL X" ABOVE SURROUNDING GRADE AND SLOPE FOR DRAINAGE. PROVIDE 2' DIA. MULCH RING AT TREES WITHIN TURF. ADJUST HEIGHT OF TREE PLANTING TO ACCOMMODATE SETTLING DUE TO SOIL TYPE.
10. 3" MULCH, MAINTAIN CONSTANTLY.
11. COMPACTED BACKFILL. PUDDLE AND SETTLE PRIOR TO SETTING TREE.
12. 12" WIDE TRENCH ALONG ONE SIDE. FILL WITH 3/4" DRAIN GRAVEL.
13. 4" PERFORATED DRAIN PIPE PLACED HORIZONTAL.
14. "MIRAFI" 140N FILTER FABRIC.
15. 4" NIBCO, BLACK - 'ABS' PLUG 4" NIBCO, BLACK - 'ABS' FEMALE RECIEVER NDS, WHITE 'PVC' ADAPTOR FOR CONNECTION FROM FEMALE RECIEVER TO PVC SOLID STAND PIPE
16. UNDISTURBED EXISTING SOIL TO FORM PEDESTAL AND PREVENT SETTLING. REPLACE WITH COMPACTED NATURAL SOIL IF HARDPAN EXISTS.
17. TREE CANOPY
18. BOTTOM OF ROOTBALL/ TOP OF PEDESTAL.
19. BASE OF PEDESTAL FOR TREE.

NOTE:

A. PROVIDE (2) 6" DIA. x 6' DEEP AUGER HOLES IF EXCAVATED HOLE DOES NOT DRAIN FASTER THAN 1" PER HOUR AS DETERMINED BY SOILS REPORT AND FIELD CONDITIONS.

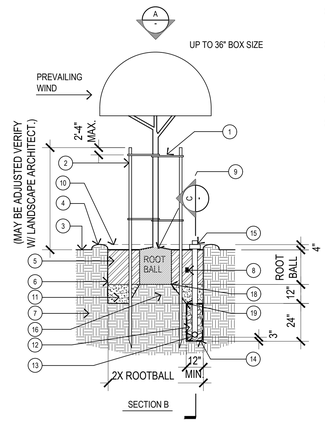

SECTION B

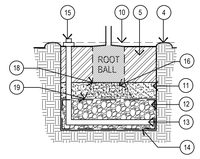

SECTION C

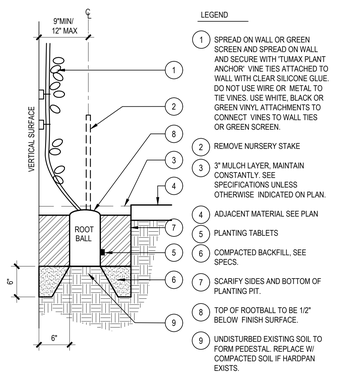

LEGEND

1. SPREAD ON WALL OR GREEN SCREEN AND SPREAD ON WALL AND SECURE WITH 'TUMAX PLANT ANCHOR' VINE TIES ATTACHED TO WALL WITH CLEAR SILICONE GLUE. DO NOT USE WIRE OR METAL TO TIE VINES. USE WHITE, BLACK OR GREEN VINYL ATTACHMENTS TO CONNECT VINES TO WALL TIES OR GREEN SCREEN.
2. REMOVE NURSERY STAKE
3. 3" MULCH LAYER, MAINTAIN CONSTANTLY. SEE SPECIFICATIONS UNLESS OTHERWISE INDICATED ON PLAN.
4. ADJACENT MATERIAL SEE PLAN
5. PLANTING TABLETS
6. COMPACTED BACKFILL, SEE SPECS.
7. SCARIFY SIDES AND BOTTOM OF PLANTING PIT.
8. TOP OF ROOTBALL TO BE 1/2" BELOW FINISH SURFACE.
9. UNDISTURBED EXISTING SOIL TO FORM PEDESTAL. REPLACE W/ COMPACTED SOIL IF HARDPAN EXISTS.

VINE PLANTING | 1" = 1'-0" | 17

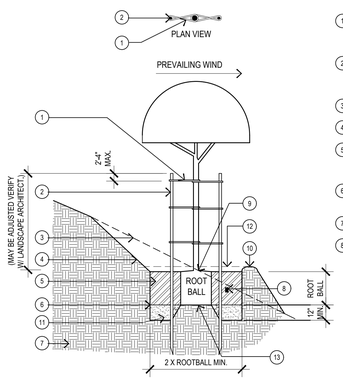

1. 32" BLACK VIT "CINCH TIES". ATTACH W/ TWO ROOFING NAILS. SEE PLAN VIEW.
2. 2" DIA. X 8' AND 10' LODGE POLE PINE STAKES. CUT STAKE AS DIRECTED BY LANDSCAPE ARCHITECT.
3. EXISTING SLOPE.
4. CUT SLOPE TO MEET PLANT PIT.
5. AMENDED BACKFILL. SEE SPECIFICATIONS FOR MIX AND PIT SIZE.
6. SCARIFY SIDES AND BOTTOM OF PLANTING PIT.
7. EXISTING SOIL.
8. PLANT TABLET.
9. SET TOP OF ROOTBALL 2" ABOVE SURROUNDING GRADE AND SLOPE FOR DRAINAGE. PROVIDE 2' DIA. MULCH RING AT TREES WITHIN TURF. ADJUST HEIGHT OF TREE PLANTING BASED ON SETTLING DUE TO SOIL TYPE.
10. WATER BASIN. 4" MIN. FOR 5 GAL. & LARGER. SEE SPECS. REMOVE BASIN IN LAWN AREAS AND AS DIRECTED BY LANDSCAPE ARCHITECT.
11. COMPACTED BACKFILL - PUDDLE AND SETTLE PRIOR TO SETTING TREE.
12. 3" MULCH, MAINTAIN CONSTANTLY.
13. UNDISTURBED EXISTING SOIL TO FORM PEDESTAL, REPLACE W/ COMPACTED NATURAL SOIL IF HARDPAN EXISTS

NOTE:

A. PROVIDE (2) 6" DIA. x 6' DEEP AUGER HOLES IF EXCAVATED HOLE DOES NOT DRAIN FASTER THAN 1" PER HOUR AS DETERMINED BY SOILS REPORT AND FIELD CONDITIONS. PROVIDE TEST PIT FOR REVIEW.

B. SEE DETAIL XX FOR MULTI TRUNK TREE.

C. PROVIDE STANDPIPES FOR ALL PINES ON SLOPES SIM XX

TREE STAKING AND PLANTING ON SLOPE | 1/4"=1'-0" | 09

TREE STAKING AND PLANTING DETAIL | 1/4"=1'-0" | 01

LPA

ARCHITECTURE ENGINEERING INTERIOR DESIGN
LANDSCAPE ARCHITECTURE PLANNING

949-261-1001 Office

LPADesignStudios.com

5301 California Avenue, Suite 100
Irvine, California 92617

THE JOBSON FAMILY FOUNDATION

CONCEPT DESIGN:

Landscape Architect
Helle Nebelong
Denmark
hellenebelong.com

This document and all other project documents, ideas, aesthetics and designs incorporated therein are instruments of service. All project documents are copyright protected, are the property of LPA, Inc. (LPA) and cannot be lawfully used in whole or in part for any project or purpose except as set forth in the contractual agreement between LPA and its Client. The unauthorized disclosure and/or use of the project documents (including the creation of derivative works), may give rise to liability for copyright infringement, unlawful disclosure, use or misappropriation of property rights held by LPA. The unauthorized use of the project documents will give rise to the recovery of monetary losses and damages including attorney fees and costs for which the unauthorized user will be held liable.
Project documents describe the design intent of the work and are not a representation of as-built or existing conditions. LPA is not responsible for any discrepancies between the project documents and the existing conditions.

© LPA, Inc.

ALTADENA ARTS MAGNET SCHOOL

743 E CALAVERAS ST.
ALTADENA, CA 91001

Developed for
PASADENA UNIFIED SCHOOL DISTRICT

Revision	Date
Addendum 1	04/28/2026

Submittal	Date
100% SCHEMATIC DESIGN	12/05/2025
DSA SUBMITTAL	02/02/2026
DSA SUBMITTAL 1/2	03/13/2026

Job Number	33366
Checked By	AG /SC
Scale	AS NOTED

PLANTING DETAILS

L7.02

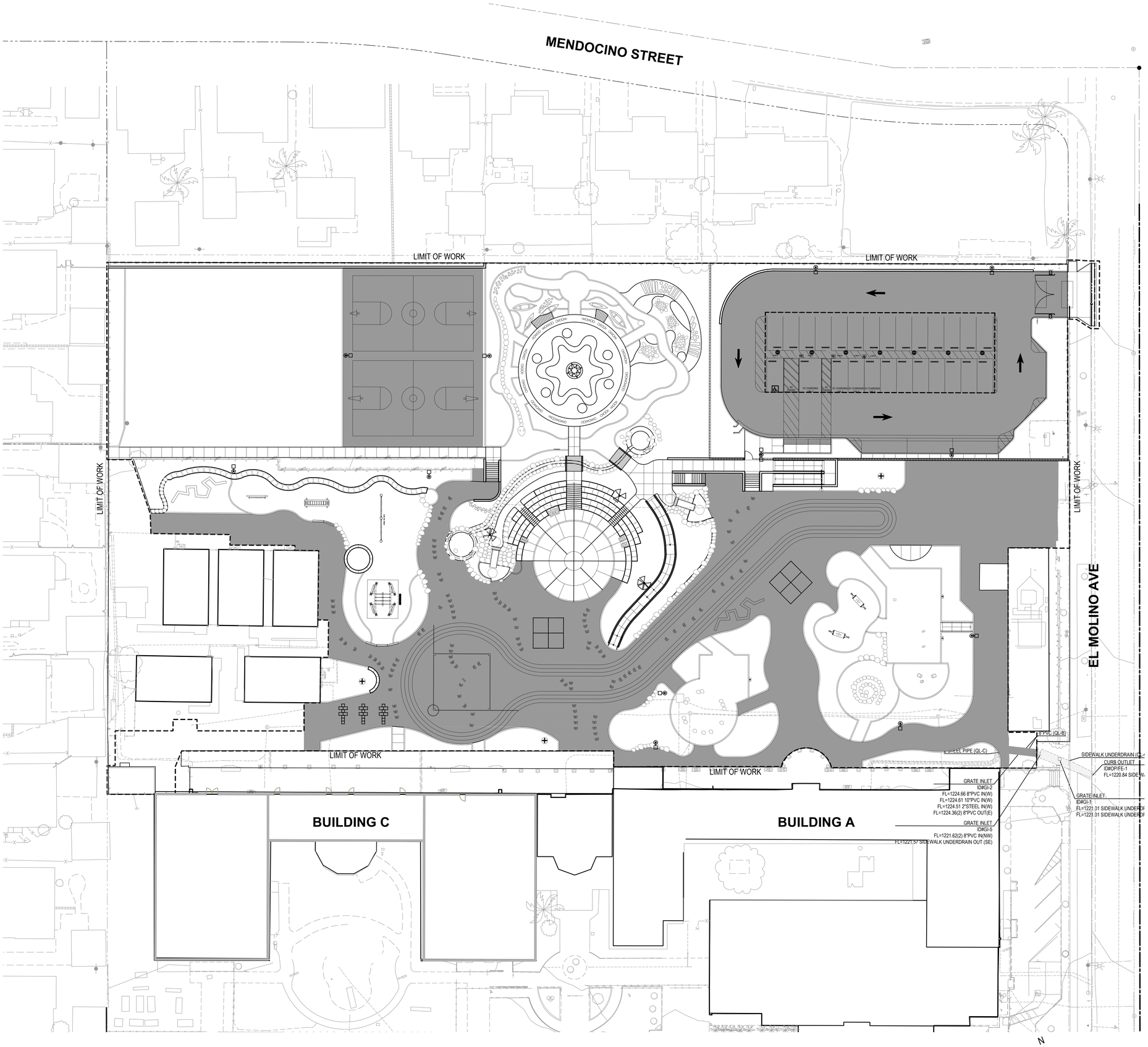

STRIPING PLAN 1" = 20' 05

STRIPING LEGEND

SYM.	DESCRIPTION	COMMENTS
	ASPHALT COATING FROM STREETBOND W/ DURASHIELD COATING	COLOR TBD ~51,965 SF
	RUNNING TRACK FROM STREETBOND W/ DURASHIELD COATING	COLOR: RAL 2017 01/L5.06
	KICKBALL STRIPING FROM STREETBOND W/ DURASHIELD COATING	COLOR: SR WHITE 02/L5.06
	HOPSCOTCH STRIPING FROM STREETBOND W/ DURASHIELD COATING	COLOR: SR WHITE 03/L5.06
	FOUR SQUARE STRIPING FROM STREETBOND W/ DURASHIELD COATING	COLOR: SR WHITE -
P	BUTTERFLY STRIPPING TYPE P	COLOR: RAL 2012 04/L5.06
Y	BUTTERFLY STRIPPING TYPE Y	COLOR: RAL 2007 04/L5.06
O	BUTTERFLY STRIPPING TYPE O	COLOR: RAL 2017 04/L5.06
B	BUTTERFLY STRIPPING TYPE B	COLOR: RAL 2011 04/L5.06

LPA

ARCHITECTURE ENGINEERING INTERIOR DESIGN
LANDSCAPE ARCHITECTURE PLANNING

949-261-1001 Office

LPADesignStudios.com

5301 California Avenue, Suite 100
Irvine, California 92617

THE JOBSON FAMILY FOUNDATION

CONCEPT DESIGN:
Landscape Architect
Helle Nebelong
Denmark
hellenebelong.com

This document and all other project documents, ideas, aesthetics and designs incorporated therein are instruments of service. All project documents are copyright protected, are the property of LPA, Inc. (LPA) and cannot be lawfully used in whole or in part for any project or purpose except as set forth in the contractual agreement between LPA and its Client. The unauthorized disclosure and/or use of the project documents (including the creation of derivative works), may give rise to liability for copyright infringement, unlawful disclosure, use or misappropriation of property rights held by LPA. The unauthorized use of the project documents will give rise to the recovery of monetary losses and damages including attorney fees and costs for which the unauthorized user will be held liable.
Project documents describe the design intent of the work and are not a representation of as-built or existing conditions. LPA is not responsible for any discrepancies between the project documents and the existing conditions.

© LPA, Inc.

ALTADENA ARTS MAGNET SCHOOL

743 E CALAVERAS ST.
ALTADENA, CA 91001

Developed for
PASADENA UNIFIED SCHOOL DISTRICT

Revision	Date
Addendum 1	04/28/2026

Submittal	Date
100% SCHEMATIC DESIGN	12/05/2025
DSA SUBMITTAL	02/02/2026
DSA SUBMITTAL V2	03/13/2026

Job Number	33366
Checked By	AG /SC
Scale	1" = 20'

STRIPING PLAN

L8.01

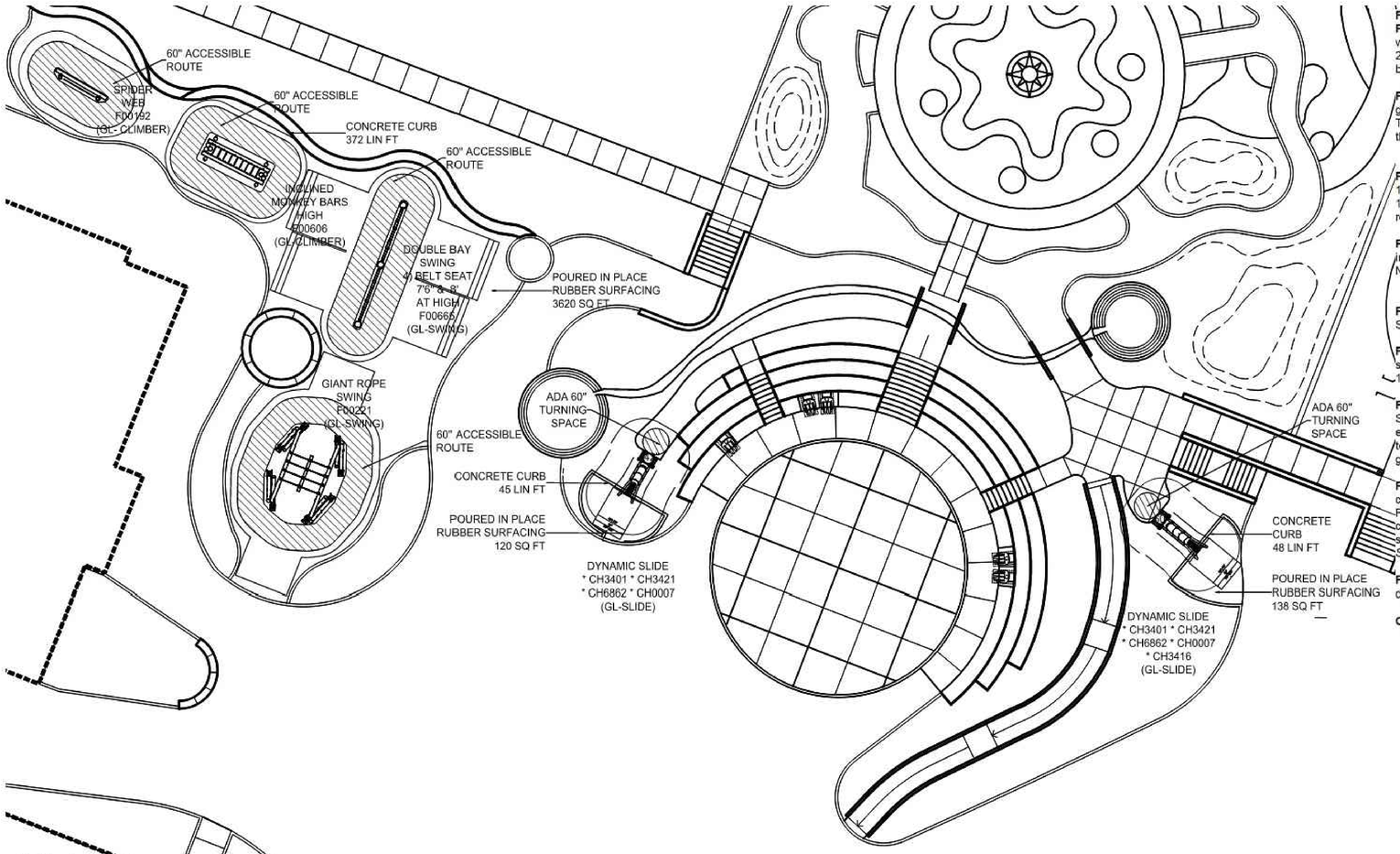

Play Areas 11B-240:

PG1) Where separate play areas are provided for specific age groups, each play area shall comply with CBC Section 11B-240. Our designs are compliant to this building code section. Section 11B-240 is similar to the ADA Accessibility Guidelines that are Law in CA that we must abide by as well but the ADAAG is more comprehensive.

PG2) Identify all ground level and elevated play components. Provide and identify accessible ground level and elevated play components per CBC Section 11B-240.2 and TABLE 11B-240.2.1.2. The attached drawing includes the ADA table in the bottom left side of the drawing, which shows the number of elevated and ground level play components.

PG3) Provide accessible routes to all accessible play components per CBC Section 11B-1008.2. and CBC Section 11B-1008.2.4. Transfer systems may be used per CBC Section 11B-1008.2.1 Exceptions. Trasnfer steps heights and platforms have been listed and meet this requirement. Access has been shown.

PG4) Ramps connecting play components shall comply with CBC Section 11B-1008.2.5 This design includes ramps and is labeled as such in the drawing. . Complies with CBC Section 11B-1008.2.5 N/A

PG5) Transfer platforms for transfer from wheelchairs or other mobility aids shall comply with CBC Section 11B-1008.3.1. Our transfer stations/transfer systems are compliant to 11b-1008.3.1.

PG6) Transfer steps for movement from transfer platforms to levels with elevated play components shall comply with CBC Section 11B-1008.3.2 Our transfer station steps are compliant to 11B-1008.3.2.

PG7) Show a clear floor or ground space per CBC Section 1008.4.2 and a turning space per CBC Sections 11B-1008.4.1 for all ground level play components on an accessible route and for all elevated play components connected by ramps. Our design meets this requirement. It's important to note that because elevated play equipment requires a minimum of 6' use zone for safety, that all ground based activities will have at least 6' of clear space for access as well.

PG8) Ground surfaces on accessible routes, clear floor or ground spaces, and turning spaces shall comply with CBC Section 11B-1008.2.6: For accessibility; ground surfaces shall comply with ASTM F 1951 and shall be inspected and maintained regularly and frequently to ensure continued compliance. Identify ground surfaces located within use zones. Ground surfaces within use zones shall comply with ASTM F 1292 *and ASTM 1951. Attached Specification for Poured in Place Rubber Surfacing demonstrates it meets ASTM F1951 and ASTM F1292.*

PG9) Where play tables are provided, they shall comply with CBC Section 11B-1008.4.3. While we do have a playseat as part of this design, there are no play tables so this would not apply.

CBC Chapter 2 Definitions:

Title of Project:	Altadena Arts Magnet School	C26021R1			
Model number	Description	Ground / Elevated	Elevated and accessible by ramp or transfer	Type of Ground	Qty
ZZUN3401	Dynamic Descent Slide	Ground	n/a	slide	2
F00606	Inclined Monkey Bars	Ground	n/a	climber	1
F00665	Double Bay Swing	Ground	n/a	swing	1
F00221	Giant Rope Swing	Ground	n/a	swing	1
F00633	Small Hammock	Ground	n/a	sway	2
F00192	Spiderweb	Ground	n/a	climber	1
	Total elevated play components:		0		
	Total elevated play components accessible by ramp:		0	Required	
	Total elevated play components accessible by transfer:		0	Required	
	Total accessible ground level components shown:		8	Required	
	Total accessible ground level components of different types:		4	Required	

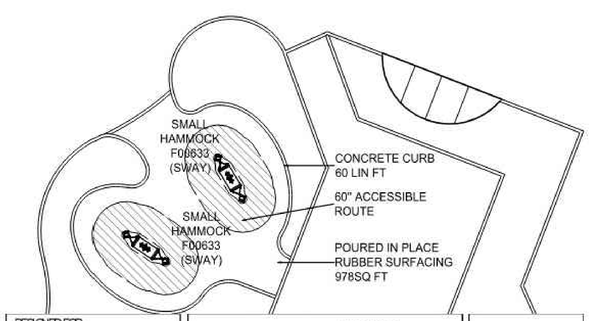

PLAY STRUCTURE AND LAYOUT OF THE COMPONENTS CONFORM TO ASTM F1487-21 AND CPSC #325 GUIDELINES AND CCR TITLE 22, DIVISION 4 CHAPTER 22.
CRITICAL FALL HEIGHT OF OVERALL PLAY AREA: 115"

PROJECT:

ALTADENA ARTS MAGNE

ALTADENA, CA

DESIGNED BY:
BRITTANY BOURBONNAIS
MARCH 11, 2026
DRAWING # C26021R2
PROJECT # 26000783

DESIGNED FOR
AGES 2▸12

since 1979
dave bang associates inc.
▸ park+playground outfitters

LPA
ARCHITECTURE ENGINEERING INTERIOR DESIGN
LANDSCAPE ARCHITECTURE PLANNING
949-261-1001 Office
LPADesignStudios.com
5301 California Avenue, Suite 100
Irvine, California 92617

THE JOBSON FAMILY FOUNDATION

CONCEPT DESIGN:
Landscape Architect
Helle Nebelong
Denmark
hellenebelong.com

This document and all other project documents, ideas, aesthetics and designs incorporated therein are instruments of service. All project documents are copyright protected, are the property of LPA, Inc. (LPA) and cannot be lawfully used in whole or in part for any project or purpose except as set forth in the contractual agreement between LPA and its Client. The unauthorized disclosure and/or use of the project documents (including the creation of derivative works), may give rise to liability for copyright infringement, unlawful disclosure, use or misappropriation of property rights held by LPA. The unauthorized use of the project documents will give rise to the recovery of monetary losses and damages including attorney fees and costs for which the unauthorized user will be held liable.
Project documents describe the design intent of the work and are not a representation of as-built or existing conditions. LPA is not responsible for any discrepancies between the project documents and the existing conditions.

© LPA, Inc.

ALTADENA ARTS MAGNET SCHOOL

743 E CALAVERAS ST.
ALTADENA, CA 91001

Developed for
PASADENA UNIFIED SCHOOL DISTRICT

Revision	Date
Addendum 1	04/28/2026

Submittal	Date
100% SCHEMATIC DESIGN	12/05/2025
DSA SUBMITTAL	02/02/2026
DSA SUBMITTAL V2	03/13/2026

Job Number	33366
Checked By	AG /SC
Scale	1' = 20'

PLAY EQUIPMENT PLAN

PE1.01

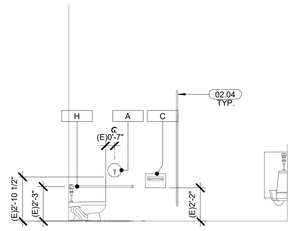

BOYS B210 RESTROOM - WEST | 1/4" = 1'-0" | A1.01 | 20

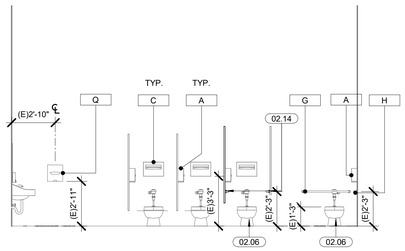

BOYS B210 RESTROOM - SOUTH | 1/4" = 1'-0" | A1.01 | 16

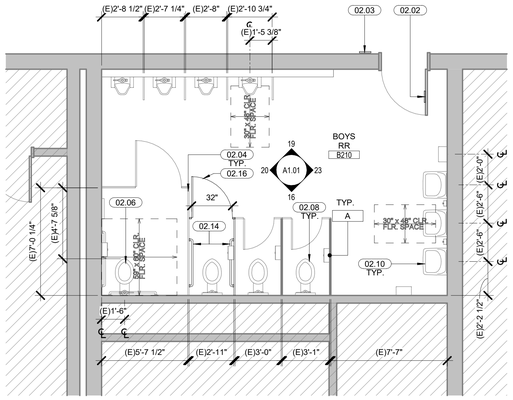

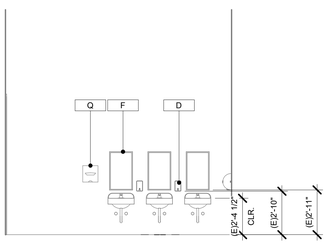

BOYS B210 RESTROOM - EAST | 1/4" = 1'-0" | A1.01 | 23

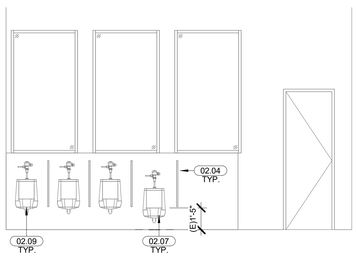

BOYS B210 RESTROOM - NORTH | 1/4" = 1'-0" | A1.01 | 19

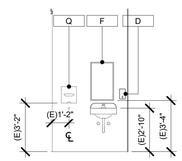

STAFF B204A RESTROOM - SOUTH | 1/4" = 1'-0" | A1.01 | 15

BOYS B210 RESTROOMS - ENLARGED PLAN | 1/4" = 1'-0" | A1.01 | 07

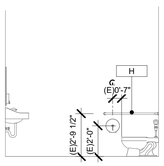

STAFF B204A RESTROOM - WEST | 1/4" = 1'-0" | A1.01 | 22

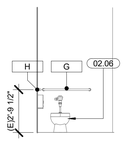

STAFF B204A RESTROOM - NORTH | 1/4" = 1'-0" | A1.01 | 18

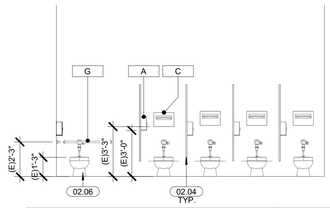

GIRLS B205 RESTROOM - SOUTH | 1/4" = 1'-0" | A1.01 | 14

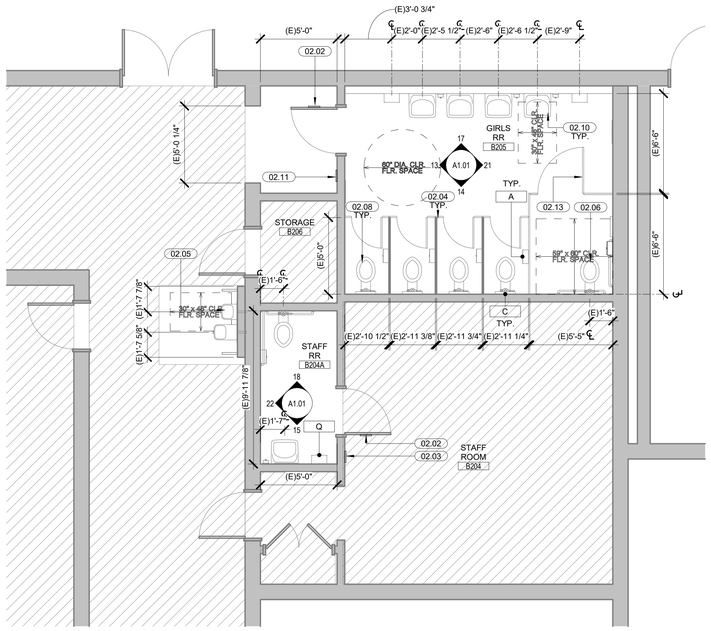

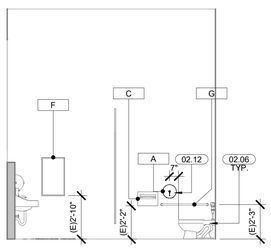

GIRLS B205 RESTROOM - EAST | 1/4" = 1'-0" | A1.01 | 21

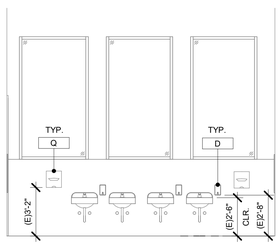

GIRLS B205 RESTROOM - NORTH | 1/4" = 1'-0" | A1.01 | 17

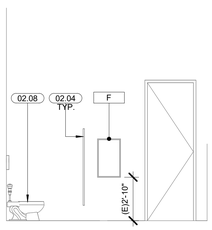

GIRLS B205 RESTROOM - WEST | 1/4" = 1'-0" | A1.01 | 13

GIRLS B205 AND STAFF RESTROOMS - ENLARGED PLAN | 1/4" = 1'-0" | A1.01 | 05

KEYNOTES

02.02	(E) ACCESSIBLE RESTROOM DOOR SIGNAGE, COMPLIANT, PER 05/A10.40.
02.03	(E) ACCESSIBLE RESTROOM WALL SIGNAGE COMPLIANT PER 09/A10.40
02.04	(E) ACCESSIBLE TOILET PARTITION. PROTECT IN PLACE
02.05	(E) ACCESSIBLE DRINKING FOUNTAINS PER A# 03-113581, RE: 21/G0.32 FOR COMPLIANCE
02.06	(E) ACCESSIBLE FLOOR MOUNTED TOILET
02.07	(E) ACCESSIBLE URINAL
02.08	(E) FLOOR MOUNTED TOILET
02.09	(E) URINAL
02.10	(E) SINK
02.11	(N) ACCESSIBLE RESTROOM WALL SIGNAGE COMPLIANT PER 13/A10.40
02.12	(E) TOILET TISSUE DISPENSER TO BE RELOCATED TO COMPLY WITH 05/7G0.31.
02.13	E) TOILET PARTITION DOOR TO BE REPLACED.
02.14	(N) 36" GRAB BARS TO COMPLY.
02.16	E) TOILET PARTITION DOOR TO BE REPLACED AND SWING OUT TO COMPLY. (N) PARTITION TO MATCH EXISTING.

LEGEND

- N.I.C., EXISTING TO REMAIN PROTECT IN PLACE U.N.O.
- (N) WOOD FLOOR ASSEMBLY. PATTERN NOT TO SCALE, FOR REFERENCE ONLY.
- KEYNOTE TAG - SEE KEYNOTE LEGEND
- EXISTING WALL TO REMAIN, PROTECT IN PLACE
- NEW METAL STUD WALL CONSTRUCTION
- (E) DOOR TO REMAIN; PROTECT IN PLACE

RESTROOM ACCESSORIES SCHEDULE

TAG #	DESCRIPTION	COMMENTS
A	(E) BOBRICK B-2890 TOILET TISSUE DISPENSER	COMPLIANT
C	(E) BORICK B-9221 SEAT COVER DISPENSER	COMPLIANT
D	(E) BOBRICK B-2111 CLASSIC SERIES SURFACE MOUNTED SOAP DISPENSER	COMPLIANT
F	(E) MIRROR	COMPLIANT
G	(E) 36" GRAB BAR	COMPLIANT
H	(E) 42" GRAB BAR	COMPLIANT
Q	(E) XLERATOR HAND DRYER XL-SB	COMPLIANT

GENERAL NOTES

1. PATCH ALL SURFACES AND PROVIDE FINISH TO MATCH ADJACENT AS REQUIRED FOR ALL DEMOLITOIN AND INSTALLATION WORK. IN CASE OF WALL PANEL REPLACEMENT ENTIRE MASONITE OR DRYWALL PANEL IS TO BE REPLACED.
2. ALL FIRE EXTINGUISHERS SHALL BE FM APPROVED & SHALL BEAR THE FM SEAL OF APPROVAL.
3. CONTRACTOR TO FIELD VERIFY ALL EXISTING CONDTIONS AND REPORT ALL DISCREPANCIES TO THE ARCHITECT.
4. ALL WALLS, EXPOSED CEILING, TRUSSES, AND STRUCTURAL ELEMENTS TO BE PAINTED P1, U.N.O.
5. PROVIDE NEW WALL BASE B1 AT WOOD FLOOR LOCATIONS.
6. PROTECT IN PLACE EXISTING TILE WALL FINISHES AND RUBBER WALL BASE AT OTHER LOCATIONS.
7. (E) SPORTS BANNERS AND AWARDS TO BE REMOVED AND RE-INSTALLED. COORDINTATE WITH SITE FOR STORAGE LOCATIONS DURING CONSTRUCTION.
8. ALL (E) WALL GRAPHICS TO REMAIN AND BE PROTECTED IN PLACE.
9. ASSISTIVE-LISTENING SYSTEM SHALL BE PROVIDED IN ACCORDANCE WITH CBC SECTION 11B-219 AND SHALL COMPY WITH CBC SECTION 11B-706. THE MINIMUM NUMBER OF RECEIVERS TO BE PROVIDED SHALL BE EQUAL TO 4% OF THE TOTAL NUMBER OF SEATS, BUT IN NO CASE LESS THAN TWO. 25% MINIMUM OF THE RECEIVERS PROVIDED, BUT NO LESS THAN TWO, SHALL BE HEARING-AID COMPATIBLE IN ACCORDANCE WITH CBC SECTION 11B-706.3. IF THE SYSTEM PROVIDED IS LIMITED TO SPECIFIC AREAS OR SEATS, THEN SUCH AREAS OR SEATS SHALL BE WITHIN A 50-FOOT VIEWING DISTANCE OF, AND HAVE A COMPLETE VIEW OF, THE STAGE OR PLAYING AREA. CBC SECTION 11B-219.4.
10. PROVIDE EACH ASSEMBLY AREA WITH A SIGN WHICH INCLUDES THE SYMBOL FOR HEARING LOSS IN COMPLIANCE WITH 11B-216.10 & 11B-703.7.2.4, RE: 06/A10.40

LPA
ARCHITECTURE ENGINEERING INTERIOR DESIGN
LANDSCAPE ARCHITECTURE PLANNING
949-261-1001 Office
LPADesignStudios.com
5301 California Avenue, Suite 100
Irvine, California 92617

LICENSED ARCHITECT NICOLE METTLER C30850 9/30/2027 RENEWAL DATE STATE OF CALIFORNIA

This document and all other project documents, ideas, aesthetics and designs incorporated therein are instruments of service. All project documents are copyright protected, are the property of LPA, Inc. (LPA) and cannot be lawfully used in whole or in part for any project or purpose except as set forth in the contractual agreement between LPA and its Client. The unauthorized disclosure and/or use of the project documents (including the creation of derivative works), may give rise to liability for copyright infringement, unlawful disclosure, use or misappropriation of property rights held by LPA. The unauthorized use of the project documents will give rise to the recovery of monetary losses and damages including attorney fees and costs for which the unauthorized user will be held liable.
Project documents describe the design intent of the work and are not a representation of as-built or existing conditions. LPA is not responsible for any discrepancies between the project documents and the existing conditions.

© LPA, Inc.

ALTADENA ARTS MAGNET SCHOOL

743 E. CALAVERA ST.,
ALTADENA CA 91001

Developed for
PASADENA UNIFIED SCHOOL DISTRICT

Revision	Date

Submittal	Date
DSA SUBMITTAL	02/02/2026
DSA SUBMITTAL V2	03/13/2026

Job Number	33366
Checked By	Checker
Scale	As indicated

EXISTING CONDITIONS FLOOR PLAN

A1.01

GENERAL NOTES:

1. CHARACTER TYPE AND SIZE:

CHARACTERS ON SIGNS SHALL BE RAISED 1/32", UPPER CASE, "FUTURA MEDIUM" TYPE AND SHALL BE ACCOMPANIED WITH CALIFORNIA GRADE II BRAILLE. RAISED CHARACTERS SHALL BE AT LEAST 5/8" HIGH, BUT NO HIGHER THAN 2".

2. BRAILLE STANDARD DIMENSIONS:

CALIFORNIA GRADE II BRAILLE SHALL BE USED WHEREVER BRAILLE IS REQUIRED. INDIVIDUAL BRAILLE DOTS SHALL EACH BE DISTINCT AND SEPARATE. EACH DOT SHALL BE ROUNDED OR DOMED IN LIEU OR SQUARE AND FLAT TOPPED. DOTS SHALL BE RAISED A MINIMUM OF 1/40" ABOVE THE BACKGROUND. 2/10" SPACE BETWEEN CELLS (LETTERS)

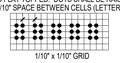

1/10" x 1/10" GRID

3. FINISH AND CONTRAST:

CHARACTERS, SYMBOLS AND THEIR BACKGROUNDS SHALL HAVE A NON-GLARE FINISH AND CONTRAST 70% MIN. WITH THEIR BACKGROUNDS. ISA (SYMBOL) IS REQUIRED TO BE BLUE 15090 PER FED STD 595C PER 11B-703.7.2.1.
CHARACTERS & SYMBOLS - COLOR TO MATCH EXISTING SIGNAGE IN THE GYM
BACKGROUND - COLOR TO MATCH EXISTING SIGNAGE IN THE GYM (COLOR OF VISUAL SIGNS SHALL PROVIDE CLEAR CONTRAST. IF USED FOR THE GEOMETRIC DOOR SYMBOLS, COLOR SHALL CONTRAST WITH THE DOOR COLOR).
PANEL - 1/4" THICK ACRYLIC PANEL WITH PHOTO POLYMER RAISED TACTILE COPY
SUB-SURFACE SYMBOL (U.N.O.)

4. PROPORTIONS:

CHARACTERS SHALL BE SELECTED FROM FONTS WHERE THE WIDTH OF THE UPPERCASE LETTER "O" IS 60% MIN. AND 110% MAX. OF THE HEIGHT OF THE UPPERCASE LETTER "I." STROKE THICKNESS OF THE UPPERCASE LETTER "I" SHALL BE 10% MIN. & 15% MAX. OF THE HEIGHT OF THE CHARACTER, 11B-703.2.4, 11B-703.2.6, 11B-703.5.7

5. EXTERIOR SIGNS SHALL BE METAL COMPONENTS SUITABLE TO EXTERIOR USE AND SIMILAR TO INTERIOR SIGNS FOR SHAPE AND FORM.

6. CONTRACTOR TO SUBMIT A SCHEDULE TO VERIFY ALL PERMANENT NUMBERS AND TEXT PRIOR TO FABRICATION.

7. SIGNAGE SHALL COMPLY WITH CBC SECTION 11B-703.

CROSS SECTION VISUAL/TACTILE CHARACTERS

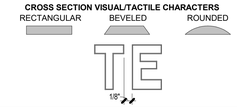

TABLE 11B-703.3.1
BRAILLE DIMENSIONS

MEASUREMENT RANGE	MINIMUM IN INCHES (MAXIMUM IN INCHES)
Dot base diameter	0.059 (1.5 mm) to 0.063 (1.6 mm)
Distance between two dots in the same cell[1]	0.100 (2.5 mm)
Distance between corresponding dots in adjacent cells[1]	0.300 (7.6 mm)
Dot height	0.025 (0.6 mm) to 0.037 (0.9 mm)
Distance between corresponding dots from one cell directly below[1]	0.395 (10 mm) to 0.400 (10.2 mm)

1. Measured center-to-center.

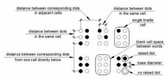

FIGURE 11B-703.3.1
BRAILLE MEASUREMENT

BRAILLE CHARACTERS

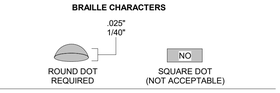

FONT RATIO

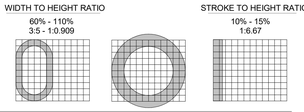

CONTRAST

MINIMUM 70% CONTRAST DIFFERENCE BETWEEN CHARACTERS/GRAPHICS AND BACKGROUND

0% WHITE ON 100% BACK-GROUND | 0% WHITE ON 70% BACK-GROUND | 30% TEXT CONTRAST ON 100% BACK-GROUND | 15% TEXT CONTRAST ON 100% BACK-GROUND

ASSISTIVE LISTENING SYSTEM REQUIREMENTS
MAIN COURT RM. #D-26 = 536 OCC. x 4% = 1 RECEIVER
TOTAL RECEIVERS REQUIRED = 22

PRACTICE AREA RM. #D-22 = 831 OCC. x 4% = 1 RECEIVER
TOTAL RECEIVERS REQUIRED = 34

PRACTICE AREA RM. #D-37 = 831 OCC. x 4% = 1 RECEIVER
TOTAL RECEIVERS REQUIRED = 34

HEARING AID COMPATIBLE RECEIVERS = 90

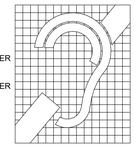

SYMBOL PROPORTIONS

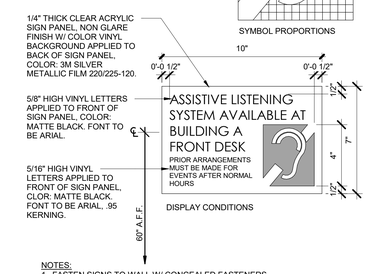

DISPLAY CONDITIONS

NOTES:
1. FASTEN SIGNS TO WALL W/ CONCEALED FASTENERS.

SIGN TYPE K | 3" = 1'-0" | A10.40 | 06

STATE FIRE MARSHAL
NOTES:
CALIFORNIA BUILDING CODE, SECTION 1013.4 RAISED CHARACTER AND BRAILLE EXIT SIGNS

TACTILE EXIT SIGNS SHALL BE REQUIRED AT THE FOLLOWING LOCATIONS:

1. "EXIT" SIGN @ EACH GRADE LEVEL EXTERIOR EXIT DOOR.
2. EACH EXIT DOOR THAT LEADS DIRECTLY TO A GRADE-LEVEL EXTERIOR EXIST BY MEANS OF A STAIRWAY OR RAMP SHALL BE IDENTIFIED BY A TACTILE EXIT SIGN WITH THE FOLLOWING WORDS AS APPROPRIATE: "EXIT STAIR DOWN," "EXIT RAMP DOWN," "EXIT STAIR UP," OR "EXIT RAMP UP"
3. "EXIT ROUTE" SIGN @ EACH EXIT DOOR THAT LEADS DIRECTLY TO A GRADE LEVEL EXTERIOR EXIT BY MEANS OF AN EXIT ENCLOSURE OR AN EXIT PASSAGEWAY.
4. "EXIT ROUTE" SIGN @ EACH EXIT ACCESS DOOR FROM AN INTERIOR ROOM OR AREA TO A CORRIDOR OR HALLWAY THAT IS REQUIRED TO HAVE VISUAL EXIT SIGNS.
5. "TO EXIT" SIGN @ EACH EXIT ACCESS DOOR THROUGH A HORIZONTAL EXIT.

NOTE:
* SIGNAGE SHALL COMPLY WITH CBC SECTION 11B-703
* SIGNAGE SHALL COMPLY WITH CFC SECTION 1011.4

SIGNAGE GENERAL NOTES | 12" = 1'-0" | A10.40 | 02

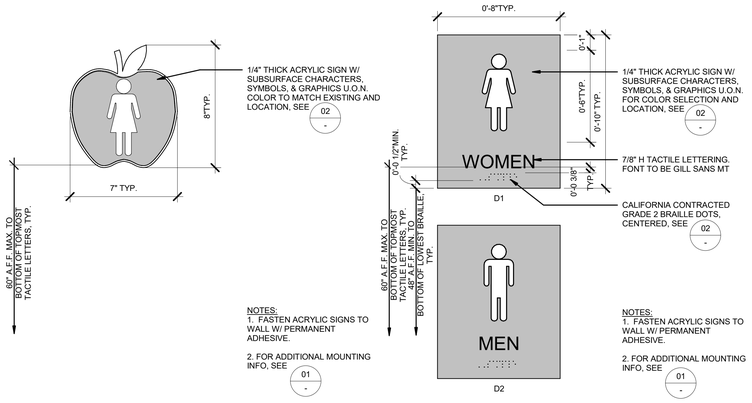

NOTES:
1. FASTEN ACRYLIC SIGNS TO WALL W/ PERMANENT ADHESIVE.

2. FOR ADDITIONAL MOUNTING INFO, SEE 01

SIGN TYPE E | 3" = 1'-0" | A10.40 | 13

NOTES:
1. FASTEN ACRYLIC SIGNS TO WALL W/ PERMANENT ADHESIVE.

2. FOR ADDITIONAL MOUNTING INFO, SEE 01

SIGN TYPE D | 3" = 1'-0" | A10.40 | 09

NOTES:
1. (E) SIGNAGE COLORS SHALL CONTRAST WITH THE (E) DOOR COLOR

2. FOR ADDITIONAL INFORMATION REGARDING COLOR SELECTION AND LOCATION SEE DETAIL **02/-**

3. (E) DOOR SIGNAGE ARE EASED EDGES, TYP

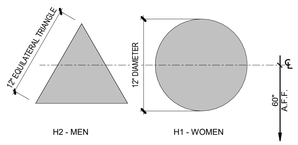

SIGN TYPE H | 1 1/2" = 1'-0" | A10.40 | 05

NOTES:
1. STATE OF CALIFORNIA LAW PROVIDES THAT "ALL BUILDING ENTRANCES THAT ARE ACCESSIBLE TO, AND USABLE BY PHYSICALLY DISABLED PERSONS SHALL BE INDENTIFIED WITH AT LEAST ONE STANDARD INTERNATIONAL SYMBOL OF ACCESSIBILITY ENTRANCE SIGN. STATE OF CALIFORNIA SENATE BILL NO. 1242 ALSO REQUIRES THAT ALL BUILDINGS, ROOMS, SPACES, ELEVATORS, ETC. BE PROVIDED WITH TACTILE IDENTIFICATION SIGNAGE PER CALIFORNIA BUILDING CODE.
2. LOCATE SIGN OUTSIDE OF DOOR ENTERING ROOM ADJACENT TO THE LATCH SIDE OF THE DOOR PER PLAN, AT LOCATIONS WHERE GLASS OCCURS, SUCH AS A SIDELITE. PROVIDE AN LTV VINYL BACKER, CUT TO SAME SIZE AS SIGN, MOUNTED TO OPPOSITE SIDE OF GLASS TO OBSCURE BACK SIDE OF SIGN. COLOR TO MATCH SIGN.
3. EXIT SIGNS SHALL BE MOUNTED BACK TO BACK AT SIDELIGHT CONDITIONS, TO CONCEAL VHB TAPE AND SILICONE MOUNTING.
4. WHERE THERE IS NO WALL SPACE ON THE LATCH SIDE, INCLUDING THE DOUBLE LEAF DOORS, SIGN SHALL BE PLACED ON THE NEAREST ADJACENT WALL, PREFERABLY ON THE RIGHT. MOUNTING LOCATION SHALL BE DETERMINED SO THAT A PERSON MAY APPROACH WITHIN 3 INCHES OF SIGNAGE WITHOUT ENCOUNTERING PROTRUDING OBJECTS OR STANDING WITHIN THE SWING OF A DOOR.
5. FASTEN SIGNS TO DOOR AND WALL WITH CONCEALED FASTENERS.

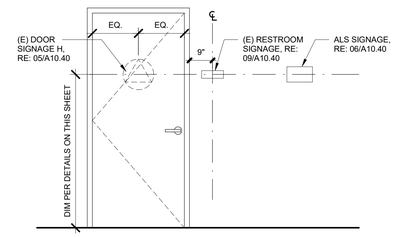

NOTE: SIGNAGE MOUNTING LOCATIONS & HEIGHT SHALL COMPLY WITH CBC SECTION 11B-703.4.1

MOUNTING HEIGHTS | 1/2" = 1'-0" | A10.40 | 01

LPA
ARCHITECTURE ENGINEERING INTERIOR DESIGN
LANDSCAPE ARCHITECTURE PLANNING
949-261-1001 Office
LPADesignStudios.com
5301 California Avenue, Suite 100
Irvine, California 92617

LICENSED ARCHITECT NICOLE METTLER C30850 9/30/2027 RENEWAL DATE STATE OF CALIFORNIA

This document and all other project documents, ideas, aesthetics and designs incorporated therein are instruments of service. All project documents are copyright protected, are the property of LPA, Inc. (LPA) and cannot be lawfully used in whole or in part for any project or purpose except as set forth in the contractual agreement between LPA and its Client. The unauthorized disclosure and/or use of the project documents (including the creation of derivative works), may give rise to liability for copyright infringement, unlawful disclosure, use or misappropriation of property rights held by LPA. The unauthorized use of the project documents will give rise to the recovery of monetary losses and damages including attorney fees and costs for which the unauthorized user will be held liable.
Project documents describe the design intent of the work and are not a representation of as-built or existing conditions. LPA is not responsible for any discrepancies between the project documents and the existing conditions.

© LPA, Inc.

ALTADENA ARTS MAGNET SCHOOL

743 E. CALAVERA ST,
ALTADENA CA 91001

Developed for
PASADENA UNIFIED SCHOOL DISTRICT

Revision	Date

Submittal	Date
DSA SUBMITTAL	02/02/2026
DSA SUBMITTAL V2	03/13/2026

Job Number	33366
Checked By	Checker
Scale	

SIGNAGE DETAILS

A10.40

STRUCTURAL STEEL

1. Provide readily identifiable structural steel compliant with Applicable Code Section 2202A.1.

2. Structural Steel: Furnish structural steel complying with the following ASTM standard specifications unless noted otherwise:

Use/Shape	Type/Grade	GWP Limit (unfabricated) (MT CO_2e/MT)	Notes
Wide Flanges and Channels	ASTM A992, Grade 50	1.01	
Angles	ASTM A572, Grade 50	1.01	
Plates	ASTM A572, Grade 50	1.49	
Hollow Structural Sections (rectangular and round)	ASTM A500, Grade C (50 ksi)	1.71	
Pipes:	ASTM A53, Grade B (35 ksi)		
Anchor Rods:	ASTM F1554, Grade 55		Weldable All Threaded
Headed Anchor Bolts	ASTM F1554, Grade 55		Weldable

3. Holes for Bolted Connections and Anchor Rods: AISC "standard" holes, unless noted otherwise. See note below for oversized holes for anchor rods in non-frame base plates.

4. High Strength Bolts, Nuts and Washers: AISC "Specification for Structural Joints Using High-Strength Bolts."
   A. Hardened Washers: ASTM F436, under nuts, except where plate washers are used. Provide beveled washers where joint face slope is greater than 1:20.
   B. Tightening: Snug tight for all high-strength bolts except tighten A325-SC and A490-SC bolts to at least the minimum proper tension according to the AISC Specification.
   C. Provide Class A Faying Surface or better at bolted connections indicated with "SC" type bolts.
   D. All bolts that are part of the "Seismic Force Resisting System" shall be "SC" type bolts.

5. Welding:
   A. Applicable Welding Standard: Applicable Code and latest adopted edition of AWS D1.1 and D1.8.
   B. Pre-qualified and Non-Pre-qualified Welds: Welds shall be pre-qualified in compliance with Applicable Welding Standard. Where non-pre-qualified welds are to be used, qualify by test and procedure qualification test record complying with Applicable Welding Standard.
   C. Work performed by Welders and Inspectors: Adhere to approved Welding Procedure Specification (WPS). Each welder and inspector shall retain a copy of WPS.
   D. Pre-construction Meeting: Conduct to include Architect (Structural Engineer), fabricator, erector, Contractor and inspectors to discuss Welding Procedure Specification (WPS).
   E. Welding Procedure Specification (WPS): The fabricator/erector shall develop a WPS in compliance with the Applicable Welding Standard. Submit the WPS to the Architect (Structural Engineer) for record before fabrication.. Procedures submitted shall result in completed connections that comply with the design intent of structural drawings. No deviation from structural drawings is permitted unless otherwise accepted by Architect (Structural Engineer) and approved by Governing Code Authority.
   F. Welding Electrode (Filler Metal): E70xx (70 ksi), UNO. Use low hydrogen electrodes only.
      a. Provide filler metal with Charpy V-notch toughness of 20 ft/lbs at or lower than 0°F as determined by the appropriate AWS classification test method. See REINFORCING STEEL for electrodes at reinforcing bar to reinforcing bar, UNO.
      b. Complete penetration welds: provide filler metal with Charpy V-notch toughness of 20 ft/lbs at -20°F.
      c. Welds indicated as "Demand Critical" (DC) shall comply with AISC 341 sections A3.4b and I2.3. These welded connections shall be made with a filler metal achieving a minimum Charpy V-notch toughness of 20ft/lbs at or lower than 0°F and 40ft/lbs at or lower than +70°F.
   G. Welding Toughness Requirements: Certify conformance to Charpy V-notch toughness requirements with tests by an independent testing laboratory for each AWS classification, manufacturer and trade name. Testing procedures shall be in accordance to Applicable Welding Standard and AWS D1.8.
   H. Fabricators: Perform shop welds by fabricators approved by LA City or AISC.
      a. Welder Qualification: Welders, regardless if Work is performed in shop or in field, shall be qualified for the Work they will be doing and shall have certifications current and acceptable to Governing Code Authority.
      b. Special inspection shall be required for all welding, as required by governing code authority.
   I. Welds Exposed to View:
      a. Faces of fillet welds exposed to view shall have as-welded surfaces that are reasonably smooth and uniform. No finishing or grinding shall be required, except where clearances or fit of other items may so necessitate.
      b. Partial and full penetration welds exposed to view shall be ground smooth and flush with finish surface of steel. Remove backup bars and weld tabs. Fill holes with weld metal or body solder and smooth by grinding or filing.
   J. Groove Preparation: Clean groove preparation thermal cuts by grinding.
   K. Termination of Welds: Terminate at joint ends in a manner that ensures sound welds. Use extension bars and run-off tabs whenever necessary.
   L. Hand-held Calibrated Amp and Volt Meters: To be used by fabricator, erector and inspectors to assure proper amperage and voltage of welding process. Measure amperage and voltage at arc. Verify travel speed and electrode stick-out in compliance with electrode manufacturer's recommendations and with approved WPS.
   M. Storage of Electrodes: Adhere to Section 5.3 of AWS D1.1.
   N. Weld each flange of moment frame beam to column connections in one continuous process without cooling below pre-heat temperature.
   O. Welding of ASTM A913 Materials: Perform according to requirements of latest edition of AWS standard, structural drawings and specifications, whichever is more stringent.
   P. Minimum Fillet Weld Size: Where minimum fillet weld size, as stipulated by AISC Section J2 and Table J2.4, exceeds fillet weld size indicated on structural drawings, use AISC stipulated size.
   Q. Minimum Groove or Butt Weld Size: Provide complete penetration unless indicated otherwise.
   R. Minimum Flare Bevel Weld Size: Provide weld flush to outside face of surface unless indicated otherwise.
   S. Weld Length: Length of welds shown are net effective lengths. Where length of weld is not indicated, provide weld full length of joint.
   T. Welding at Galvanized Steel: Galvanization shall be ground off prior to welding. Repair galvanization after completion of welding.

6. Shop Drawings: Submit To Architect (Structural Engineer) for review and, upon request, to Governing Code Authority. Include sequence of erection procedures from approved WPS:

7. Sustainable Design Submittals: Submit type III factory-specific or product-specific environmental product declaration (EPD) for each of the following products:
   A. Hot Rolled Structural Steel
   B. Hollow Structural Steel
   C. Steel Plate

8. Fabrication: Perform in shop approved by LA City or AISC
   A. Moment Connections: Orient flange stiffener plates and cap plates used in moment connections so that rolling direction of plate is parallel with direction of principal stress.
   B. Horizontal Members: Place natural camber up.
   C. Filler Plates: Provide at splices of parts having more than 1/8-inch difference in thickness. Filler plates to match grade of material spliced.

9. Traceability:
   A. Material tracing is required for all steel including miscellaneous metals, connectors, and steel products manufactured by third parties. The contractor is advised that material tracing is required as directed by DSA and the project inspection team and may include any or all of the levels of traceability described below:
      a. Lot traceability: materials can be traced to the set of mill test reports (MTRs) for the project.
      b. Piece-mark traceability: heat number can be correlated to each piece mark.
      c. Piece traceability: heat number can be correlated for each piece, which requires separate piece marks for each piece, or marking of each individual piece with its heat number.
   B. Prior to placing the mill order, the contractor shall schedule a preconstruction meeting to include the AOR, SEOR, PI and inspectors responsible for inspection of the steel material fabrication and erection/installation for the purpose of reviewing material traceability requirements.
   C. The contractor shall include the cost of piece traceability in their basic services and provide deductive alternates for piece-mark and lot traceability to be provided as a credit to the Owner.

10. Cleaning: After fabrication, clean steel surfaces free of rust, loose mill scale, and oil.

11. Oversized Holes for Anchor Rods in Non-Frame Column Base Plates: Oversized holes in the base plate may be provided at the contractor's option in accordance with AISC Table 14-2 UNO. Where oversized holes are provided, provide a plate washer with a standard hole with a minimum size per AISC Table 14-2 (3/8" thick min) UNO.

12. Exposure to Soil: Encase structural steel in lean concrete with 4 inches of concrete cover where exposed to soil.

13. Exposure to Weather: UNO, All structural steel (including connection elements) exposed to weather shall be hot dipped galvanized or coated in high performance exterior grade paint. Coordinate finishes with architect at AESS. At welding on galvanized or painted members, remove and repair galvanization or paint as required.

14. Exposure to View: All structural steel (including connection elements) exposed to view in the completed structure shall be designated Architecturally Exposed Structural Steel (AESS) UNO. AESS classification of members, unless a more restrictive class is indicated in Architectural drawings or project specifications, shall be as follows:
   A. All Exposed Steel, UNO: AESS-1

15. Heavy Sections
   A. Heavy sections shall comply with AISC 360-16 Section A3.1c
   B. Heavy sections forming part of the "SFRS" shall also comply with AISC 341-16 Section A3.3
   C. Welded Splices, including welds to baseplates shall comply with AISC 360-16 Section J1.5

16. See QUALITY ASSURANCE general notes for non-destructive testing.

17. SFRS denotes items considered part of the "SEISMIC FORCE RESISTING SYSTEM" (Refer to AISC 341-16 and AWS D1.8).

18. DC denotes welds considered "DEMAND CRITICAL" per AISC 341-16 Section A3.4B and I2.3.

19. Field weld flag symbols indicate design intent but are not requirements. Whether a weld is to be made in the shop or in the field is means and methods to be coordinated by the contractor.

20. Where bent plates specified cannot be bent due to thickness, provide two plate pieces joined with a complete penetration weld.

CAST-IN-PLACE CONCRETE

1. Concrete mixing shall comply with ASTM C94.

2. Hydraulic Cement, see table for types:
   A. ASTM C595
   B. Alternatively, ASTM C150 type II/V.

3. Aggregates:
   A. Normal Weight Concrete Aggregate (NW): ASTM C33 for aggregates of natural sand and rock. The maximum aggregate size is noted in the table below. The maximum dry density shall be 145 pcf.
      a. Where smaller aggregate is required for workability or areas of congestion, the contractor shall submit a request to the structural engineer prior to submitting the mix design. Pea gravel is not permitted.
   B. Light Weight Aggregate (LW) for Structural Concrete: ASTM C330, expanded shale lightweight aggregate. The maximum dry density shall be 115 pcf.
   C. Alkali Aggregates: Aggregate shall be non-reactive per ASTM C1778.

4. See the table below for the required concrete properties:

Class	Use/Location	Strength (psi) 28-Day	Agg Type	Max Agg Size (in)	Slump (in)	Max w/c	Target Air %	ASTM C595 Type	Exposure Category	GWP Limit $kgCO_2e/m^3$
A	UNLESS NOTED OTHERWISE	4,000	NW	1	3-5	0.5	--	IL	F0,S0	324
B	PIERS / CAISSONS	4,000	NW	1 1/2	5-7	0.6	--	IL	F0,S0	280

5. Slump: Per ACI 301, CH. 4 and CBC section 1705A.3. The specified slump above is measured before applying chemical add mixtures. The slump may be increased at the contractor's option for workability and should be noted in the mix design submittal.

6. Global Warming Potential (GWP): as defined in the specifications.
   A. Concrete may be considered one product category to comply with the GWP Limit. A weighted average of the maximum GWP for all concrete mixes installed in the project shall be less than the weighted average maximum GWP as specified above. Calculations shall be submitted for approval.

7. Air content shall be +/- 1.5 percentage points from the specified target air content in the table above.

8. All concrete above grade, including slab on grade, deck fill, wall, topping slab, stair landing and tread, shall have 1.5 pounds of 3/4" long fibrous reinforcing per cubic yard of concrete.

9. Lean Concrete: Where specifically indicated, containing 2 sacks of cement per cubic yard of concrete. Use only where specifically called for.

10. Non-shrink Grout: ASTM C1107, cementitious, non-metallic, attaining a compressive strength of 8000 psi.

11. Concrete Mix Design Submittal: Prior to ordering concrete, submit for each compressive strength and type of concrete required designed, mix designs signed, and sealed by a registered Civil or Structural Engineer in State of California to Architect (Structural Engineer), Special Inspector and to Governing Code Authority complying with California Building Code, Chapter 19.

12. Sustainable Design Submittals: For each concrete mix design to be used on site, submit a Type III factory-specific or product-specific environmental product declaration (EPD).

13. Construction Joint: Roughen surface to 1/4-inch amplitude. Clean, remove laitance, thoroughly wet and remove standing water before placing new concrete. Submit to the Architect (Structural Engineer) at least 14 days prior to placing concrete indicating locations of construction joints and extent of pours. Place joints at locations to minimize the effects of shrinkage as well as being placed at points that least impair the strength of the structure. Provide dowels as directed.

14. Embedments and Penetrations in Concrete: No penetration through structural concrete is permitted unless shown in these drawings or specifically accepted in writing by the Architect (Structural Engineer). Do not cut any reinforcing.
   A. Pipes, Sleeves, Conduits, and Ducts: Not permitted embedded or penetrating concrete spread footings, columns, walls or concrete cast over metal decking, except as shown in these drawings.
   B. Conduits Embedded in Structural Concrete Slabs: Not permitted unless limited to two layers of 1 inch, and 1/6 slab thickness. outside diameter conduits and smaller spaced at least 3 inches center to center and within middle third of slab thickness. No conduit embedded in concrete cast over metal decking is permitted. No aluminum conduit is permitted.

15. Chamfered Corners: Provide 3/4-inch chamfer at exposed corners of columns, beams and walls except where structural walls are laid flush with column or beam faces, unless detailed otherwise.

16. Curing: Maintain concrete above 50 degrees Fahrenheit and in a moist condition for a minimum of 7 days after placement unless otherwise accepted by the Architect (Structural Engineer).

17. Non-Structural Topping slab shall be normal weight concrete reinforced with 6x6-W3.5xW3.5 W.W.F. at the center line of the slab. See plans & details for information on concrete fill over metal deck.

18. The maximum size for a single elevated concrete slab pour shall be 25,000 sq. ft. and shall have a maximum length to depth ratio of 2:1.

19. The maximum water-soluble chloride ION (Cl) content in concrete by percentage of weight cement is 0.30.

20. Where "Styrofoam" or "EPS" is indicated on the drawings, provide expanded polystyrene conforming to ASTM D6817 Type EPS12 with the following physical properties.
   A. Density (min): 0.70 lb/ft^2
   B. Compressive Resistance (min): 2.2 psi @ 1% strain
   C. Flexural Strength (min): 10.0 psi

REINFORCING STEEL

1. Reinforcing Steel: All bars shall be deformed.Table Notes:

Use/Location	Type/Grade	GWP Limit (unfabricated) $MTCO_{2e}$/MT	Notes
Standard Bars (#3 thru #6)	ASTM A615, Grade 60	0.89	A
Standard Bars (#7 and larger)	ASTM A615, Grade 60	0.89	A
Bars to be welded (#3 thru #6)	ASTM A706, Grade 60	0.89	-
Bars to be welded (#7 and larger)	ASTM A706, Grade 60	0.89	-
Smooth WWF	ASTM A1064, Fy = 65 ksi	-	B
Deformed wire stirrups	ASTM A1064, Fy = 65 ksi	-	C
Spiral reinforcing	ASTM A1064, Fy = 65 ksi	-	-

   A. Additional Requirements for Bars, Excluding Ties, for vertical bars in Shear Walls:
      a. No additional requirements if ASTM A706 bars are used.
      b. ASTM A615 bars are permitted provided actual yield strength based on mill tests does not exceed specified yield strength by more than 18,000 psi (retests shall not exceed this value by more than an additional 3,000 psi) and ratio of actual ultimate tensile stress to actual yield stress is not less than 1.25.
   B. Provide WWF in flat sheets only - do not use rolled mesh. Lap 1-1/2 wire spaces (1 foot minimum).
   C. Only D4 and larger are allowed.
   D. MT = Metric ton

2. Reinforcing shall be placed in accordance with the American Concrete Institute Standard 318 (ACI318) and Concrete Reinforcing Steel Institute's (CRSI) "Manual of Standard Practice". Reinforcing shall be kept clean and free of rust.

3. Provide all accessories needed to support reinforcing in the positions shown in the drawings. Chairs and spacers for reinforcing shall be non-ferrous or plastic-coated when resting on exposed concrete surfaces.

4. Shop Drawings: ACI 318. Show reinforcing steel placement, including sizes, quantities, spacing, clearances, splice locations, lap lengths, and concrete coverage and submit to the Architect (Structural Engineer). Promptly notify the Architect (Structural Engineer) prior to developing shop drawings if insufficient clear distances between reinforcing steel and other congestion are encountered. Notify Special Inspector of adjustments made from approved Contract Documents which are indicated on accepted shop drawings that facilitate field placement of reinforcing steel and concrete. All bars shall be marked so that they can easily be identified by the project inspector after installation.

5. Sustainable Design Submittals: For each type and grade of reinforcing, submit a type III factory-specific or product-specific environmental product declaration (EPD).

6. Lap Splices: At concrete, Provide Class B splices per Typical Bar Development Schedules UNO. At masonry, provide 72db lap splice length UNO. Splice bars only at locations indicated. If additional splice locations are proposed, promptly notify the Architect (Structural Engineer) prior to developing shop drawings.
   A. Splices in Walls: Locate splices in horizontal bars at well-staggered locations. Do not splice vertical bars except at horizontal supports such as floor and roof diaphragms.

7. Mechanical and Welded Splice: Mechanical Splices and Welded Splices are to be used only at the indicated locations. Notify the Architect (Structural Engineer) of all instances prior to developing shop drawings.
   A. Mechanical Splice: Mechanical couplers shall have a current Evaluation Report and satisfy ACI requirements for type 2 couplers for the applicable bar size/grade designation.
   B. Welded Splice: Welded splice shall develop at least 125 percent of the yield strength of the spliced bar for the applicable bar size and grade designation.

8. Minimum Clearances Between Parallel Reinforcing Steel, Including Distance Between Sets of Spliced Bars: 1 inch, 1 bar diameter, or 4/3 times the maximum aggregate size, whichever is greater. 1-1/2 inches, 1-1/2 bar diameters, or 4/3 times the maximum aggregate size, whichever is greater, at columns, piers, and pilasters only. For bundled bars, minimum clear distances between units of bundled bars shall be the same as single bars, except bar diameter is derived from the equivalent total area of the bundle.

9. Specified Concrete Coverage: Place bars as near to the concrete surface as the following specified coverages and in accordance with ACI 117:
   A. Slabs on Grade — Locate at the center of slab.
   B. Slabs Supporting Earth Above — 1-1/2 inches from top.
   C. Formed Concrete Exposed to Earth or Weather — 1-1/2 inches (#5 and smaller); 2 inches (#6 and larger)
   D. Concrete Poured Against Earth (Unformed) — 3 inches
   E. Walls Above Grade, Exposed to Weather — 1-1/2 inches (#5 and smaller); 2 inches (#6 and larger)
   F. Walls Above Grade, Not Exposed to Weather — 3/4 inch (#11 and smaller); 1-1/2 inches (#14 and larger)
   G. Columns (Clear to Face of Ties) — 1-1/2 inches
   H. Beams (Clear to Face of Ties) — 1-1/2 inches
   I. Structural Slabs, Not Exposed to Weather (Top and Bottom) — 1 inch (#8 and smaller); 1db (#9 and larger)
   J. Structural Slabs, Exposed to Weather — 1-1/2 inches (#5 and smaller); 2 inches (#6 and larger)
   K. Structural Slabs over Void Forms — 1 inch (top #8 and smaller); 1 db (#9 and larger); 2 inches (bottom)

10. Dowels between foundations and vertical wall & column bars shall match the size, grade and spacing of the column up wall vertical reinforcing and be lapped with a class B lap splice, UNO.

11. Dowels at Construction Joints: Provide dowels matching size and quantity of reinforcing steel interrupted at construction joints, unless detailed otherwise.

12. Placement of Bars in Walls (unless detailed otherwise): Place vertical bars closest to wall surfaces at curtains containing vertical and horizontal bars of the same size. In curtains with vertical and horizontal bars of different sizes or spacing, place the layer with the most steel area closest to the near wall surface.

13. Bars Terminating at Walls, Columns, Beams, and Foundations: Extend bars to within 2 inches (3 inches at concrete poured against earth) of the far face of the wall, column, beam, or foundation and provide a standard hook unless detailed otherwise.

14. Bars Interrupted by Structural Steel: Extend bars within 2 inches of the steel face and provide a standard hook unless detailed otherwise.

15. Welding: AWS D1.4, edition adopted by applicable code.
   A. Acceptable Reinforcing Steel for Welding: ASTM A706. If welding of reinforcing steel other than A706 is desired, submit a proposed procedure, indicating conformance with the Applicable Code and requirements of the Governing Code Authority, to the Architect (Structural Engineer) for acceptance and to the Governing Code Authority for approval prior to execution.
   B. Rebar to rebar weld is not allowed except where specifically indicated on plans. Provide electrode E80XX (80 ksi) where permitted.
   C. Welder Certification: As required by the Governing Code Authority.

16. See welding notes in the Structural Steel Section of these notes for additional requirements.

17. Bending: Bend cold unless otherwise accepted by the Architect (Structural Engineer). Do not field-bend reinforcing steel bars embedded in concrete unless otherwise accepted in writing by the Architect (Structural Engineer).

18. In-plant fusion welding of holding wires to ties, stirrups and hoops in beams, columns and grade beams to preassemble reinforcing steel cages is permitted under the following conditions per CBC 2022 1903A.8:
   A. Fusion welding is not allowed to longitudinal reinforcing steel in any beam, column or grade beam. The holding wire area shall not exceed 5% of the beam, column or grade beam cross sectional longitudinal steel area.
   B. Fusion welding of holding wires to the ends of the reinforcing steel placed in mats (spread footings, slab reinforcement, etc.) provided the fusion weld occurs within 6 bar diameters of the free end of the bar (e g. not allowed at the end of coupled, t-headed or weld spliced bars).
   C. Fusion welding of holding wires shall not occur on a bent portion of a reinforcing bar. After holding wire has been fusion welded to a reinforcing bar, that bar may not be bent where the fusion weld occurs.
   D. Contractor to submit complete shop drawings indicating which members will use fusion welding process for preassembly. Provide complete details indicating the size of stirrups, holding wires and welding requirements.
   E. Holding wires shall conform to ASTM A1064.
   F. All reinforcing steel to be welded shall comply with ASTM A706 Grade 60.
      a. Contractor to submit complete shop welding program outlining the following: Type of specific fusion welding machine (i.e. Schnell IDEA 12/25 Machine, etc.)
      b. Periodic inspection of the in-plant welding.
   G. Fusion welded reinforcing steel shall have one tensile test taken from one specimen sampled at a rate of 2.5 tons or fraction thereof of each size of reinforcing steel fusion welded. No bend test is necessary. The specimen shall have a holding wire attached to it that need not be removed. The elongation requirements shall comply with the ASTM of reinforcing steel specified on the construction documents (e g. if A615 is specified, but A706 is used due to the welding requirement, then A615 elongation requirements shall be satisfied).
   H. The use of fusion welding shall conform to ACI 318-19 26.6.4.
   I. If field conditions result in conflicts with other structural members (ex. anchor bolts) the rebar must be relocated in the field to avoid said conflicts.

DESIGN LOADING

1. Loading and Design Parameters:
   A. Live Load
      a. Floor / Roof Live Load: Per CBC 1607A.1. See legends as provided on loading plan sheets.
         - Wood Bridge Floor Live Load: 100 psf
         - Roof Live Load: 20 psf
      b. Live Load Reduction:
         - Floor Live Load of 100 psf and below: General (Section 1607.12.1)
         - Floor Live Load over 100 psf: Non-Reducible
         - Roof Live Load: General (Section 1607.14.1)

   B. Wind Design Parameters
      Wind Speed Strength level, V: 101 MPH (STRENGTH)
      a. Wind Speed Allowable Stress, V_{asd}: 79 MPH (ASD)
      b. Risk Category: II
      c. Exposure: C
      d. Enclosure Classification: Site Screen

   C. Project Seismic Design Parameters:
      a. Site Class: D
      b. Mapped Spectral Acceleration (S_s, S_1): SS = 2.19, S1 = 0.73
      c. Site Specific Spectral Response Coefficient (S_{DS}, S_{D1}): SDS = 1.56, SD1 = 1.13
      d. Site Coefficient (F_a, F_v): XX, XX (respectively)
      e. Risk Category: II
      f. Seismic Importance Factor I_e: 1.0
      g. Seismic Design Category: D

DEFERRED SUBMITTAL ITEMS ANCHORED OR SUPPORTED BY STRUCTURE

1. Design Responsibility: Contractor to design and obtain separate AHJ approval for deferred approval items noted on Gx series sheets.

2. Shop Drawings and Structural Calculations: Submit design plans, details and calculations of deferred submittal items signed and sealed by a registered structural engineer registered in the state having jurisdiction to Architect (Structural Engineer) for acceptance and to AHJ for approval prior to fabrication.

3. Design: Design components for imposed forces, including lateral restraint, complying with the Applicable Code, Contract Documents, and applicable portions of AISI Specifications. If the building Seismic Force Resisting System (SFRS) is used for lateral restraint, indicate load paths to the building lateral resisting system in calculations and show connection forces on shop drawings. Where the building provides vertical support, indicate loads and load paths to the building in calculations and show connection forces on shop drawings. Dead load elements at the lowest level of connection uno Design loads are as follows:
   A. Dead load: Self-weight of the deferred system (including supported components of other systems).
   B. Live load: Per applicable code. See General Notes Section LOADS
   C. Seismic and wind loads: Per applicable code. See General Notes Section LOADS.
   D. Design Movement:
      a. Lateral Movement: See General Notes Section LOADS
      b. Vertical Movement: Live Load Deflection of L/360

4. Stabilizing Elements at Connections to Structural Members: Design connections of deferred submittal items to supporting structure such that torsion in supporting elements is avoided whenever possible. Where torsion in supporting element has resulted, provide beam bottom flange kicker brace per detail 17 or 18/S6.11 at each connection point.

QUALITY ASSURANCE (STRUCTURAL OBSERVATION, MATERIALS TESTING, and SPECIAL INSPECTION)

1. Structural Observation:
   A. The Architect (Structural Engineer) of record will visually observe the construction as required by CAC 4-333 and CAC 4.341 and in accordance with the governing code. These visual observations shall not be considered a substitute for special inspections.
   B. Coordination Responsibilities of Contractor: Notify the Architect (Structural Engineer) 48 hours in advance of critical stages of construction indicated below so visits may be scheduled by the Structural Observer. Failure by the Contractor to meet the observation schedule may require the removal of subsequent Work for observation. Contractor to bear costs of removal and replacement of finished Work or framing damaged by the removal process or as required for corrective action and for any associated scheduling delays.
      a. Critical stages of construction that require structural observation.
         - Prior to pouring the first foundation.
   C. Pre-construction Meeting: The owner may coordinate and call for a meeting between the Architect (Structural Engineer) responsible for structural design, the Structural Observer, the Contractor, affected subcontractors and the Special Inspector. Structural observer will preside over this meeting. Purpose of meeting is to identify major structural elements and connections that affect vertical and lateral load resisting systems of structure and to review schedule of Structural Observation, Materials Testing, and Special Inspection of Project.

2. Mill Test Reports Certifying Materials: The contractor shall submit mill test reports certifying reinforcing steel, and structural steel are of identifiable tested stock to the Owner, Special Inspector, Architect (Structural Engineer) and, upon request, to the AHJ. Ensure materials are properly tagged for identification. If mill test reports cannot be made available or if material cannot be identified, the Testing Laboratory will perform tests as directed by the Architect (Structural Engineer). The contractor shall pay the Testing Laboratory for costs related to tests and inspections of unidentifiable materials or materials furnished without mill test reports, materials found deficient after initial tests and inspections, or materials replacing deficient materials.
   A. Ultrasonic Examination of Heavy Rolled Shapes and Thick Plates at Proposed Welded Moment Connections: Where complete penetration groove welds occur at Groups 4 and 5 structural steel shapes, as defined in ASTM A6, and plates exceeding 2 inches thick, submit mill test reports to Architect (Structural Engineer) and, upon request, to Governing Code Authority. Mill test reports shall certify that Charpy V-notch testing was conducted in compliance with ASTM A6, Supplementary Requirement S5, including impact test complying with ASTM A673 at frequency P with a minimum average value of 20 ft.-lbs. absorbed energy at 70 degrees Fahrenheit.

3. Weld Testing and Inspection: Testing Laboratory will submit weld test results to Owner, Contractor, Architect (Structural Engineer) and to Governing Code Authority. See Specifications for testing requirements not indicated on structural drawings.
   A. Structural Steel Welding: Apart from visual inspection and review of fabrication and erection reports of fabricator/erector's own quality control testing and inspection, the Owner's Testing Laboratory will perform indicated shop and field inspection and testing. The Testing Laboratory will be AWS Q.C.-1 certified and will provide inspectors for continuous inspection of steel fabrication and erection and structural welding. Shop and field testing of materials and welding will be as follows:
      a. Ultrasonic testing (UT) is required for all (100%) complete penetration welds. Test groove welding on continuity plates by ultrasonic testing after beam flange weld connection. Testing shall be performed 24 hours or more after completion of welding. Weld backing removal areas and fillet welds shall be subjected to magnetic particle examination.
         - UT testing reduction: Where the initial rate for UT is 100%, the NDT rate for an individual welder or welding operator is permitted to be reduced to 25% provided that the number of welds containing unacceptable defects divided by the number of welds completed (reject rate) is 5% or less of the welds tested for the welder or welding operator. A sampling of at least 40 completed welds for a job shall be made for such reduction evaluation. See AISC 360-10 N5.5e and AISC 341 J6.2g for additional information.
         - UT Reduction is NOT permitted at demand critical welds.
         - Documentation: All Nondestructive Testing (NDT) performed shall be documented per AISC 360-16 N5.5g.
      b. Base metal thicker than 1-1/2 inches, subjected to through-thickness weld shrinkage, will be ultrasonically tested directly behind such welds after welds have cooled to ambient temperature.
      c. Welds shall be visually inspected and periodically measured (15 percent minimum).
      d. Check 10 percent of fillet welds by magnetic particle (ASTM 109 method). Check 25 percent of continuity plate fillet welds by magnetic particle, UNO. At continuity plates in moment connections (where CJP is used on one or more plate ends), 100 percent of fillet welds shall be tested by magnetic particles.
      e. Ultrasonically test column flanges located at proposed welded moment connections, continuity plates, doubler plates and base plates where column flange or plate thickness exceeds 1-1/2 inches. Test for evidence of laminations, inclusions or other discontinuities in accordance with ASTM A435, straight beam ultrasonic examination of steel plates, or ASTM A898, straight beam ultrasonic examination of rolled steel structural shapes, as applicable. Test zone to extend 6 inches above and below each beam flange connection. For plates, any discontinuity causing a total loss of back reflection not contained within a 3-inch diameter circle, or one-half thickness of the plate, whichever is greater, will be rejected. For rolled shapes, ASTM A898, Level I criteria apply. Testing will be performed on the material prior to fabrication, after fabrication, and after the final welding of the beam.
      f. k-Area welds shall be MT'd no sooner than 48 hours after completion of the weld.
      g. Amperage, voltage, polarity and electrode stick out will be verified for compliance with the electrode manufacturer's recommendations.

4. Special Inspection: Per DSA-103 and Chapter 17A of CBC.

GENERAL

1. Authority Having Jurisdiction (AHJ): Division of the State Architect (DSA SS)
   Applicable Building Code 2022 California Building Code (CBC) as modified by AHJ. References to industry standards herein shall be the latest edition as adopted by the Applicable Code.

2. Field Verification: Field verify the existing conditions and dimensions prior to construction. Promptly notify the Architect (Structural Engineer) in case of discrepancies.

3. Design Intent: Contract Documents indicate the design intent for the structure in its completed state. They do not indicate the method of construction. Promptly notify the Architect (Structural Engineer) prior to proceeding with the Work if the design intent requires further clarification.

4. Deviations, Modifications and Substitutions to Approved Structural Drawings: Must be accepted in writing by the Architect (Structural Engineer) and approved by AHJ. No deviation, modification or substitution will be accepted via shop drawing review.

5. Procedures of Construction: The contractor is responsible for procedures of construction that comply with national, state and local safety ordinances. Site visits (including Structural Observation) by the Architect (Structural Engineer) do not constitute supervision of the methods of construction.
   A. Protection of Utilities: Locate existing utilities, including those not shown on Contract Documents, and protect them from damage. The contractor bears the expense of repair or replacement of utilities in conjunction with the execution of Work.
   B. Excavations: Protect structure, adjacent structures, adjacent properties, streets, and utilities during excavation utilizing lagging, shoring, underpinning and related procedures as may be required. Provide necessary support for soil at the sides of excavations. The contractor and affected trades shall refer to the Geotechnical Report for more information.
   C. Protection of Structure: Provide necessary measures to protect the structure and adjacent buildings during the execution of Work.
   D. Contractor Proposed Revisions: Where a revision of structural design or connection is proposed by the Contractor to accommodate construction tolerances, construction sequence and/or dimension modifications, the Contractor shall retain a structural engineer licensed in the State having jurisdiction to perform design. Submit stamped and signed design drawings and calculations to the Architect (Structural Engineer) for review and to the AHJ for approval.
   E. Erection Plans: Determine phases of Work requiring erection plans according to applicable safety regulations. Maintain certified copies of erection plans at the site during construction.
   F. Shoring, Bracing, and Other Temporary Supports: Design and erect shoring, bracing, and other temporary supports where the structure has not attained design strength and as required for safe erection. Ensure floor, roof, and wall members are securely shored and braced during construction. Provide shoring at elevated beams and slabs supporting concrete or masonry walls during and after the wall pour until the wall attains design strength.
   G. Temporary Loading: Ensure construction loads do not exceed indicated design live load values. Notify affected sub-contractor trades of these design load limits.
   H. Fabrication, Shipment, and Erection of Structural Steel: Ensure stresses occurring during fabrication, shipment, and erection of structural steel are temporary and are less than the design and allowable stress capacities of individual members. Do not impair the full design and load-carrying capacity of members due to fabrication, shipment, or erection. The contractor is responsible for controlling the erection sequence, erection procedure, temperature differentials and weld shrinkage to minimize residue stresses. Provide additional materials for the erection of structural steel, such as temporary bracing and guy cables, as may be necessary at no additional cost. Remove these materials unless approved in writing by the Owner. Do not tighten bolts in typical beam to column connections for erection purposes.
   I. Securing Reinforcing Steel, Dowels, Anchor Bolts and Embeds: Firmly support and accurately place complying with ACI standards prior to casting concrete or grout in masonry walls. Use ties and support bars in addition to reinforcing steel shown where necessary. No welding of reinforcing steel, including tack welding, is permitted unless otherwise accepted in writing by the Architect (Structural Engineer). Provide plastic or plastic-coated chairs and spacers when resting on exposed surfaces.
   J. Coordination Responsibility: The Contractor is responsible for the coordination of Work, including that of sub-contractor trades.
   K. Core drilling of hardened concrete or masonry shall only be done after a specific review by the Architect (Structural Engineer). Core drilling shall not cut any reinforcing. Coverage for reinforcement, as described in these notes, shall be maintained at the locations of cores. Locate reinforcing by non-destructive methods as required.

6. Request for Information (RFI)/Request for Clarification (RFC): Accompany RFI/RFC's with partial structural foundation or framing plans showing the location in question and affected structural members. Copy partial plan from structural drawings and indicate grid line locations and floor level. Provide properly drawn engineering sketches illustrating issues and the Contractor's proposed solutions. Photographs are not acceptable substitutes for engineering sketches.

7. Submittals: Submit to the Architect (Structural Engineer) as indicated on structural drawings and specifications. The General Contractor shall review the submittal for completeness and compliance with Contract Documents prior to submission.
   A. Composite Slab Penetration Submittal: Submit to the Architect (Structural Engineer) for each floor indicating the size and location of each slab penetration and opening as necessary by all affected trades. Submit penetration plans together with corresponding metal decking or reinforcing steel shop drawings. Submit a written statement from the Special Inspector that no additional penetrations or openings were added to those shown in the penetration submittal.
   B. Composite Concrete and Masonry Wall Penetration Submittal: Submit to the Architect (Structural Engineer) for each wall indicating the size and location of each wall penetration, embed assembly, and opening by all trades. Submit penetration elevations together with corresponding reinforcing steel shop drawings, including locations of control and expansion joints. Submit a written statement from the Special Inspector that no additional penetrations or openings were added to those shown in the penetration submittal.

8. Contract Documents Use: Review Contract Documents in their entirety before performing structural-related Work and before developing shop drawings. Bring discrepancies to the immediate attention of the Architect (Structural Engineer) before starting Work.
   A. Scaling of Drawings: Not permitted.
   B. Additional Structural Requirements: See specifications.
   C. Building Geometry: See architectural drawings for building geometry including, but not limited to, top of floor and roof elevations; depressions; slopes; curbs; drains; trenches; slab and deck edge locations; wall overall dimensions; and size and locations of openings in floors, roof, and walls.
   D. Non-structural Items Requiring Special Provisions: See architectural, mechanical, plumbing, and electrical drawings for non-structural items requiring special provisions during construction. They include but are not limited to, non-structural walls; size and locations of openings and sleeves penetrating structure; size and location of concrete curbs and pads; and size and location of piping, ductwork, and equipment anchorages mounted or suspended from the structure. Verify the exact size and location of equipment with the equipment manufacturer.
      A. Work shown is new unless noted as existing thus, (E).
   E. Materials: Furnish and install in compliance with legally constituted public authorities having jurisdiction, including county and local ordinances and safety orders of the State Industrial Accident Commission, OHSA. The Architect (Structural Engineer) and Owner accept no responsibility for the contractor's failure to comply with these requirements.
   F. Penetrations, Embedments, and Openings in Structural Members: No penetration, embedment, opening, sleeve, pipe, or conduit shall occur in structural members, including footings, slabs, walls, columns, and beams unless specifically shown or indicated on structural drawings.
   G. Typical Details: Details on sheets indicated as typical are applicable throughout the Project wherever the described condition occurs and may or may not be specifically referenced on structural drawings. The contractor is responsible for identifying these details and understanding the extent of their application prior to performing Work. Details not shown or noted shall be similar to those shown for similar construction. The contractor shall submit RFI's for details such as this to the Architect (Structural Engineer) prior to proceeding with work.

9. Evaluation Report:
   A. References to Evaluation Reports for proprietary materials herein shall be the latest edition as adopted by Authority Having Jurisdiction (AHJ).
   B. For proprietary structural elements and products, the product is to hold an Evaluation Report in compliance with the applicable code for the product's intended use.
   C. Approved Evaluation Report Agencies:
      a. ICC (ICC-ES)
      b. IAPMO (IAPMO-ES)
      c. HCAI (OPM / OSP / OPD)
      d. City Of Los Angeles (COLA/RR)
      e. Miami-Dade (NOA)
      f. Other Agencies as noted in DSA IR A-5.

EARTHWORK and FOUNDATIONS

1. Geotechnical Report: Perform soil work complying with foundation design based on recommendations in report log no. / report number 25-3846; prepared by Koury Engineering & Testing, Inc.; dated January 22, 2026 and subsequent addenda letters. Maintain a copy of the report and all addenda on the site.

2. Grading, Excavations, Backfill and Compaction of Backfill: Comply with the Geotechnical Report and requirements of the Governing Code Authority and perform only under the Continuous Special Inspection of the geotechnical engineer. Building pads shall be over-excavated as recommended in the Geotechnical Report. If soft pockets are discovered during over-excavation, additional over-excavation will be required as directed by the Geotechnical Engineer.

3. Foundation Excavations: Footing foundations are to bear on approved compacted fill as indicated in the Geotechnical Report. Excavations are to be inspected by the geotechnical engineer prior to the placement of reinforcing steel and formwork. Ensure excavations are clean, dry and free of debris or loose soil. Slope sides of excavation not less than minimum slope indicated in Geotechnical Report. Cast concrete directly against excavated surfaces as soon as possible. Do not allow water in beam trenches or footing excavations after final compaction and before concrete placement.

4. Allowable Site Footing/Piles Foundation Design Values per Geotechnical Report.
   A. Bearing Capacity: 1500 psf, for min. 1'-0" wide minor shallow foundations with 1'-3" min. embedment. Values may be increased by 20% for transient loading.
   B. Passive Lateral Bearing Pressure: 200 psf/ft. Values may be increased by 20% for transient loading.
   C. Coefficient of Friction: 0.3.
   D. Combined Lateral Resistance : The frictional resistance and the passive resistance of the soil may be combined provided that the passive resistance is reduced by one third.

5. Backfilling of Retaining Walls: Place after completion and inspection of waterproofing. Adequately shore retaining walls during backfill operation. Unless adequately shored, do not place backfill behind building structure retaining walls until concrete at elevated floor levels adjacent to walls is completely poured and has cured for at least 7 days at site walls; concrete shall reach full design strength prior to backfilling unless adequately shored.

6. Retaining Wall Design Values:
   A. Bearing Capacity: 2000 psf. Values may be increased by one third for wind and seismic loading.
   B. Active earth pressure: 40 pcf (triangular) At Level Backfill
   C. At-rest earth pressure: 63 pcf (triangular) At Level Backfill
   D. Passive Lateral Bearing Pressure: 200 psf/ft. Values may be increased by 1/3 for transient loading.
   E. Coefficient of Friction: 0.3.

IDENTIFICATION STAMP
DIV. OF THE STATE ARCHITECT
APP: 03-125900 INC:
REVIEWED FOR
SS ☑ FLS ☑ ACS ☑
DATE: 03/18/2026

LPA

ARCHITECTURE ENGINEERING INTERIOR DESIGN LANDSCAPE ARCHITECTURE PLANNING

949-261-1001 Office

LPADesignStudios.com

5301 California Avenue, Suite 100
Irvine, California 92617

REGISTERED PROFESSIONAL ENGINEER
DANIEL S. WANG
No. S4453
Exp. 12/31/26
STRUCTURAL
STATE OF CALIFORNIA

This document and all other project documents, ideas, aesthetics and designs incorporated therein are instruments of service. All project documents are copyright protected, are the property of LPA, Inc. (LPA) and cannot be lawfully used in whole or in part for any project or purpose except as set forth in the contractual agreement between LPA and its Client. The unauthorized disclosure and/or use of the project documents (including the creation of derivative works), may give rise to liability for copyright infringement, unlawful disclosure, use or misappropriation of property rights held by LPA. The unauthorized use of the project documents will give rise to the recovery of monetary losses and damages including attorney fees and costs for which the unauthorized user will be held liable.
Project documents describe the design intent of the work and are not a representation of as-built or existing conditions. LPA is not responsible for any discrepancies between the project documents and the existing conditions.

© LPA, Inc.

ALTADENA ELEMENTARY SCHOOL

743 E. CALAVERAS ST,
ALTADENA CA 91001

Developed for
PASADENA UNIFIED SCHOOL DISTRICT

Revision	Date

Submittal	Date
100% SCHEMATIC DESIGN	12/08/2025
DSA SUBMITTAL V2	03/13/2026

Job Number	33366
Checked By	DW
Scale	12" = 1'-0"

GENERAL NOTES

S0.01

ABBREVIATIONS

&	AND
@	AT
Ø	DIAMETER
>	GREATER THAN
≥	GREATER THAN OR EQUAL TO
<	LESS THAN
≤	LESS THAN OR EQUAL TO
#	"POUNDS, NUMBER"
AB	ANCHOR BOLT(S)
ABV	ABOVE
ADDL	ADDITIONAL
ADJ	ADJACENT
AESS	ARCHITECTURAL EXPOSED STRUCTURAL STEEL
AFF	ABOVE FINISHED FLOOR
AHJ	AUTHORITY HAVING JURISDICTION
AHU	AIR HANDLING UNIT
ALT	ALTERNATE
ALUM	ALUMINUM
AOR	ARCHITECT OF RECORD
APPROX	APPROXIMATE
ARCH	ARCHITECT(URAL)
ASD	ALLOWABLE STRESS DESIGN
(B)	BOTTOM
BF	BRACED FRAME
BFF	BELOW FINISHED FLOOR
BLDG	BUILDING
BLKG	BLOCKING
BLW	BELOW
BM	BEAM
BN	BOUNDARY NAILING
BO	BOTTOM OF
BOD	BOTTOM OF DECK
BOF	BOTTOM OF FOOTING
BOPC	BOTTOM OF PILE CAP
BOS	BOTTOM OF STEEL
BOSL	BOTTOM OF SLAB
BOT	BOTTOM
BP	BASE PLATE
BRB	BUCKLING RESTRAINED BRACE
BRCG	BRACING
BRDG	BRIDGING
BRG	BEARING
BTWN	BETWEEN
BU	BUILT-UP
C	CAMBER
CA	COLUMN ABOVE
CANT	CANTILEVER
CB	COLUMN BELOW
CGS	CENTER OF GRAVITY OF PRESTRESSING STRAND
CIP	CAST-IN-PLACE
CIV	CIVIL
CJ	CONSTRUCTION/CONTROL JOINT
CJP	COMPLETE JOINT PENETRATION
CL	CENTERLINE
CLG	CEILING
CLR	CLEAR
CLT	CROSS LAMINATED TIMBER
CMU	CONCRETE MASONRY UNIT
COL	COLUMN
CONC	CONCRETE
CONN	CONNECTION/CONNECT
CONST	CONSTRUCTION
CONT	CONTINUOUS
COORD	COORDINATE
COV	COVER
CTR	CENTER
CVN	Charpy V-Notch
d	Penny - Nail size
db	"REBAR, WIRE, or PRESTRESSSING STRAND DIAMETER"
DBA	DEFORMED BAR ANCHOR
DBL	DOUBLE
DCW	DEMAND CRITICAL WELD
DEMO	DEMOLITION/DEMOLISH
DET	DETAIL
DF	Douglas Fir
DIA	DIAMETER
DIAG	DIAGONAL
DIM	DIMENSION
DN	Down
DO	DITTO
DWG	DRAWING
DWL	DOWEL
(E)	EXISTING
EA	EACH
EBF	ECCENTRICALLY BRACED FRAME
EDP	ENVIRONMENTAL PRODUCT DECLARATION
EF	EACH FACE
EFF	EFFECTIVE
EGRS	Elevator Guide Rail Support
EJ	EXPANSION JOINT
EL	ELEVATION
ELEC	ELECTRICAL
ELEV	ELEVATOR
EMBED	"EMBEDMENT, EMBEDDED"
EN	EDGE NAILING
ENGR	ENGINEER
EOR	ENGINEER OF RECORD
EQ	EQUAL
EQUIP	EQUIPMENT
EQUIV	EQUIVALENT
ER	EVALUATION REPORT
ESR	EVALUATION SERVICE REPORT
ETC	ET CETERA
EW	EACH WAY
EXP	EXPANSION
EXT	EXTERIOR
FAB	FABRICATE
fc	28-DAY (UNO) COMPRESSIVE STRENGTH OF CONCRETE
FDN	FOUNDATION
FF	Finished Floor
FG	FINISHED GRADE
FIN	FINISH(ED)
FLR	FLOOR
fm	28-DAY (UNO) COMPRESSIVE STRENGTH OF MASONRY
FN	FIELD NAILING
FRP	FIBER-REINFORCED POLYMER
FS	FAR SIDE / FINISHED SURFACE
FT	"FOOT, FEET"
FTG	FOOTING
FUT	FUTURE
Fy	YIELD STRENGTH
GA	"GAGE, GAUGE"
GALV	GALVANIZE(D)
GC	GENERAL CONTRACTOR
GEN	GENERAL
GWP	GLOBAL WARMING POTENTIAL
GLB	GLUED-LAMINATED BEAM
GR	GRADE
HD	HOLDDOWN
HDR	HEADER
HGR	HANGER
HORIZ	HORIZONTAL
HS	HIGH STRENGTH
HSA	HEADED STUD ANCHOR
HSB	HIGH STRENGTH BOLT
HSS	HOLLOW STRUCTURAL SECTION
HT	HEIGHT
IAPMO	INTERNATIONAL ASSOCIATION OF PLUMBING AND MECHANICAL OFFICIALS
ICC	INTERNATIONAL CODE COUNCIL
ID	INSIDE DIAMETER
IN	INCH
INFO	INFORMATION
INT	INTERIOR
IOR	INSPECTOR OF RECORD
JST	JOIST
JT	JOINT
K	KIPS (1000 LBS)
KLF	KIPS PER LINEAR FOOT
KSF	KIPS PER SQUARE FOOT
KSI	KIPS PER SQUARE INCH
L	ANGLE
LAND	LANDSCAPE
LBS	POUNDS
LCA	LIFE CYCLE ASSESSMENT
Ld	DEVELOPMENT LENGTH of straight rebar
Ldh	DEVELOPMENT LENGTH for hooked rebar
Ldt	DEVELOPMENT LENGTH for headed rebar
LL	DOUBLE ANGLE
LLBB	LONG LEG BACK TO BACK
LLH	LONG LEG HORIZONTAL
LLV	LONG LEG VERTICAL
LONG	LONGITUDINAL
LOR	LAB OF RECORD
LRFD	LOAD AND RESISTANCE FACTOR DESIGN
Ls	SPLICE LENGTH of straight rebars
LSH	LONG SIDE HORIZONTAL
LSL	LONG-SLOTTED HOLE
LSV	LONG SIDE VERTICAL
LT GA	LIGHT GAUGE
LVL	LAMINATED VENEER LUMBER
LWC	LIGHTWEIGHT CONCRETE
MAX	MAXIMUM
MECH	MECHANICAL
MEP	"MECH, ELECT, & PLUMB"
MEZZ	MEZZANINE
MF	MOMENT FRAME
MFR	MANUFACTURER
MIN	MINIMUM
MISC	MISCELLANEOUS
MTL	METAL
(N)	NEW
NF	NEAR FACE
NIC	NOT IN CONTRACT
NO.	NUMBER
NOM	NOMINAL
NS	NEAR SIDE
NTS	NOT TO SCALE
NWC	NORMALWEIGHT CONCRETE
O/C	ON CENTER
OD	OUTSIDE DIAMETER
OH	OPPOSITE HAND
OPNG	OPENING
OPP	OPPOSITE
OVS	OVERSIZED HOLE
PAF	POWDER/POWER ACTUATED FASTENER
PAR	PARALLEL
PC	PRECAST CONCRETE
PCF	POUNDS PER CUBIC FOOT
PCY	POUNDS PER CUBIC YARD
PERF	PERFORATED
PERP	PERPENDICULAR
PI	PROJECT INSPECTOR
PJ	PANEL JOINT
PJP	PARTIAL JOINT PENETRATION
PL	PLATE
PLF	POUNDS PER LINEAR FOOT
PLF	POUNDS PER LINEAR FOOT
PLUMB	PLUMBING
PQR	PROCEDURE QUALIFICATION RECORD
PRELIM	PRELIMINARY
PROP	PROPERTY
PSF	POUNDS PER SQUARE FOOT
PSI	POUNDS PER SQUARE INCH
PSL	PARALLEL STRAND LUMBER
PT	PRESSURE TREATED OR POST-TENSION(ED)
PWD	PLYWOOD
QTY	QUANTITY
RAD	RADIUS
RBS	REDUCED BEAM SECTION
REF	REFERENCE
REINF	REINFORCEMENT
REQ'D	REQUIRED
REV	REVISION
RO	ROUGH OPENING
RR	ROOF RAFTER
RTU	ROOF TOP UNIT
SC	SLIP CRITICAL OR SAW CUT
SCBF	SPECIAL CONCENTRICALLY BRACED FRAME
SCHED	SCHEDULE(D)
SDS	SELF-DRILLING SCREW
SECT	SECTION
SECR	STRUCTURAL ENGINEER OF RECORD
SEP	SEPARATION
SFRS	SEISMIC FORCE RESISTING SYSTEM
SHT	SHEET
SHTG	SHEATHING
SIM	SIMILAR
SLBB	SHORT LEG BACK TO BACK
SMRF	SPECIAL MOMENT RESISTING FRAME
SMS	SHEET METAL SCREW
SOG	SLAB-ON-GRADE
SPEC(S)	SPECIFICATION(S)
SQ	SQUARE
SS	STAINLESS STEEL
SSL	SHORT-SLOTTED HOLE
STAGG	STAGGERED
STD	STANDARD
STIFF	STIFFENER
STL	STEEL
STRUCT	"STRUCTURE, STRUCTURAL"
SUSP	SUSPENDED
SW	SHEAR WALL
SYM	"SYMMETRIC, SYMMETRICAL"
(T)	TOP
(T&B)	TOP AND BOTTOM
T.O.	TOP OF
THK	THICK
TOC	TOP OF CONCRETE
TOF	TOP OF FOOTING / FOUNDATION
TOM	TOP OF MASONRY
TOPC	TOP OF PILE CAP
TOS	TOP OF STEEL
TOSL	TOP OF SLAB
TOW	TOP OF WALL
TRANS	TRANSVERSE
TYP	TYPICAL
UNO	UNLESS NOTED OTHERWISE
UT	ULTRASONIC TESTING
VERT	VERTICAL
VIF	VERIFY IN FIELD
W/	WITH
W/C	WATER-CEMENT RATIO
W/O	WITHOUT
"WF, W"	WIDE FLANGE
WP	WORK POINT
WPS	WELD PROCEDURE SPECIFICATIONS
WT	"WEIGHT" OR "T" SECTION CUT FROM WIDE FLANGED BEAM"
WWF	WELDED WIRE FABRIC
XS	EXTRA STRONG
XXS	DOUBLE EXTRA STRONG

PROPRIETARY ANCHORAGES and FASTENERS

1. Anchorages:
   1. Drill and Epoxy Anchors:
      a. At Concrete: Hilti HIT-RE 500 V3 adhesive anchor system complying with ICC-ES Evaluation Report ESR-3814.
      b. At Masonry: Hilti HIT-HY 270 adhesive anchor system complying with ICC-ES Evaluation Report ESR-4143.
      c. Provide anchor type, size and embedment as indicated in details.
      d. Overhead applications must be installed using the Hilti HIT-SZ piston plug system.
   2. Mechanical (Expansion) Anchors:
      a. At Concrete: Hilti KB-TZ2 carbon steel expansion anchor complying with ICC-ES Evaluation Report ESR-4266.
      b. At Masonry: Hilti KB-TZ2 carbon steel expansion anchor complying with ICC-ES Evaluation Report ESR-4561.
      c. Where mechanical anchor is exposed to weather, provide stainless steel anchor conforming to the Evaluation Report in lieu of carbon steel.
   3. Welded Shear Studs: Nelson S3L flux filled, headed stud anchors, 65,000 psi minimum ultimate tensile strength conforming to ASTM A29, automatically end welded in the field and complying with ICC-ES Evaluation Report ESR-2856.
   4. Welded Deformed Anchors: Nelson D2L, cold rolled, deformed steel reinforcing bars conforming to ASTM A1064 and complying with ICC-ES Evaluation Report ESR-2907.

2. Fasteners:
   A. Power/Powder Actuated Fasteners (Indicated "Shot Pins" or "PAF" on Drawings): Hilti Low-velocity Power Actuated Drive, 0.157" diameter (X-U), complying with ICC-ES Report ESR-2269. Provide an appropriate washer between the fastener head and light gauge metal or wood surface. Shot pins shall not be used @ PT slab or beams.
   B. Self-Drilling Metal Screws (Indicated "Screws" or "SMS" on Drawings): Hilti Self-Drilling Screw complying with current ICC-ES Evaluation Report ESR-2196.
   C. Concrete Screws: Hilti KH-EZ carbon steel screw anchor complying with ICC ES Evaluation Report ESR-3027.
   D. Masonry Screws: Hilti KH-EZ carbon steel screw anchor complying with ICC ES Evaluation Report ESR-3056.
   E. Self-Drilling wood Screw: At steel-to-wood connections (Indicated "SDS" on drawings): Simpson SDS screw complying with ICC-ES ESR 2236. At wood-to-wood connections (Indicated "SDWS" on drawings): Simpson SDWS screw complying with IAPMO-UES ER 192.
   F. Lag Screw: Lag Screw complying with ANSI / ASME B18.2.1
   G. Where fasteners are exposed to weather, provide stainless steel fasteners conforming to the Evaluation Report in lieu of carbon steel.

3. Installation: Follow all manufacturer's written instructions and the referenced ICC-ES evaluation report. The contractor shall arrange for an anchor manufacturer's representative to provide onsite installation training for all anchor products specified.
   A. Prior to drilling holes for post-installed anchors, the contractor shall locate existing rebar, prestressing tendons, post-tensioning tendons, and embedded utilities using non-hazardous, non-destructive methods with accurate location tolerances (plus or minus 1/4-inch). Do not cut, hit, or otherwise damage existing rebar or tendons during anchor installation.
   B. Drilling Holes in Existing Concrete or Masonry for Anchorages: Use non-pneumatic, rotary hammer tools with ANSI-compliant non-rebar cutting drill bits to drill holes of proper tolerances. Locate existing rebar, including prestressing and post-tensioning tendons, using non-hazardous, destructive methods with accurate location tolerances (plus or minus 1/4-inch) prior to drilling holes to avoid cutting or damaging rebar. Holes shall be thoroughly cleaned per the manufacturer's written recommendations prior to the installation of anchorages.
   C. Deleterious Materials: Keep anchorages, including holes for drill and epoxy anchors and mechanical anchors, free of dust, grease, and other materials that impair bond.
   D. The use of a diamond core bit with a roughening tool for anchor holes requires approval from the Engineer of Record prior to drilling. Unless otherwise shown in the drawings, all holes shall be drilled perpendicular to the concrete surface.
   E. Embedment Depths:
      a. Mechanical Anchors: Embedment depths noted in drawings are the effective minimum embedment UNO. Refer to the applicable evaluation report for the corresponding minimum hole depth and nominal embedment.
      b. Screw Anchors: Embedment depths noted in drawings are the nominal minimum embedment UNO. Refer to the applicable evaluation report for the corresponding minimum hole depth.
   F. Anchor installer certification is required for all installers of drill and epoxy anchors in a horizontal or upwardly inclined orientation. Installer qualification must be provided to the inspector prior to installation.
   G. Installation Torques for Expansion Anchors shall be as noted:

Nominal Anchor Diameter	Expansion Anchor Installation Torque (ft-lb)			
	Into Concrete		Into Masonry	
	KB-TZ2 Carbon Steel	KB-TZ2 Stainless Steel	KB-TZ2 Carbon Steel	KB-TZ2 Stainless Steel
1/4"	4	6	4	6
3/8"	30	30	15	15
1/2"	50	40	25	15
5/8"	40	60	30	35
3/4"	110	125	50	50

   H. Installation Torques for Screw Anchors shall be as noted:

Nominal Anchor Diameter	Screw Anchor Installation Torque (ft-lb)					
	Into Concrete				Into Masonry	
	Hilti KH-EZ Hex	Hilti KH-EZ C	Hilti KH-EZ CRC	Hilti KH-EZ E & KH-EZ I	Hilti KH-EZ (Hex, P, PM, PL & C)	Hilti KH-EZ CRC
1/4"	18		N/A	18	21	N/A
3/8"	40 (19 @ h_{nom} <2.5")		40	40	22	20
1/2"	45	N/A	45	N/A	34	25
5/8"	85	N/A	85	N/A	38	35
3/4"	95	N/A	85	N/A	70	45

Note: 1/4" dia. Hilti KH-EZ P, PM & PL in concrete shall have installation torque of 18 ft-lb.

4. Testing:
   A. See DSA-103 Testing and Inspections.
   B. Installation in Concrete:
      a. Provide testing of post-installed anchors in concrete per CBC 2022 1910A.5.
   C. Installation in Masonry:
      a. Provide testing of post-installed anchors in masonry per CBC 2022 1910A.5 as required by section 1705A.4.

IDENTIFICATION STAMP
DIV. OF THE STATE ARCHITECT
APP: 03-125900 INC:
REVIEWED FOR
SS ☑ FLS ☑ ACS ☑
DATE: 03/18/2026

LPA
ARCHITECTURE ENGINEERING INTERIOR DESIGN
LANDSCAPE ARCHITECTURE PLANNING
949-261-1001 Office
LPADesignStudios.com
5301 California Avenue, Suite 100
Irvine, California 92617

REGISTERED PROFESSIONAL ENGINEER
DANIEL S. MANN
No. S4453
Exp. 12/31/26
STRUCTURAL
STATE OF CALIFORNIA

This document and all other project documents, ideas, aesthetics and designs incorporated therein are instruments of service. All project documents are copyright protected, are the property of LPA, Inc. (LPA) and cannot be lawfully used in whole or in part for any project or purpose except as set forth in the contractual agreement between LPA and its Client. The unauthorized disclosure and/or use of the project documents (including the creation of derivative works), may give rise to liability for copyright infringement, unlawful disclosure, use or misappropriation of property rights held by LPA. The unauthorized use of the project documents will give rise to the recovery of monetary losses and damages including attorney fees and costs for which the unauthorized user will be held liable.
Project documents describe the design intent of the work and are not a representation of as-built or existing conditions. LPA is not responsible for any discrepancies between the project documents and the existing conditions.

© LPA, Inc.

ALTADENA ELEMENTARY SCHOOL

743 E. CALAVERAS ST,
ALTADENA CA 91001

Developed for
PASADENA UNIFIED SCHOOL DISTRICT

Revision	Date

Submittal	Date
100% SCHEMATIC DESIGN	12/08/2025
DSA SUBMITTAL V2	03/13/2026

Job Number	33366
Checked By	DW
Scale	12" = 1'-0"

GENERAL NOTES

S0.02

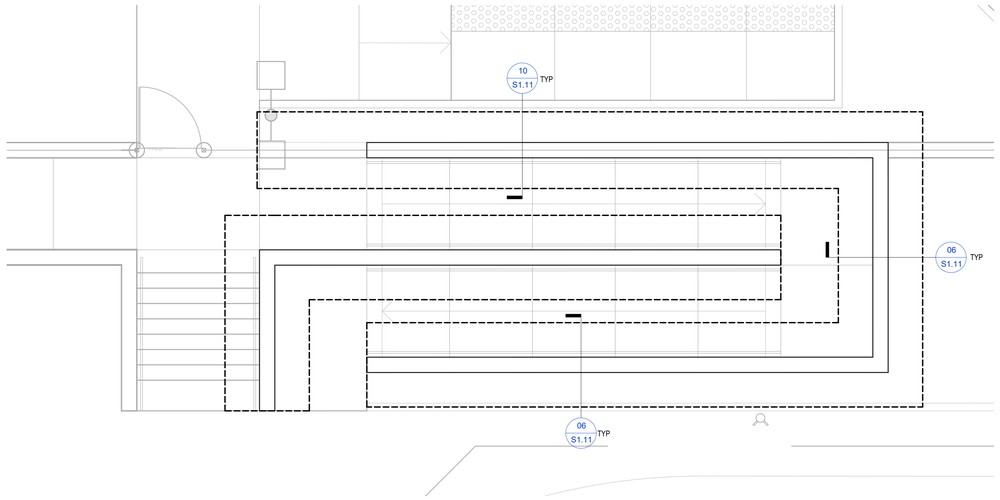

FOUNDATION PLAN 1/4" = 1'-0" 01

IDENTIFICATION STAMP
DIV. OF THE STATE ARCHITECT
APP: 03-125900 INC:
REVIEWED FOR
SS ☑ FLS ☑ ACS ☑
DATE: 03/18/2026

LPA

ARCHITECTURE ENGINEERING INTERIOR DESIGN
LANDSCAPE ARCHITECTURE PLANNING

949-261-1001 Office

LPADesignStudios.com

5301 California Avenue, Suite 100
Irvine, California 92617

REGISTERED PROFESSIONAL ENGINEER
DANIEL S. MANN
No. S4453
Exp. 12/31/26
STRUCTURAL
STATE OF CALIFORNIA

This document and all other project documents, ideas, aesthetics and designs incorporated therein are instruments of service. All project documents are copyright protected, are the property of LPA, Inc. (LPA) and cannot be lawfully used in whole or in part for any project or purpose except as set forth in the contractual agreement between LPA and its Client. The unauthorized disclosure and/or use of the project documents (including the creation of derivative works), may give rise to liability for copyright infringement, unlawful disclosure, use or misappropriation of property rights held by LPA. The unauthorized use of the project documents will give rise to the recovery of monetary losses and damages including attorney fees and costs for which the unauthorized user will be held liable.
Project documents describe the design intent of the work and are not a representation of as-built or existing conditions. LPA is not responsible for any discrepancies between the project documents and the existing conditions.

© LPA, Inc.

ALTADENA ELEMENTARY SCHOOL

743 E. CALAVERAS ST,
ALTADENA CA 91001

Developed for
PASADENA UNIFIED SCHOOL DISTRICT

Revision	Date

Submittal	Date
100% SCHEMATIC DESIGN	12/08/2025
DSA SUBMITTAL V2	03/13/2026

Job Number	33366
Checked By	DW
Scale	1/4" = 1'-0"

FOUNDATION PLAN

S1.01

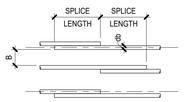

DIAGRAM AT STAGGERED SPLICES

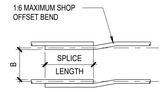

DIAGRAM AT NON-STAGGERED SPLICES

NOTES:
1. ALL SPLICES SHALL BE CLASS B SPLICES UNLESS INDICATED OTHERWISE. DEVELOPMENT Ld TO BE USED WHERE SPECIFICALLY INDICATED.
2. SCHEDULE APPLIES TO UNCOATED GRADE 60 BARS IN NORMAL WEIGHT CONC
3. TOP BARS (INDICATED "T" IN SCHEDULE) ARE HORIZ BARS WITH MORE THAN 12" OF CONC CAST BELOW THE BARS.
4. BOTTOM BARS (INDICATED "B" IN SCHEDULE) ARE ALL VERT BARS AND HORIZ BARS WITH LESS THAN 12" OF CONC CAST BELOW HORIZ BARS.
5. FOR LIGHTWEIGHT CONC MULTIPLY LENGTHS IN SCHEDULE BY 1.33.
6. AT SPLICE BETWEEN BARS OF VARYING SIZE, PROVIDE LAP SPLICE CORRESPONDING TO LARGER OF 'Ls' OF SMALLER BAR and 'Ld' OF LARGER BAR.
7. LENGTHS SHOWN IN SCHEDULE APPLY TO UNCOATED GRADE 60 BARS MULTIPLY THE SPECIFIED LENGTH BY 1.33 FOR GRADE 80 BARS.

TENSION LAP SPLICE "Ls" SCHEDULE

CATEGORY	NORMAL WEIGHT CONCRETE f'c PSI	SPLICE LENGTH (INCHES)																	
		0.375		0.500		0.625		0.750		0.875		1.000		1.128		1.270		1.410	
		#3		#4		#5		#6		#7		#8		#9		#10		#11	
		T	B	T	B	T	B	T	B	T	B	T	B	T	B	T	B	T	B
I	3000	28	22	37	29	47	36	56	43	81	63	93	72	105	81	118	91	131	101
	4000	24	19	32	25	40	31	48	37	70	54	80	62	91	70	102	79	113	87
	5000	22	17	29	22	36	28	43	33	63	49	72	55	81	63	91	70	101	78
II	3000	42	32	56	43	70	54	84	64	122	94	139	107	157	121	177	136	196	151
	4000	36	28	48	37	60	47	72	56	106	81	121	93	136	105	153	118	170	131
	5000	33	25	43	33	54	42	65	50	94	73	108	83	122	94	137	105	152	117

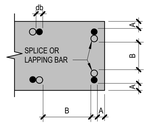

BAR SPACING DIAGRAM

LEGEND:

A. CLEAR EDGE DISTANCE
B. CLEAR SPACING OF SPLICED OR LAPPED BARS (SEE GEN NOTE 'E.8' FOR MIN CLEAR SPACING)
db = BAR ø

SCHEDULE FOR DETERMINING CATEGORY

I	II
1. A>db and B>2db 2. A>db and B>db and TIES THROUGHOUT Ld	OTHER CASES

DEVELOPMENT "Ld" SCHEDULE

CATEGORY	NORMAL WEIGHT CONCRETE f'c PSI	DEVELOPMENT LENGTH (INCHES)																	
		0.375		0.500		0.625		0.750		0.875		1.000		1.128		1.270		1.410	
		#3		#4		#5		#6		#7		#8		#9		#10		#11	
		T	B	T	B	T	B	T	B	T	B	T	B	T	B	T	B	T	B
I	3000	22	17	29	22	36	28	43	33	63	48	72	55	81	62	91	70	101	78
	4000	19	15	25	19	31	24	37	29	54	42	62	48	70	54	79	61	87	67
	5000	17	13	22	17	28	22	33	26	49	37	55	43	63	48	70	54	78	60
II	3000	32	25	43	33	54	41	64	50	94	72	107	82	121	93	136	105	151	116
	4000	28	22	37	29	47	36	56	43	81	63	93	71	105	81	118	91	131	101
	5000	25	19	33	26	42	32	50	38	73	56	83	64	94	72	105	81	117	90

TYPICAL REBAR TENSION SPLICE and BAR DEVELOPMENT SCHEDULE (IN CONCRETE) N.T.S. 04

RETAINING WALL SCHED

MAX "H1"	FTG WIDTH "W"	STEM REINF EACH FACE
3'-11"	5'-0"	#6 @ 12" O/C

RETAINING WALL SCHED

MAX "H1"	FTG WIDTH "W"	PARAPET "P"	STEM REINF EACH FACE
2'-0"	4'-6"	3'-0"	#6 @ 12" O/C
5'-0"	5'-6"	0'-6"	#6 @ 12" O/C

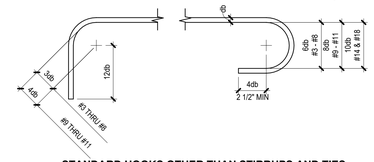

STANDARD HOOKS OTHER THAN STIRRUPS AND TIES

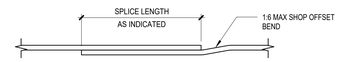

MAXIMUM OFFSET AT SPLICES

BAR DIAMETER DISTANCES

BAR DIA	BAR SIZE								
	#3	#4	#5	#6	#7	#8	#9	#10	#11
3db	1 1/8"	1 1/2"	1 7/8"	2 1/4"	2 5/8"	3"	-	-	-
4db	1 1/2"*	2"*	2 1/2"	3"	3 1/2"	4"	4 1/2"	5"	5 1/2"
6db	2 1/4"*	3"	3 3/4"	4 1/2"	5 1/4"	6"	-	-	-
8db	-	-	-	-	-	-	9"	10"	11"
12db	4 1/2"	6"	7 1/2"	9"	10 1/2"	12"	13 1/2"	15"	16 1/2"

* INDICATES MINIMUM DIMENSIONS MAY GOVERN

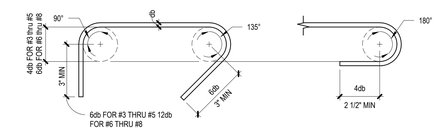

STANDARD HOOKS FOR STIRRUPS AND TIES

NOTE:
HOOKS OF TWO SUCCESSIVE STIRRUPS OR TIES ENGAGING SAME LONGITUDINAL BAR SHALL BE ALTERNATED END FOR END

TYP REINFORCING STEEL HOOKS, BENDS and OFFSETS AT SPLICES N.T.S. 03

PLAN VIEW A-A

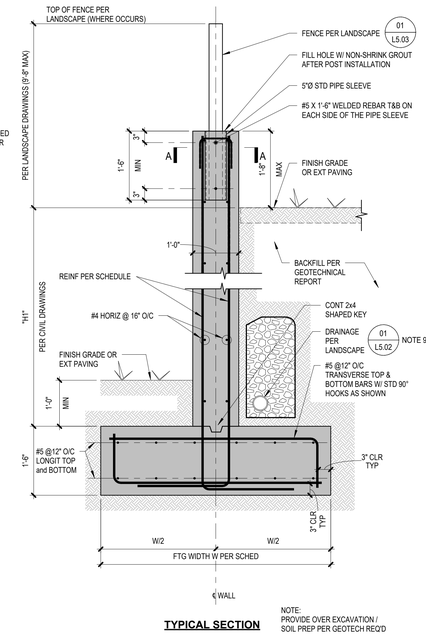

TYPICAL SECTION

NOTE:
PROVIDE OVER EXCAVATION / SOIL PREP PER GEOTECH REQ'D

TYP CONC RETAINING WALL & SCHEDULE N.T.S. 10

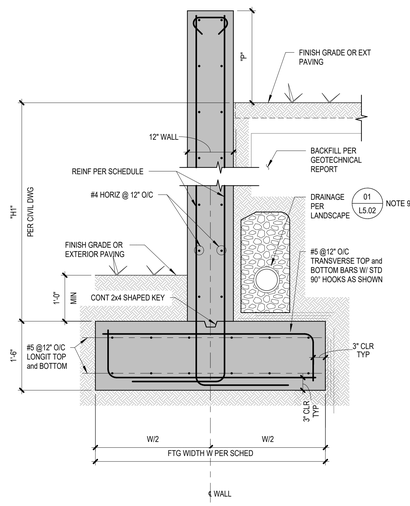

TYPICAL SECTION

TYP CONC RETAINING WALL & SCHED N.T.S. 06

NOTES:
1. DO NOT PLACE SLEEVES OR CONDUIT IN ISOLATED SPREAD FOOTINGS - RUN AROUND OR BELOW THESE FTG.
2. SLEEVES ARE NOT TO PASS THROUGH CONT FTG OR GRADE BEAMS UNLESS SHOWN OTHERWISE - WHERE SLEEVES ARE PERMITTED, LOCATE WITHIN MIDDLE THIRD OF FTG OR GRADE BEAM DEPTH.

TRENCH ADJACENT TO FOUNDATION

HEIGHT	CAISSON DEPTH	DIA
22'-6" MAX	5'-0"	24"

NOTE:
CONCRETE f'c = 2500 AT 28 DAYS

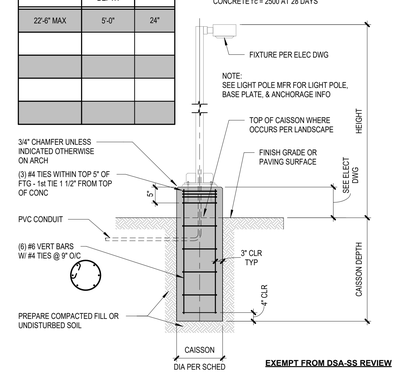

EXEMPT FROM DSA-SS REVIEW

TYP SITE LIGHT POLE DETAIL N.T.S. 05

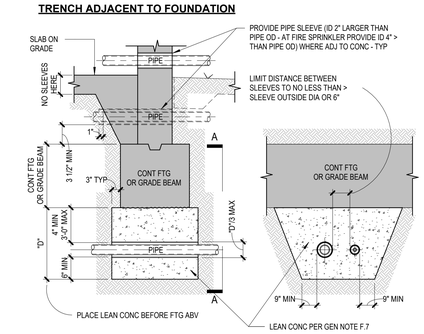

PIPES THRU OR BELOW FOUNDATION **ELEVATION A-A**

TYP PIPES THRU OR TRENCHES ADJACENT TO FOUNDATIONS N.T.S. 01

IDENTIFICATION STAMP
DIV. OF THE STATE ARCHITECT
APP: 03-125900 INC:
REVIEWED FOR
SS ☑ FLS ☑ ACS ☑
DATE: 03/18/2026

LPA

ARCHITECTURE ENGINEERING INTERIOR DESIGN LANDSCAPE ARCHITECTURE PLANNING

949-261-1001 Office

LPADesignStudios.com

5301 California Avenue, Suite 100
Irvine, California 92617

REGISTERED PROFESSIONAL ENGINEER
DANIEL S. MANN
No. S4453
Exp. 12/31/26
STRUCTURAL
STATE OF CALIFORNIA

This document and all other project documents, ideas, aesthetics and designs incorporated therein are instruments of service. All project documents are copyright protected, are the property of LPA, Inc. (LPA) and cannot be lawfully used in whole or in part for any project or purpose except as set forth in the contractual agreement between LPA and its Client. The unauthorized disclosure and/or use of the project documents (including the creation of derivative works), may give rise to liability for copyright infringement, unlawful disclosure, use or misappropriation of property rights held by LPA. The unauthorized use of the project documents will give rise to the recovery of monetary losses and damages including attorney fees and costs for which the unauthorized user will be held liable.
Project documents describe the design intent of the work and are not a representation of as-built or existing conditions. LPA is not responsible for any discrepancies between the project documents and the existing conditions.

© LPA, Inc.

ALTADENA ELEMENTARY SCHOOL

743 E. CALAVERAS ST.,
ALTADENA CA 91001

Developed for
PASADENA UNIFIED SCHOOL DISTRICT

Revision	Date

Submittal	Date
100% SCHEMATIC DESIGN	12/08/2025
DSA SUBMITTAL V2	03/13/2026

Job Number	33366
Checked By	DW
Scale	As indicated

SITE DETAILS

S1.11

VIEW KEY

NAME — LEVEL NAME
10'-0" — HEIGHT ABOVE PROJECT 0'-0"

1 — KEYNOTE: INDICATES NOTE USED TO DESCRIBE ADDITIONAL INFORMATION ABOUT WORK REQUIRED, SPECIFIC TO THE SHEET AND/OR DETAIL

LINE TYPE AND TAG KEY:

NEW WORK BY THIS CONTRACTOR (WIDE LINE)
— NEW
- - - - - - - - EXISTING TO BE REMOVED (SHORT DASHED PATTERN)
— — — NEW UNDERFLOOR OR UNDERGROUND (LONG DASHED PATTERN)

EXISTING TO REMAIN OR WORK BY OTHERS (NARROW LINE)
——————— EXISTING
- - - - - - - - - - EXISTING TO BE REMOVED BY OTHERS (SHORT DASHED PATTERN)
— — — EXISTING UNDERFLOOR OR UNDERGROUND (LONG DASHED PATTERN)

HALFTONING DOES NOT MODIFY SCOPE.

'TAG'-E — TAGS WITH DASH 'E' INDICATES THE REFERENCED OBJECT IS EXISTING

TAG-1 — UNDERLINED TAG INDICATES OBJECT IS IN-SCOPE. IF NEW, ADDITIONAL INFORMATION IS AVAILABLE IN A SCHEDULE, MATERIAL LIST, OR SYMBOL LIST

INDICATES AN EXISTING SYSTEM'S POINT OF CONNECTION/REMOVAL

FIRE / SMOKE BARRIER DESIGNATIONS

FIRE AND SMOKE SEPARATIONS ARE NOT SHOWN ON THESE DOCUMENTS. CONTRACTOR SHALL REVIEW THE ARCHITECTURAL PLANS AND DETERMINE THE LOCATIONS OF ALL FIRE AND SMOKE PARTITIONS, BARRIERS, AND WALLS. THIS INCLUDES FLOOR RATINGS. PRICING SHALL INCLUDE ALL MATERIALS AND LABOR REQUIRED TO MAINTAIN THE RATINGS OF ALL RATED SEPARATIONS, WHETHER SHOWN ON THE ENGINEERING PLANS OR NOT.

APPLICABLE CODES

CONTRACTOR SHALL COMPLY WITH APPLICABLE CODES AND LOCAL AMENDMENTS INCLUDING, BUT NOT LIMITED TO, THE FOLLOWING:

BUILDING CODE:	CBC 2025 EDITION
FIRE CODE:	IFC 2025 EDITION
PLUMBING CODE:	CPC 2025 EDITION
MECHANICAL CODE:	CMC 2025 EDITION
ELECTRICAL CODE:	NFPA 70 (NEC) 2025 EDITION
LIFE SAFETY CODE:	NFPA 101 2022 EDITION
ENERGY CONSERVATION CODE:	IECC 2022 EDITION
HEALTH DEPARTMENT CODE:	CURRENT EDITION
LOCAL BUILDING CODE:	CURRENT EDITION

ELECTRICAL EQUIPMENT TAGS

TAG:	DESCRIPTION:	RELATED SPECIFICATION
EVCS-#	ELECTRICAL VEHICLE CHARGING STATION	26 27 29
SB-#	SWITCHBOARD	26 24 13

ELECTRICAL ABBREVIATION KEY

ABBR:	DESCRIPTION:
ABV	ABOVE
AFC	ABOVE FINISHED CEILING
AFF	ABOVE FINISHED FLOOR
AFG	ABOVE FINISHED GRADE
ASR	ARCHITECTURAL SURFACE RACEWAY
BC	BELOW COUNTER
C	CONDUIT (BRANCH CIRCUIT OR FEEDER CONTEXT)
CO	CONDUIT AND BOX ROUGH-IN ONLY (ROUGH-IN ONLY)
EG	EQUIPMENT GROUND
EGC	EQUIPMENT GROUNDING CONDUCTOR
EOL	END OF LINE
EPO	EMERGENCY POWER OFF
GFR	GROUND FAULT REMOTE
HOA	HAND/OFF/AUTO
ITR	IT RACK MOUNTED RECEPTACLE
NC	NORMALLY CLOSED
NEMA #	NEMA RATING
NIC	NOT IN CONTRACTED SCOPE
NO	NORMALLY OPEN
ROOF	EQUIPMENT LOCATED ON ROOF ABOVE
SM	SURFACE MOUNTED
TYP	TYPICAL
UG	UNDERGROUND
UON	UNLESS OTHERWISE NOTED

CALIFORNIA DSA MECHANICAL, ELECTRICAL, AND PLUMBING COMPONENT ANCHORAGE NOTES:

1. EQUIPMENT ANCHORAGE NOTE:
   ALL MECHANICAL, PLUMBING, AND ELECTRICAL COMPONENTS SHALL BE ANCHORED AND INSTALLED PER THE DETAILS ON THE DSA APPROVED CONSTRUCTION DOCUMENTS. THE FOLLOWING COMPONENTS SHALL BE ANCHORED OR BRACED TO MEET THE FORCE AND DISPLACEMENT REQUIREMENTS PRESCRIBED IN THE 2019 CBC, SECTION 1617A.1 8 THROUGH 1617A.1.26 AND ASCE 7-16 CHAPTERS 13,26, AND 30.

   1. ALL PERMANENT EQUIPMENT AND COMPONENTS.
   2. TEMPORARY, MOVABLE OR MOBILE EQUIPMENT THAT IS PERMANENTLY ATTACHED (E.G. HARD WIRED) TO THE BUILDING UTILITY SERVICES SUCH AS ELCTRICITY, GAS OR WATER. "PERMANENTLY ATTACHED" SHALL INCLUDE ALL ELECTRICAL CONNECTION EXCEPT PLUGS FOR 110/220 VOLT RECEPTACLES HAVING A FLEXIBLE CABLE.
   3. TEMPORARY, MOVABLE OR MOBILE EQUIPMENT WHICH IS HEAVIER THAN 400 POUNDS OR HAS A CENTER MASS LOCATED 4 FEET OR MORE ABOVE THE ADJACENT FLOOR OR ROOF LEVEL THAT DIRECTLY SUPPORT THE COMPONENT IS REQUIRED TO BE RESTRAINED IN A MANNER APPROVED BY DSA.

   THE FOLLOWING MECHANICAL AND ELECTRICAL COMPONENTS SHALL BE POSITIVELY ATTACHED TO THE STRUCTURE BUT NEED NOT DEMONSTRATE DESIGN COMPLIANCE WITH THE REFERENCES NOTED ABOVE. THESE COMPONENTS SHALL HAVE FLEXIBLE CONNECTIONS PROVIDED BETWEEN THE COMPONENT AND ASSOCIATED DUCTWORK, PIPING, AND CONDUIT. FLEXIBLE CONNECTIONS MUST ALLOW MOVEMENT IN BOTH TRANSVERSE AND LONGITUDINAL DIRECTIONS.

   A. COMPONENTS WEIGHING LESS THAN 400 POUNDS AND HAVE A CENTER OF MASS LOCATED 4 FEET OR LESS ABOVE THE ADJACENT FLOOR OR ROOF LEVEL THAT DIRECTLY SUPPORT THE COMPONENT.
   B. COMPONENTS WEIGHING LESS THAN 20 POUNDS, OR IN THE CASE OF DISTRIBUTED SYSTEMS, LESS THAN 5 POUNDS PER FOOT, WHICH ARE SUSPENDED FROM A ROOF OR FLOOR OR HUNG FROM A WALL.

   THE ANCHORAGE OF ALL MECHANICAL, ELECTRICAL, AND PLUMBING COMPONENTS SHALL BE SUBJECT TO THE APPROVAL OF THE STRUCTURAL ENGINEER OF RECORD AND ACCEPTANCE BY DSA. THE PROJECT INSPECTOR WILL VERIFY THAT ALL COMPONENTS AND EQUIPMENT HAVE BEEN ANCHORED IN ACCORDANCE WITH THE ABOVE REQUIREMENTS.

2. PIPING, DUCTWORK, AND ELECTRICAL DISTRIBUTION SYSTEMS BRACING NOTE.

   PIPING, DUCTWORK, AND ELECTRICAL DISTRIBUTION SYSTEM SHALL BE BRACED TO COMPLY WITH THE FORCES AND DISPLACEMENTS PRESCRIBED IN ASCE 7-16 SECTION 13.3 AS DEFINED INS ASCE 7-16 SECTION 13.6.5, 13.6.6, 13.6.7, 13.6.8, AND 2019 CBC, SECTIONS 1617A.1.24, 1617A.1.25 AND 1617A.1.26.

   THE METHOD OF SHOWING BRACING AND ATTACHMENTS TO THE STRUCTURE FOR THE IDENTIFIED DISTRIBUTION SYSTEM ARE AS NOTED BELOW. WHEN BRACING AND ATTACHMENTS ARE BASED ON A PREAPPROVED INSTALLATION GUIDE (E.G. HCAI OPM FOR 2013 CBC OR LATER), COPIES OF THE BRACING SYSTEM INSTALLATION GUIDE OR MANUAL SHALL BE AVAILABLE ON THE JOBSITE PRIOR TO THE START OF AND DURING THE HANGING AND BRACING OF THE DISTRIBUTION SYSTEMS. THE STRUCTURAL ENGINEER OF RECORD SHALL VERIFY THE ADEQUACY OF THE STRUCTURE TO SUPPORT THE HANGER AND BRACE LOADS.

   MECHANICAL PIPING (MP), MECHANICAL DUCTS (MD), PLUMBING PIPING (PP)M ELECTRICAL DISTRIBUTION SYSTEMS (E):

   MP [] MD [] PP [] E (x) OPTION 1: DETAILED ON THE APPROVED DRAWINGS WITH PROJECT SPECIFIC NOTES AND DETAILS.

   MP [] MD [] PP [] OPTION 2: SHALL COMPLY WITH THE APPLICABLE HCAI PRE-APPROVAL (OPM#) #_____.

ELECTRICAL RENOVATION NOTES:

THESE NOTES APPLY TO ALL ELECTRICAL SHEETS AND TRADES, INCLUDING BUT NOT LIMITED TO, LIGHTING, POWER, FIRE ALARM, AND OTHER LOW VOLTAGE SYSTEMS.

1. EXISTING CONDITIONS ARE SHOWN BASED ON INFORMATION OBTAINED FROM FIELD SURVEYS, EXISTING BUILDING DOCUMENTS. CONTRACTOR SHALL REVIEW EXISTING CONDITIONS AND REPORT CONFLICTS.
2. NOT ALL EXISTING EQUIPMENT, LUMINAIRES, AND CONDUIT ARE SHOWN. CONTRACTOR SHALL REVIEW EXISTING CONDITIONS AND REPORT CONFLICTS.
3. CONTRACTOR SHALL REVIEW EXISTING CONDITIONS PRIOR TO FABRICATION OF CABLE TRAY, BUSWAY, CONDUIT RACKS, AND OTHER SYSTEMS. RISES AND DROPS MAY BE NECESSARY BECAUSE OF EXISTING FIELD CONDITIONS.
4. ELECTRICAL CONTRACTOR SHALL REVIEW EXISTING CONDITIONS TO VERIFY ACCESSIBILITY TO THE AREAS OF THEIR WORK INCLUDING WALLS, FLOOR, CEILINGS, CEILING TILES/GRID, AND ROOF. ELECTRICAL CONTRACTOR IS RESPONSIBLE TO PROVIDE CUTTING, REMOVAL, PATCHING, AND REINSTALLATION OF AFFECTED AREAS ASSOCIATED WITH THEIR WORK BY COORDINATING WITH THE GENERAL CONTRACTOR OR QUALIFIED CONTRACTOR. ,
5. WHERE EXISTING ELECTRICAL SYSTEMS ARE LOCATED IN AREAS THAT CONFLICT WITH NEW EQUIPMENT, PIPING, OR DUCTWORK TO BE INSTALLED, EACH CONTRACTOR SHALL EITHER ARRANGE NEW EQUIPMENT, CONDUIT, OR DUCTWORK IN SUCH A FASHION THAT IT DOES NOT CONFLICT WITH EXISTING SYSTEMS, OR REWORK EXISTING ELECTRICAL SYSTEMS TO ALLOW FOR INSTALLATION OF NEW EQUIPMENT, PIPING, OR DUCTWORK.

ELECTRICAL PHASING NOTES:

THESE NOTES APPLY TO ALL ELECTRICAL SHEETS AND TRADES, INCLUDING BUT NOT LIMITED TO, LIGHTING, POWER, FIRE ALARM, AND OTHER LOW VOLTAGE SYSTEMS.

1. REFER TO **ARCHITECTURAL** DRAWINGS FOR GENERAL DESCRIPTION OF PHASES.
2. REFER TO **ARCHITECT'S** INSTRUCTIONS FOR MORE DETAILS AND PHASING SCHEDULES AND FOR CONCURRENT WORK. MECHANICAL, ELECTRICAL AND TECHNOLOGY DRAWINGS DEPICT THE INTENT OF THE FINAL DESIGN. THE MECHANICAL, ELECTRICAL, AND TECHNOLOGY DRAWINGS DO NOT DEPICT THE MEANS AND METHODS TO MEET THE REQUIREMENTS OF THE PHASING CRITERIA.
3. REVIEW PROJECT PHASING PLANS TO COORDINATE DEMOLITION WORK, OUTAGES, ETC. WITH AFFECTED ADJACENT AREAS.
4. PROVIDE TEMPORARY LIGHTING, POWER, FIRE ALARM, AND OTHER LOW VOLTAGE SYSTEMS, ETC. AS NEEDED TO MAINTAIN SERVICE TO ALL AREAS DURING ALL PHASES OF PROJECT.

SCOPE OF WORK NOTES:

1. OUTDOOR LIGHTING SYSTEM WITH TIME CLOCK CONTROLS.
2. POWER CONNECTION TO SOLAR PV CANOPY.
3. POWER CONNECTION TO EV CHARGER IN PARKING LOT.
4. THE CALIFORNIA ENERGY CODE SECTION 10-103 REQUIRES ACCEPTANCE TESTING ON ALL NEWLY INSTALLED LIGHTING CONTROLS, MECHANICAL SYSTEMS, ENVELOPES, AND PROCESS EQUIPMENT AFTER INSTALLATION AND BEFORE PROJECT COMPLETION. AN ACCEPTANCE TEST IS A FUNCTIONAL PERFORMANCE TEST TO HELP ENSURE THAT NEWLY INSTALLED EQUIPMENT IS OPERATING AND IN COMPLIANCE WITH THE ENERGY CODE.
5. LIGHTING CONTROLS ACCEPTANCE TESTS MUST BE PERFORMED BY A CERTIFIED LIGHTING CONTROLS ACCEPTANCE TEST TECHNICIAN (ATT).
6. MECHANICAL SYSTEM ACCEPTANCE TESTS MUST BE PERFORMED BY A CERTIFIED MECHANICAL ATT FOR PROJECTS SUBMITTED ON OR AFTER OCTOBER 1, 2021.
7. ENVELOPE AND PROCESS EQUIPMENT ACCEPTANCE TESTS SHALL BE PERFORMED BY THE INSTALLING CONTRACTOR, ENGINEER/ARCHITECT OF RECORD OR THE OWNER'S AGENT.
8. A LISTING OF CERTIFIED ATT CAN BE FOUND AT: HTTPS://WWW.ENERGY.CA.GOV/PROGRAMS-AND-TOPICS/PROGRAMS/ACCEPTANCE-TEST-TECHNICIAN-CERTIFICATION-PROVIDER-PROGRAM/ACCEPTANCE.
9. THE ACCEPTANCE TESTING PROCEDURES MUST BE REPEATED, AND DEFICIENCIES MUST BE CORRECTED BY THE BUILDER OR INSTALLING CONTRACTOR UNTIL THE CONSTRUCTION/INSTALLATION OF THE SPECIFIED SYSTEMS CONFORM AND PASS THE REQUIRED ACCEPTANCE CRITERIA.
10. PROJECT INSPECTORS WILL COLLECT THE FORMS TO CONFIRM THAT THE REQUIRED ACCEPTANCE TESTS HAVE BEEN COMPLETED.

CALIFORNIA ENERGY CODE SECTION 10-103 REQUIRES ACCEPTANCE TESTING ON ALL NEWLY INSTALLED LIGHTING CONTROLS, MECHANICAL SYSTEMS, ENVELOPES, AND PROCESS EQUIPMENT AFTER INSTALLATION AND BEFORE PROJECT COMPLETION. AN ACCEPTANCE TEST IS A FUNCTIONAL PERFORMANCE TEST TO HELP ENSURE THAT NEWLY INSTALLED EQUIPMENT IS OPERATING AND IN COMPLIANCE WITH THE ENERGY CODE.

LIGHTING CONTROLS ACCEPTANCE TESTS MUST BE PERFORMED BY A CERTIFIED LIGHTING CONTROLS ACCEPTANCE TEST TECHNICIAN (ATT).

A LISTING OF CERTIFIED ATT CAN BE FOUND AT:
HTTPS://WWW.ENERGY.CA.GOV/PROGRAMS-AND-TOPICS/PROGRAMS/ACCEPTANCE-TEST-TECHNICIAN-CERTIFICATION-PROVIDER-PROGRAM/ACCEPTANCE.

THE ACCEPTANCE TESTING PROCEDURES MUST BE REPEATED, AND DEFICIENCIES MUST BE CORRECTED BY THE BUILDER OR INSTALLING CONTRACTOR UNTIL THE CONSTRUCTION/INSTALLATION OF THE SPECIFIED SYSTEMS CONFORM AND PASS THE REQUIRED ACCEPTANCE CRITERIA.

PROVIDE ACCEPTANCE TESTING FORMS TO THE PROJECT INSPECTOR TO VERIFY COMPLIANCE.

ELECTRICAL INSTALLATION NOTES:

1. **THE COMPLETE INSTALLATION SHALL BE IN ACCORDANCE WITH THE CALIFORNIA ACCESSIBILITY CODE REQUIREMENTS. REFER TO THE ARCHITECTURAL DRAWINGS ACCESSIBILITY STANDARDS.**
2. CIRCUIT NUMBERS ARE SHOWN FOR CIRCUIT IDENTIFICATION. CIRCUITING SHALL AGREE WITH NUMBERING ON THE PANEL PROVIDED. COMMON NEUTRALS MAY NOT BE USED FOR BRANCH CIRCUITS. BALANCE THE LOAD ON PANEL AS EVENLY AS POSSIBLE BETWEEN EACH PHASE.
3. BRANCH WIRING FOR FEEDERS AND BRANCH CIRCUITS SHALL BE ROUTED IN SEPARATE RACEWAY, JUNCTION BOXES, PULL BOXES, AND CABINETS. WIRING FOR EACH BRANCH SHALL BE INDEPENDENT FROM OTHER BRANCHES, INCLUDING THE NORMAL BRANCH.
4. FLUSH MOUNT ALL LIGHTING CONTROL DEVICES AT +42" FROM FLOOR (CENTERLINE DIMENSION), EXCEPT WHERE OTHERWISE NOTED.
5. FLUSH MOUNT ALL DUPLEX RECEPTACLES AND TECHNOLOGY OUTLETS AT +18" FROM FLOOR (CENTERLINE DIMENSION), EXCEPT WHERE OTHERWISE NOTED. RECEPTACLES AND OUTLETS MAY BE SURFACE MOUNTED WHEN CONDUIT IS SPECIFIED EXPOSED. MOUNT EXTERIOR LOCATED RECEPTACLES WITH WHILE-IN-USE COVERS AT +20" FROM FINISHED GRADE (CENTER DIMENSIONS) TO MAINTAIN INSTALLATION ADA COMPLIANCE.
6. ALL MATERIALS USED TO SEAL PENETRATIONS OF FIRE RATED WALLS AND FLOORS SHALL BE TESTED AND CERTIFIED AS A SYSTEM PER ASTM E814 STANDARDS FOR FIRE TESTS OF THROUGH-PENETRATION FIRESTOPS. REFER TO **DIVISION 7** FOR ADDITIONAL INFORMATION AND REQUIREMENTS SPECIFIC TO FIRESTOPPING.
7. CONNECTION FOR ELECTRIC WATER COOLERS (EWC) SHALL BE A JUNCTION BOX CONCEALED BEHIND WATER COOLER ACCESS PLATE OR BE A GFI RECEPTACLE LOCATED DIRECTLY BELOW AND CENTERED ON EWC. CONTRACTOR SHALL VERIFY TYPE OF EWC TO BE INSTALLED.
8. MOUNT ALL FIRE ALARM PULL STATIONS AT +42" FROM FLOOR (CENTERLINE DIMENSION) EXCEPT WHERE OTHERWISE NOTED.
9. INSTALL ALL WALL MOUNTED FIRE ALARM NOTIFICATION DEVICES AT 90" ABOVE FINISHED FLOOR OR 6" BELOW THE CEILING, WHICHEVER IS LOWER, EXCEPT WHERE OTHERWISE NOTED. HEIGHT SHALL BE MEASURED TO THE TOP OF THE DEVICE.
10. CONTRACTOR SHALL COORDINATE THE LOCATION OF ALL CEILING MOUNTED DEVICES AND EQUIPMENT WITH LUMINAIRES, SPRINKLER, AND CEILING DIFFUSERS. CENTER ALL DEVICES IN CEILING TILE PATTERN. SMOKE DETECTORS,CARBON MONOXIDE DETECTORS, AND OCCUPANCY/VACANCY SENSORS SHALL BE LOCATED NO CLOSER THAN 3 FEET TO AN AIR SUPPLY DIFFUSER OR RETURN GRILLE. CARBON MONOXIDE DETECTORS SHALL BE LOCATED 10 PLUS FT FROM FIRE PLACES, COOKING, AND SIMILAR FUEL-BURNING APPLIANCES.
11. CONTRACTOR SHALL VERIFY ALL FURNITURE, MODULAR FURNITURE, AND EQUIPMENT LOCATIONS WITH ARCHITECTURAL PLANS, ELEVATIONS, AND REVIEWED SHOP DRAWINGS. PRIOR TO MAKING THE ACTUAL ELECTRICAL INSTALLATION, THIS CONTRACTOR SHALL ADJUST RECEPTACLES, OUTLETS, OR CONNECTION LOCATIONS TO ACCOMMODATE FURNITURE AND/OR EQUIPMENT.
12. ELECTRICAL AND TECHNOLOGY EQUIPMENT SHALL BE MOUNTED TO AVOID IMPEDANCE OF, OPERATION OF, AND/OR ACCESS TO ELECTRICAL AND MECHANICAL EQUIPMENT. ALL MOUNTING OF ELECTRICAL AND TELECOMMUNICATIONS EQUIPMENT, ON EQUIPMENT SUPPLIED BY ANOTHER CONTRACTOR, SHALL BE APPROVED IN ADVANCE BY THE OTHER CONTRACTOR.
13. CONTRACTOR SHALL BE RESPONSIBLE FOR ALL OPENINGS REQUIRED IN WALLS. ALL OPENINGS SHALL BE REPAIRED TO MATCH EXISTING BY A QUALIFIED CONTRACTOR AT THE EXPENSE OF THIS CONTRACTOR. ALL CONDUITS THROUGH WALLS SHALL BE GROUTED OR SEALED INTO OPENINGS.
14. EACH CONTRACTOR IS RESPONSIBLE FOR DAMAGE CAUSED BY THEIR ACTIONS TO THE WALLS, FLOORS, CEILINGS, AND ROOFS. THE CONTRACTOR WHOSE WORK CAUSES DAMAGE IS RESPONSIBLE FOR PATCHING TO MATCH ORIGINAL CONSTRUCTION, FIRE RATING, AND FINISH.
15. REFER TO ARCHITECTURAL REFLECTED CEILING PLAN, ELECTRICAL, TECHNOLOGY AUDIO/VISUAL, AND OTHER ELECTRICAL PLANS FOR EXACT LOCATIONS OF ALL CEILING MOUNTED DEVICES, OTHER THAN SPRINKLERS.
16. ELECTRICAL IDENTIFICATION. REFER TO SPECIFICATION SECTION 26 05 53 FOR COLOR/LABEL REQUIREMENTS FOR CONDUIT, BOX, CABLE/WIRE, AND EQUIPMENT.

RECEPTACLE SUBSCRIPT KEY:

DEVICE # = MOUNTING (IF APPLICABLE)
1 = CIRCUIT NUMBER

*IF LABEL IS ORIENTED HORIZONTALLY A SLASH WILL SEPARATE THIS INFORMATION. EX: A / 1

ELECTRICAL MOUNTING SUBSCRIPT KEY:

A	MOUNT AT +6" TO CENTERLINE ABOVE COUNTER OR BACKSPLASH
C	MOUNT AT CEILING (DEVICE OR ROUGH-IN CONTEXT)
H	MOUNT ORIENTED HORIZONTALLY
L	MOUNT IN CASEWORK
M	MOUNT IN MODULAR FURNITURE
R	MOUNT IN SURFACE RACEWAY
SM	SURFACE MOUNTED
WG	WIRE GUARD
+#"	MOUNT AT #" TO CENTERLINE ABOVE FINISHED FLOOR

SHADED DEVICE INDICATES DEVICE IS CONNECTED TO AN EMERGENCY CIRCUIT.

DEVICE (E)

ELECTRICAL SHEET INDEX

E000	ELECTRICAL COVERSHEET
E001	OUTDOOR TITLE 24
E100	SITE PLAN - ELECTRICAL
E200	ELECTRICAL DETAILS
E201	ELECTRICAL DETAILS
E202	ELECTRICAL DETAILS
E300	ELECTRICAL DIAGRAMS & SCHEDULES
E301	PV SYSTEM DIAGRAMS
E400	ELECTRICAL SPECIFICATIONS
E401	ELECTRICAL SPECIFICATIONS
E402	ELECTRICAL SPECIFICATIONS
E403	ELECTRICAL SPECIFICATIONS
E404	ELECTRICAL SPECIFICATIONS
E405	ELECTRICAL SPECIFICATIONS
GRAND TOTAL: 14	

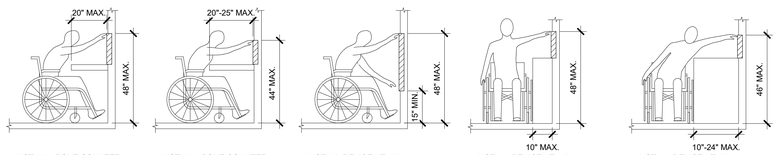

INSTALL ABOVE COUNTER DEVICE AT 44" ABOVE FINISHED FLOOR.

INSTALL ABOVE COUNTER DEVICE AT 40" ABOVE FINISHED FLOOR.

INSTALL DEVICE AT 18" ABOVE FINISHED FLOOR.

CBC STANDARDS - FRONT ACCESS

INSTALL DEVICE AT 44" ABOVE FINISHED FLOOR.

INSTALL DEVICE AT 42" ABOVE FINISHED FLOOR.

CBC STANDARDS - SIDE ACCESS

CBC STANDARDS FOR ACCESSIBLE DESIGN

LPA
ARCHITECTURE ENGINEERING INTERIOR DESIGN LANDSCAPE ARCHITECTURE PLANNING
949-261-1001 Office
LPADesignStudios.com
5301 California Avenue, Suite 100
Irvine, California 92617

REGISTERED PROFESSIONAL ENGINEER
NESTOR C. IGNACIO JR.
Lic. E16934
Exp. 6-30-2027
ELECTRICAL
STATE OF CALIFORNIA

IMEG
www.imegcorp.com
300 NORTH LAKE AVENUE
12TH FLOOR
PASADENA, CA 91101
P: 626.463.2800 F: 626.463.2801
PROJECT #25007252.00

This document and all other project documents, ideas, aesthetics and designs incorporated therein are instruments of service. All project documents are copyright protected, are the property of LPA, Inc. (LPA) and cannot be lawfully used in whole or in part for any project or purpose except as set forth in the contractual agreement between LPA and its Client. The unauthorized disclosure and/or use of the project documents (including the creation of derivative works), may give rise to liability for copyright infringement, unlawful disclosure, use or misappropriation of property rights held by LPA. The unauthorized use of the project documents will give rise to the recovery of monetary losses and damages including attorney fees and costs for which the unauthorized user will be held liable.
Project documents describe the design intent of the work and are not a representation of as-built or existing conditions. LPA is not responsible for any discrepancies between the project documents and the existing conditions.

© LPA, Inc.

ALTADENA ELEMENTARY SCHOOL

743 E Calaveras St,
Altadena, CA 91001

ALTADENA ELEMENTARY SCHOOL

Revision	Date
Addendum 1	04/17/2026

Submittal	Date
100% SCHEMATIC DESIGN	12/05/2025
DSA SUBMITTAL	02/02/2026
DSA SUBMITTAL V2	03/13/2026

	33366
	Checker
	As indicated

E000

ELECTRICAL COVERSHEET

STATE OF CALIFORNIA
Outdoor Lighting
CALIFORNIA ENERGY COMMISSION

CERTIFICATE OF COMPLIANCE		NRCC-LTO-E
This document is used to demonstrate compliance with requirements in 110.9, 130.0, 130.2, 140.7, and 141.0(b)2L for outdoor lighting scopes using the prescriptive path for nonresidential and hotel/motel occupancies. It is also used to document compliance with requirements in 160.5, 170.2(e)6, 180.1(a) and 180.2(b)4Bv for outdoor lighting scopes using the prescriptive path for multifamily and mixed-use occupancies. Multifamily includes dormitory and senior living facilities.		
Project Name: ALTADENA ELEMENTARY SCHOOL	**Report Page:**	**(Page 1 of 8)**
Project Address: 743 E Calaveras St,	**Date Prepared:**	1/28/2026

A. GENERAL INFORMATION				
01	Project Location (city)	Altadena	04 Total Illuminated Hardscape Area (ft^2)	0
02	Climate Zone	9		
03	Outdoor Lighting Zone per Title 24 Part 1 10.114 or as designated by Authority Having Jurisdiction (AHJ):			
☐ LZ-0: Very Low - Undeveloped Parkland	☒ LZ-2: Moderate - Urban Clusters	☐ LZ-4: High - Must be reviewed by CA Energy Commission for Approval		
☐ LZ-1: Low - Rural Areas	☐ LZ-3: Moderately High - Urban Areas			
05	Occupancy Types within Project			
● All Other Occupancies				

B. PROJECT SCOPE

This table includes outdoor lighting systems that are within the scope of the permit application and are demonstrating compliance using the prescriptive path outlined in 140.7 / 170.2(e)6 or 141.0(b)2L / 180.2(b)4Bv for alterations.

My Project Consists of:

01	02	
☒ New Lighting System	Must Comply with Allowances from 140.7 / 170.2(e)6	
☐ Altered Lighting System	Is your alteration increasing the connected lighting load (Watts)?	○ Yes ○ No
03	04	05
% of Existing Luminaires Being Altered[1]	Sum Total of Luminaires Being Added or Altered	Calculation Method
☐ < 10% ☐ >= 10% and < 50% ☐ >= 50%		

Please proceed to Table F. Outdoor Lighting Fixture Schedule to define the project's luminaires.

[1] FOOTNOTES: % of Existing Luminaires Being Altered = (Sum Total of Luminaires Being Added or Altered / Existing Luminaires within the Scope of the Permit Application) x 100.

STATE OF CALIFORNIA
Outdoor Lighting
CALIFORNIA ENERGY COMMISSION

CERTIFICATE OF COMPLIANCE		NRCC-LTO-E
Project Name: ALTADENA ELEMENTARY SCHOOL	**Report Page:**	**(Page 2 of 8)**
	Date Prepared:	1/28/2026

C. COMPLIANCE RESULTS

Results in this table are automatically calculated from data input and calculations in Tables F through N. Note: If any cell on this table says "COMPLIES with Exceptional Conditions" refer to Table D. Exceptional Conditions for guidance or see applicable Table referenced below.

Calculations of Total Allowed Lighting Power (Watts) 140.7 / 170.2(e)6 or 141.0(b)2L / 180.2(b)4Bv											Compliance Results		
01		02		03		04		05		06	07		08	09
General Hardscape Allowance 140.7(d)1 / 170.2(e)6 (See Table I)	+	Per Application 140.7(d)2 / 170.2(e)6 (See Table J)	+	Sales Frontage 140.7(d)2 (See Table K)	+	Ornamental 140.7(d)2 / 170.2(e)6 (See Table L)	+	Per Specific Area 140.7(d)2 / 170.2(e)6 (See Table M)	OR	Existing Power Allowance 141.0(b)2L / 180.2(b)4Bv (See Table N)	= **Total Allowed** (Watts)	≥	**Total Actual** (Watts)	**07 must be >= 08**
0	+	---	+	---	+	---	+	1,416	OR	---	= 1,416	≥	1,416	COMPLIES
Shielding Compliance (See Table G for Details)														N/A
Controls Compliance (See Table H for Details)														Not applicable

D. EXCEPTIONAL CONDITIONS

This table is auto-filled with uneditable comments because of selections made or data entered in tables throughout the form.

E. ADDITIONAL REMARKS

This table includes remarks made by the permit applicant to the Authority Having Jurisdiction.

STATE OF CALIFORNIA
Outdoor Lighting
CALIFORNIA ENERGY COMMISSION

CERTIFICATE OF COMPLIANCE		NRCC-LTO-E
Project Name: ALTADENA ELEMENTARY SCHOOL	**Report Page:**	**(Page 3 of 8)**
	Date Prepared:	1/28/2026

F. OUTDOOR LIGHTING FIXTURE SCHEDULE

For new or altered lighting systems demonstrating compliance with 140.7 / 170.2(e)6 all new luminaires being installed and any existing luminaires remaining or being moved within the spaces covered by the permit application are included in the Table below. For altered lighting systems using the Existing Power method per 141.0(b)2L only new luminaires being installed and replacement luminaires being installed as part of the project scope are included (ie, existing luminaires remaining or existing luminaires being moved are not included). Outdoor lighting attached to multifamily buildings and controlled from the inside of a dwelling unit are included in Table H. and are not included here. All other multifamily outdoor lighting is included here.

Designed Wattage:

01	02		03	04	05	06	07	08	09	10	
Name or Item Tag	Complete Luminaire Description		Watts per luminaire[1, 2]	How is Wattage determined	Total Number Luminaires[2]	Luminaire Status[3]	Excluded per 140.7(a) / 170.2(e)6A	Design Watts	Cutoff Req. > 6,200 initial lumen output 130.2(b) / 160.5(c)1[4]	Field Inspector	
										Pass	Fail
ZN1-2	ZN1-2	☐ Linear	82	Mfr. Spec	5	New	☐	410	NA: < 6200 lumens	☐	☐
ZN1-4	ZN1-4	☐ Linear	82	Mfr. Spec	2	New	☐	164	NA: < 6200 lumens	☐	☐
ZN1-4C	ZN1-4C	☐ Linear	82	Mfr. Spec	2	New	☐	164	NA: < 6200 lumens	☐	☐
ZN1-4H	ZN1-4H	☐ Linear	82	Mfr. Spec	5	New	☐	410	NA: < 6200 lumens	☐	☐
ZN2	ZN2	☐ Linear	82	Mfr. Spec	1	New	☐	82	NA: < 6200 lumens	☐	☐
ZN3-3	ZN3-3	☐ Linear	31	Mfr. Spec	2	New	☐	62	NA: < 6200 lumens	☐	☐
ZN3-4	ZN3-4	☐ Linear	31	Mfr. Spec	2	New	☐	62	NA: < 6200 lumens	☐	☐
ZN3-5	ZN3-5	☐ Linear	31	Mfr. Spec	2	New	☐	62	NA: < 6200 lumens	☐	☐
							Total Design Watts:	1416			

* NOTES: Selections with a * require a note in the space below explaining how compliance is achieved.
EX: Luminaire is lighting a statue; EXCEPTION 2 to 130.2(b)

STATE OF CALIFORNIA
Outdoor Lighting
CALIFORNIA ENERGY COMMISSION

CERTIFICATE OF COMPLIANCE		NRCC-LTO-E
Project Name: ALTADENA ELEMENTARY SCHOOL	**Report Page:**	**(Page 4 of 8)**
	Date Prepared:	1/28/2026

F. OUTDOOR LIGHTING FIXTURE SCHEDULE

For new or altered lighting systems demonstrating compliance with 140.7 / 170.2(e)6 all new luminaires being installed and any existing luminaires remaining or being moved within the spaces covered by the permit application are included in the Table below. For altered lighting systems using the Existing Power method per 141.0(b)2L only new luminaires being installed and replacement luminaires being installed as part of the project scope are included (ie, existing luminaires remaining or existing luminaires being moved are not included). Outdoor lighting attached to multifamily buildings and controlled from the inside of a dwelling unit are included in Table H. and are not included here. All other multifamily outdoor lighting is included here.

Designed Wattage:

01	02	03	04	05	06	07	08	09	10

[1] FOOTNOTES: Authority Having Jurisdiction may ask for Luminaire cut sheets to confirm wattage used for compliance per 130.0(c) / 160.5(b)
[2] For linear luminaires, wattage should be indicated as W/lf instead of Watts/luminaire. Total linear feet should be indicated in column 05 instead of number of luminaires.
[3] Select "New" for new luminaires in a new outdoor lighting project, or for added luminaires in an alteration. Select "Altered" for replacement luminaires in an alteration. Select "Existing to Remain" for existing luminaires within the project scope that are not being altered and are remaining. Select "Existing Reinstalled" for existing luminaires which are being removed and reinstalled as part of the project scope.
[4] Compliance with mandatory shielding requirements is required for luminaires with initial lumen output >= 6,200 unless exempted by 130.2(b)/ 160.5(c)

G. SHIELDING REQUIREMENTS (BUG)

This section does not apply to this project.

STATE OF CALIFORNIA
Outdoor Lighting
CALIFORNIA ENERGY COMMISSION

CERTIFICATE OF COMPLIANCE		NRCC-LTO-E
Project Name: ALTADENA ELEMENTARY SCHOOL	**Report Page:**	**(Page 6 of 8)**
	Date Prepared:	1/28/2026

L. LIGHTING ALLOWANCE: ORNAMENTAL

This section does not apply to this project.

M. LIGHTING ALLOWANCE: PER SPECIFIC AREA

This table includes areas using the wattage allowance per specific area from Table 140.7-B /Table 170.2-S. More than one specific area allowance may be taken in a single project, if applicable. However, multiple specific area allowances may not be taken for the exact same area on the site.

01	02	03	04	05	06	07	08	09	10
		CALCULATED ALLOWANCE (Watts)			DESIGN WATTS				
Area Description	Specific Area Type per Table 140.7-B	Specific Area (ft^2)[1]	Allowed Density (W/ft^2)	Extra Allowance (Watts)	Luminaire Name or Item Tag	Watts per Luminaire	# of Luminaires	Design Watts	Additional Allowance (Watts)
EXTERIOR AREA	StudentDropOffPlace	32100	0.1	1797.6	ZN3-4	31	2	62	1416
					ZN1-4	82	2	164	
					ZN2	82	1	82	
					ZN1-4H	82	5	410	
					ZN1-4C	82	2	164	
					ZN1-2	82	5	410	
					ZN3-3	31	2	62	
					ZN3-5	31	2	62	
					Total Design Watts for this Area:			1416	
					Total Allowance (Watts) All Areas:				1416

[1] FOOTNOTES: See Table 140.7-B /Table 170.2-S for rules for calculating the specific areas (ft^2 for these additional lighting allowances.

STATE OF CALIFORNIA
Outdoor Lighting
CALIFORNIA ENERGY COMMISSION

CERTIFICATE OF COMPLIANCE		NRCC-LTO-E
Project Name: ALTADENA ELEMENTARY SCHOOL	**Report Page:**	**(Page 7 of 8)**
	Date Prepared:	1/28/2026

M. LIGHTING ALLOWANCE: PER SPECIFIC AREA

[2] For luminaires indicated in Table F as linear, wattage in column 07 is W/lf instead of Watts/luminaire. Total linear feet should be indicated in column 08 instead of number of luminaires.

N. EXISTING CONDITIONS POWER ALLOWANCE (alterations only)

This section does not apply to this project.

O. DECLARATION OF REQUIRED CERTIFICATES OF INSTALLATION

Selections have been made based on information provided in this document. If any selection has been changed by permit applicant, an explanation should be included in Table E. Additional Remarks. These documents must be provided to the building inspector during construction and can be found online

Form/Title
NRCI-LTO-E - Must be submitted for all buildings

P. DECLARATION OF REQUIRED CERTIFICATES OF ACCEPTANCE

There are no NRCA forms required for this project.

STATE OF CALIFORNIA
Outdoor Lighting
CALIFORNIA ENERGY COMMISSION

CERTIFICATE OF COMPLIANCE		NRCC-LTO-E
Project Name: ALTADENA ELEMENTARY SCHOOL	**Report Page:**	**(Page 8 of 8)**
Project Address: 743 E Calaveras St,	**Date Prepared:**	1/28/2026

DOCUMENTATION AUTHOR'S DECLARATION STATEMENT

I certify that this Certificate of Compliance documentation is accurate and complete.

Documentation Author Name: Mohammad Assaf	Documentation Author Signature: Mohammad Assaf
Company: IMEG Corp	Signature Date: 2026-01-28
Address: 901 Via Piemonte Suite 400	CEA/ HERS Certification Identification (if applicable):: 901 VIA PIEMONTE
City/State/Zip: ONTARIO CA 91764	Phone: (909)942-554

RESPONSIBLE PERSON'S DECLARATION STATEMENT

I certify the following under penalty of perjury, under the laws of the State of California:
1. The information provided on this Certificate of Compliance is true and correct.
2. I am eligible under Division 3 of the Business and Professions Code to accept responsibility for the building design or system design identified on this Certificate of Compliance (responsible designer)
3. The energy features and performance specifications, materials, components, and manufactured devices for the building design or system design identified on this Certificate of Compliance conform to the requirements of Title 24, Part 1 and Part 6 of the California Code of Regulations.
4. The building design features or system design features identified on this Certificate of Compliance are consistent with the information provided on other applicable compliance documents, worksheets, calculations, plans and specifications submitted to the enforcement agency for approval with this building permit application.
5. I will ensure that a completed signed copy of this Certificate of Compliance shall be made available with the building permit(s) issued for the building, and made available to the enforcement agency for all applicable inspections. I understand that a completed signed copy of this Certificate of Compliance is required to be included with the documentation the builder provides to the building owner at occupancy.

Responsible Designer Name: Nestor Ignacio	Responsible Designer Signature:
Company: IMEG	Date Signed: 2026-01-28
Address: 901 Via Piemonte Suite 400	License: E16934
City/State/Zip: ONTARIO CA 91764	Phone: (909)942-554

STATE OF CALIFORNIA
Outdoor Lighting
CALIFORNIA ENERGY COMMISSION

CERTIFICATE OF COMPLIANCE		NRCC-LTO-E
Project Name: ALTADENA ELEMENTARY SCHOOL	**Report Page:**	**(Page 6 of 8)**
	Date Prepared:	1/28/2026

L. LIGHTING ALLOWANCE: ORNAMENTAL

This section does not apply to this project.

M. LIGHTING ALLOWANCE: PER SPECIFIC AREA

This table includes areas using the wattage allowance per specific area from Table 140.7-B /Table 170.2-S. More than one specific area allowance may be taken in a single project, if applicable. However, multiple specific area allowances may not be taken for the exact same area on the site.

01	02	03	04	05	06	07	08	09	10
		CALCULATED ALLOWANCE (Watts)			DESIGN WATTS				
Area Description	Specific Area Type per Table 140.7-B	Specific Area (ft^2)[1]	Allowed Density (W/ft^2)	Extra Allowance (Watts)	Luminaire Name or Item Tag	Watts per Luminaire	# of Luminaires	Design Watts	Additional Allowance (Watts)
EXTERIOR AREA	StudentDropOffPlace	32100	0.1	1797.6	ZN3-4	31	2	62	1416
					ZN1-4	82	2	164	
					ZN2	82	1	82	
					ZN1-4H	82	5	410	
					ZN1-4C	82	2	164	
					ZN1-2	82	5	410	
					ZN3-3	31	2	62	
					ZN3-5	31	2	62	
					Total Design Watts for this Area:			1416	
					Total Allowance (Watts) All Areas:				1416

[1] FOOTNOTES: See Table 140.7-B /Table 170.2-S for rules for calculating the specific areas (ft^2 for these additional lighting allowances.

LPA
ARCHITECTURE ENGINEERING INTERIOR DESIGN LANDSCAPE ARCHITECTURE PLANNING
949-261-1001 Office
LPADesignStudios.com
5301 California Avenue, Suite 100
Irvine, California 92617

REGISTERED PROFESSIONAL ENGINEER NESTOR C. IGNACIO Lic. E16934 Exp. 6-30-2027 ELECTRICAL STATE OF CALIFORNIA

IMEG
www.imegcorp.com
300 NORTH LAKE AVENUE
12TH FLOOR
PASADENA, CA 91101
P: 626.463.2800 F: 626.463.2801
PROJECT #25007252.00

This document and all other project documents, ideas, aesthetics and designs incorporated therein are instruments of service. All project documents are copyright protected, are the property of LPA, Inc. (LPA) and cannot be lawfully used in whole or in part for any project or purpose except as set forth in the contractual agreement between LPA and its Client. The unauthorized disclosure and/or use of the project documents (including the creation of derivative works), may give rise to liability for copyright infringement, unlawful disclosure, use or misappropriation of property rights held by LPA. The unauthorized use of the project documents will give rise to the recovery of monetary losses and damages including attorney fees and costs for which the unauthorized user will be held liable. Project documents describe the design intent of the work and are not a representation of as-built or existing conditions. LPA is not responsible for any discrepancies between the project documents and the existing conditions.

© LPA, Inc.

ALTADENA ELEMENTARY SCHOOL

743 E Calaveras St,
Altadena, CA 91001

ALTADENA ELEMENTARY SCHOOL

Revision	Date
Addendum 1	04/17/2026

Submittal	Date
100% SCHEMATIC DESIGN	12/05/2025
DSA SUBMITTAL	02/02/2026
DSA SUBMITTAL V2	03/13/2026

	33366
	Checker

E001

OUTDOOR TITLE 24

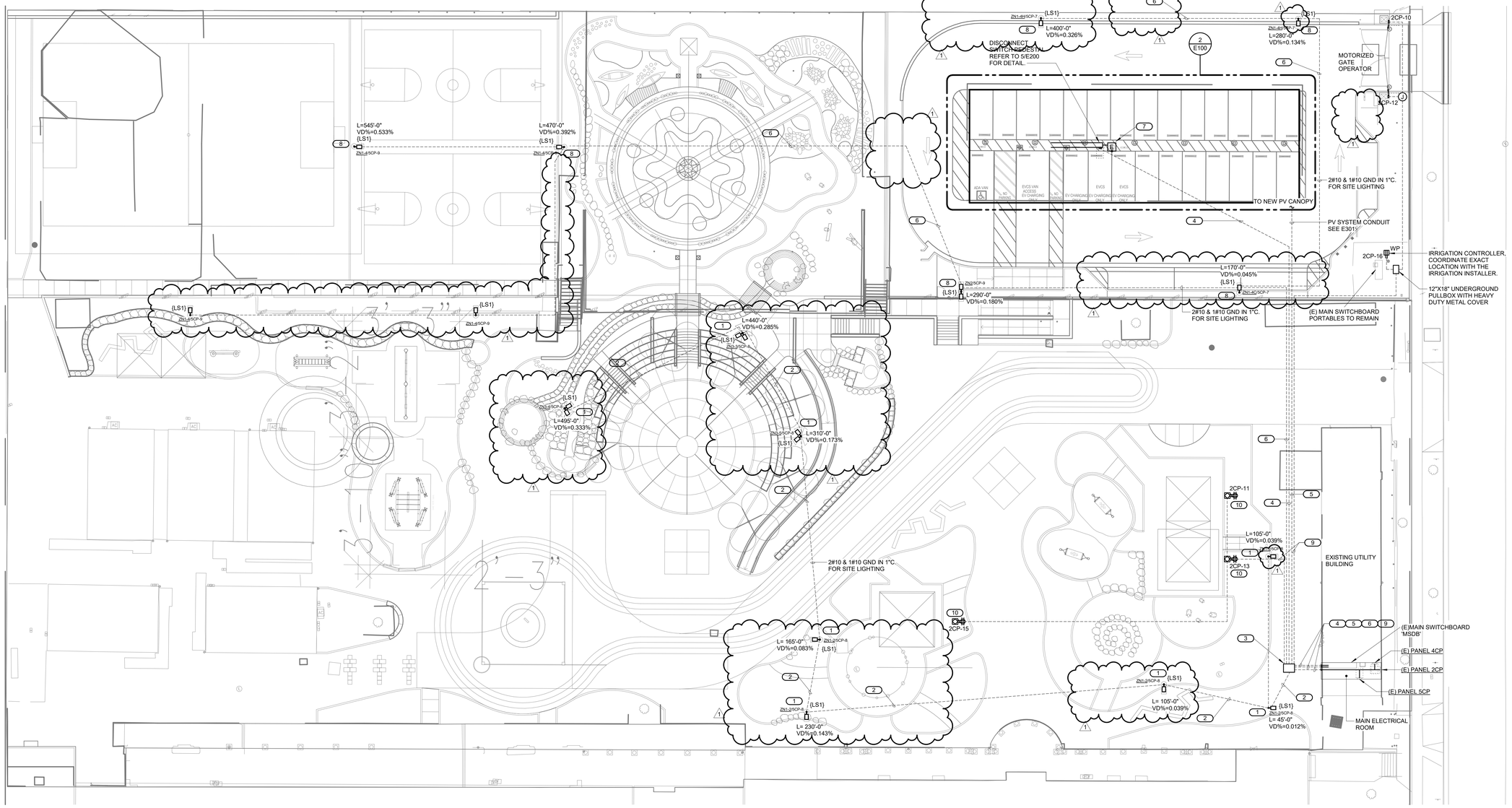

NORTH

1 SITE PLAN - ELECTRICAL

1/16" = 1'-0"

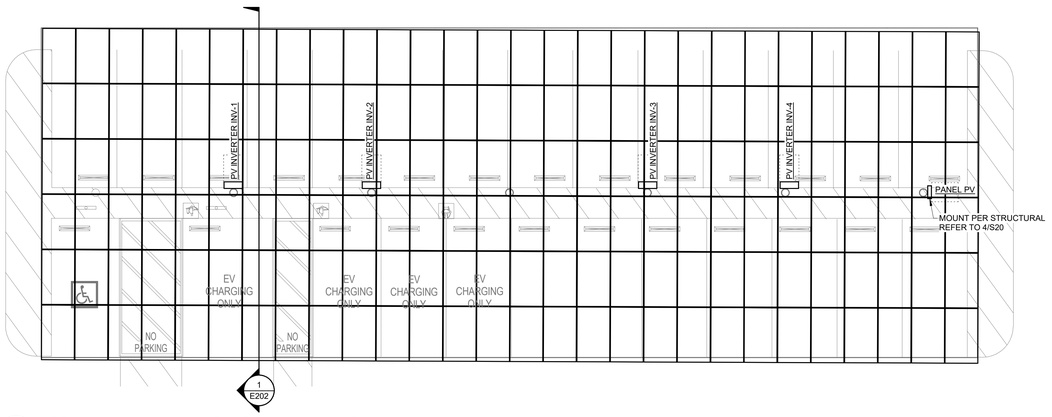

NORTH

2 SITE PLAN - PV SYSTEM LAYOUT

1/8" = 1'-0"

GENERAL NOTES:

1. THE EXISTING BUILDING INCLUDING PORTIONS OF THE RENOVATED AREA SHALL REMAIN IN SERVICE DURING THE CONSTRUCTION PHASE OF THIS PROJECT. ANY MODIFICATIONS TO THE EXISTING ELECTRICAL SYSTEMS THAT MAY REQUIRE TEMPORARY INTERRUPTION OF EXISTING SERVICES SHALL BE COORDINATED AND PRE-SCHEDULED WITH THE OWNER'S REPRESENTATIVE PRIOR TO STARTING ANY WORK.
2. ELECTRICAL ENGINEERING FOR THIS PROJECT IS BASED ON EXISTING DRAWINGS AND A FIELD VISIT OF THE ELECTRICAL SYSTEM. IN CASE OF ANY DISCREPANCIES WITH THE EXISTING FIELD CONDITIONS, ELECTRICAL CONTRACTOR SHALL VERIFY THE EXACT DIFFERENCE AND NOTIFY THE ELECTRICAL ENGINEER FOR POSSIBLE REVISIONS TO THESE DOCUMENTS.
3. MINIMUM UNDERGROUND CONDUIT SIZE SHALL BE 1"C. UNLESS NOTED OTHERWISE.

KEY NOTES: (##)

1. NEW LED LIGHT POLES WITH INTEGRAL MOTION SENSOR AND PHOTOCELL WITH GFCI RECEPTACLE ATTACHED. SEE LIGHTING FIXTURE SCHEDULE FOR ADDITIONAL INFORMATION. ALL GFCI RECEPTACLES CONNECTED TO CIRCUITS '2CP-5'.
2. PROVIDE THE FOLLOWING CONDUITS:
   (2) 2#10 & 1#10 GND IN 1"C
   (1) WILL BE USED FOR 277V SITE LIGHTING CIRCUITRY CONNECTED TO PANEL '5CP'
   (1) WILL BE USED FOR 120V POWER RECEPTACLE CIRCUITRY CONNECTED TO PANEL '2CP'
3. NEW 24" X 24" PRECAST CONCRETE PULLBOX WITH METAL COVER. CONTRACTOR TO FIELD VERIFY EXACT LOCATION ON SITE.
4. PROVIDE NEW 2#2/0 & 1#6 GND IN 2"C FOR NEW ELECTRIC VEHICLE CHARGING STATION (EVCS-1).
5. PROVIDE NEW 4"C FOR NEW PV SOLAR CANOPY.
6. PROVIDE NEW (2) 2#10 & 1#10 GND IN 1"C..
7. EVCS-1
   100AF/80AT
   CHARGEPOINT PEDESTAL, INSTALL PEDESTAL 12"BEHIND CONCRETE CURB/PAVING LIMITS OR AS DIRECTED BY MANUFACTURER. GROUND ROD: PROVIDE 5/8 X 10'-0 COPPER CLAD STEEL GROUND ROD. INSTALL 12" BELOW FINISH GRADE. PROVIDE BARE #6GROUND WIRE WITH EXOTHERMIC WELD FOR BONDING TO EVCS PEDESTAL.
8. NEW LED LIGHT POLES WITH INTEGRAL MOTION SENSOR AND PHOTOCELL. SEE LIGHTING FIXTURE SCHEDULE FOR ADDITIONAL INFORMATION.
9. (3) 2#8, 1#10 IN 1 1/4"C.
10. PROVIDE GFI QUAD RECEPTACLE MOUNTING ON A PEDESTAL. REFER TO MOUNTING DETAIL 6/E200.

LPA
ARCHITECTURE ENGINEERING INTERIOR DESIGN
LANDSCAPE ARCHITECTURE PLANNING
949-261-1001 Office
LPADesignStudios.com
5301 California Avenue, Suite 100
Irvine, California 92617

REGISTERED PROFESSIONAL ENGINEER
NESTOR C. IGNACIO
Lic. E16934
Exp. 6-30-2027
ELECTRICAL
STATE OF CALIFORNIA

IMEG
www.imegcorp.com
300 NORTH LAKE AVENUE
12TH FLOOR
PASADENA, CA 91101
P: 626.463.2800 F: 626.463.2801
PROJECT #25007252.00

This document and all other project documents, ideas, aesthetics and designs incorporated therein are instruments of service. All project documents are copyright protected, are the property of LPA, Inc. (LPA) and cannot be lawfully used in whole or in part for any project or purpose except as set forth in the contractual agreement between LPA and its Client. The unauthorized disclosure and/or use of the project documents (including the creation of derivative works), may give rise to liability for copyright infringement, unlawful disclosure, use or misappropriation of property rights held by LPA. The unauthorized use of the project documents will give rise to the recovery of monetary losses and damages including attorney fees and costs for which the unauthorized user will be held liable.
Project documents describe the design intent of the work and are not a representation of as-built or existing conditions. LPA is not responsible for any discrepancies between the project documents and the existing conditions.

© LPA, Inc.

ALTADENA ELEMENTARY SCHOOL

743 E Calaveras St,
Altadena, CA 91001

ALTADENA ELEMENTARY SCHOOL

Revision	Date
Addendum 1	04/27/2026

	33366
	Checker
	As indicated

E100

SITE PLAN - ELECTRICAL

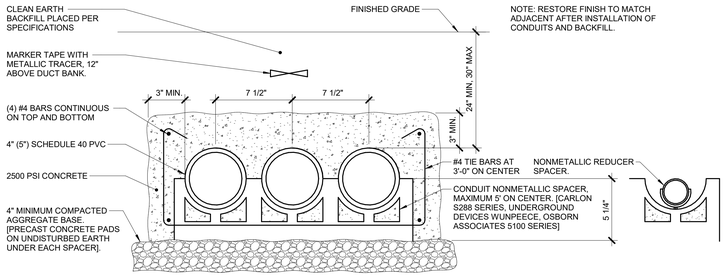

NOTES:

1. INSTALL 2000 lb TENSILE STRENGTH BRAIDED POLYPROPYLENE PULL CORD IN ALL CONDUITS.
2. TRENCHING AND BACKFILL ACCORDING TO SPECIFICATIONS.
3. MINIMUM OF 4'-0" CLEAR BETWEEN ADJACENT DUCTBANKS.
4. DOWEL ENDS OF DUCTBANK TO FOUNDATION OR MANHOLE WITH A MINIMUM OF (4) #4 DOWELS.

1 DUCT BANK DETAIL (3x1)
12" = 1'-0"

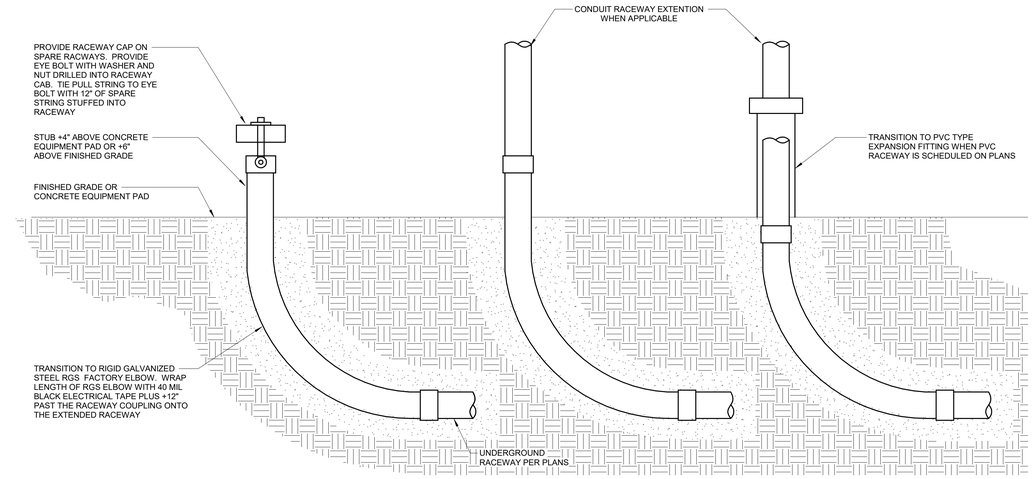

2 TYPICAL CONDUIT STUB UP DETAIL
12" = 1'-0"

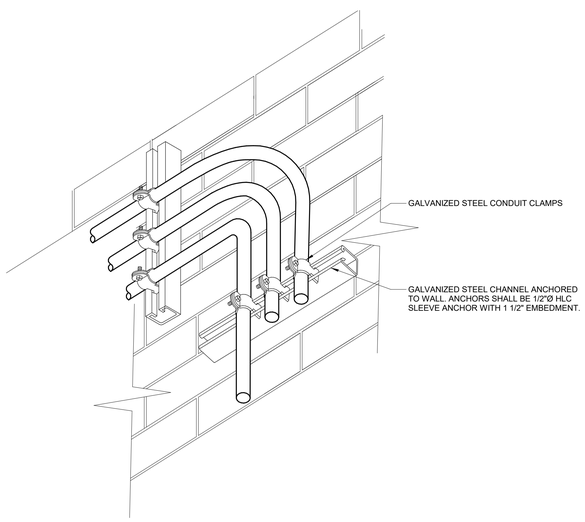

3 CONDUIT WALL SUPPORT
12" = 1'-0"

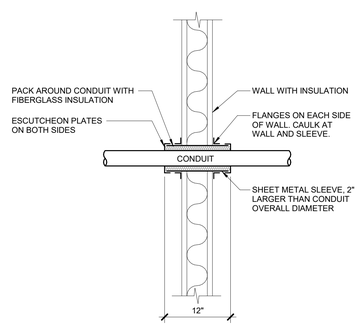

4 CONDUIT WALL PENETRATION
12" = 1'-0"

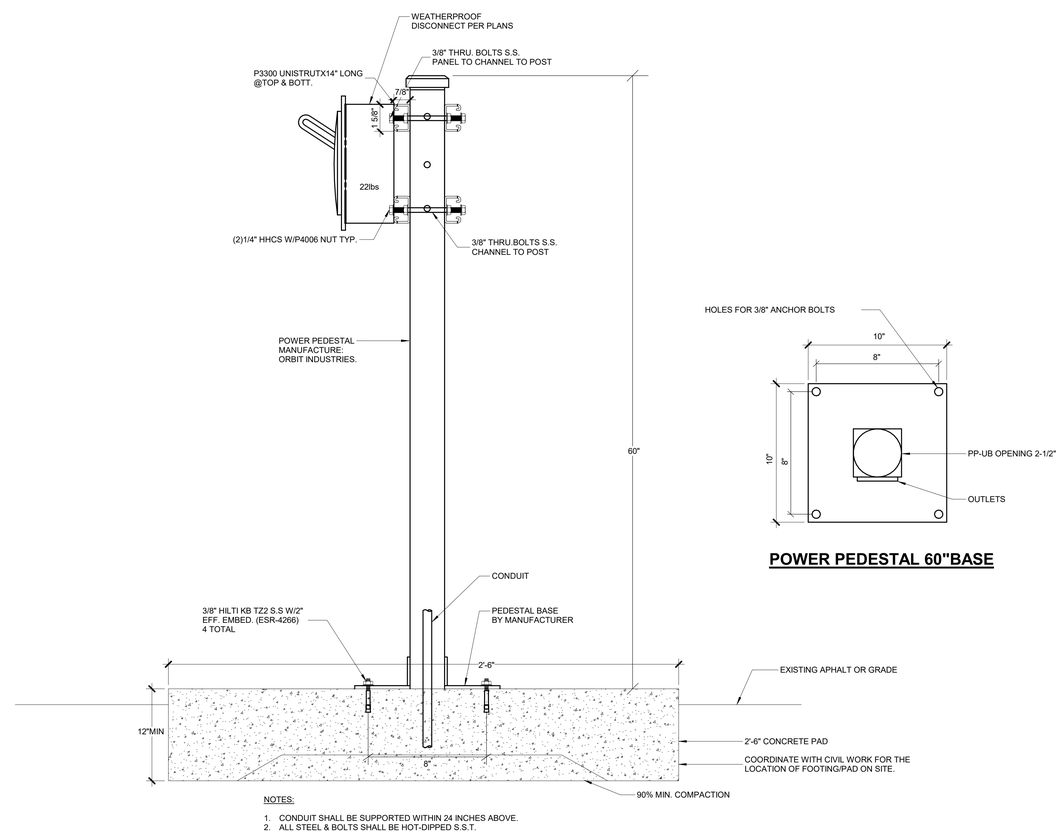

NOTES:

1. CONDUIT SHALL BE SUPPORTED WITHIN 24 INCHES ABOVE.
2. ALL STEEL & BOLTS SHALL BE HOT-DIPPED S.S.T.

5 DISCONNECT SWITCH MOUNTED PEDESTAIL DETAIL
12" = 1'-0"

POWER PEDESTAL 60"BASE

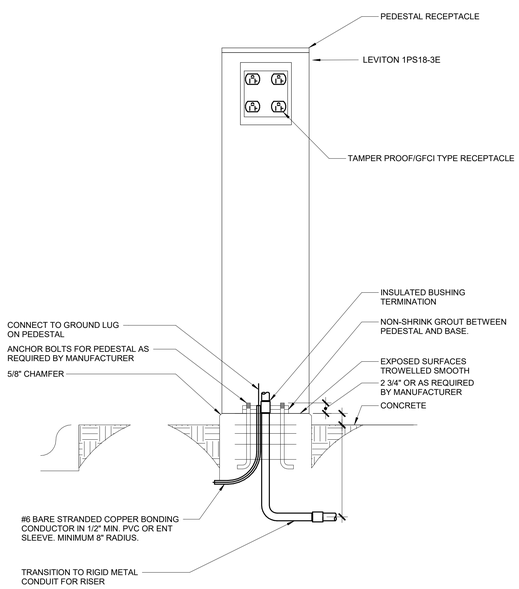

6 ELECTRICAL PEDESTAL RECEPTACLE MOUINTING DETAIL
12" = 1'-0"

LPA
ARCHITECTURE ENGINEERING INTERIOR DESIGN LANDSCAPE ARCHITECTURE PLANNING
949-261-1001 Office
LPADesignStudios.com
5301 California Avenue, Suite 100
Irvine, California 92617

REGISTERED PROFESSIONAL ENGINEER NESTOR C. IGNACIO JR. Lic. E16934 Exp. 6-30-2027 ELECTRICAL STATE OF CALIFORNIA

IMEG
www.imegcorp.com
300 NORTH LAKE AVENUE
12TH FLOOR
PASADENA, CA 91101
P: 626.463.2800 F: 626.463.2801
PROJECT #25007252.00

This document and all other project documents, ideas, aesthetics and designs incorporated therein are instruments of service. All project documents are copyright protected, are the property of LPA, Inc. (LPA) and cannot be lawfully used in whole or in part for any project or purpose except as set forth in the contractual agreement between LPA and its Client. The unauthorized disclosure and/or use of the project documents (including the creation of derivative works), may give rise to liability for copyright infringement, unlawful disclosure, use or misappropriation of property rights held by LPA. The unauthorized use of the project documents will give rise to the recovery of monetary losses and damages including attorney fees and costs for which the unauthorized user will be held liable.
Project documents describe the design intent of the work and are not a representation of as-built or existing conditions. LPA is not responsible for any discrepancies between the project documents and the existing conditions.

© LPA, Inc.

ALTADENA ELEMENTARY SCHOOL

743 E Calaveras St,
Altadena, CA 91001

ALTADENA ELEMENTARY SCHOOL

Revision	Date
Addendum 1	04/17/2026

Submittal	Date
100% SCHEMATIC DESIGN	12/05/2025
DSA SUBMITTAL	02/02/2026
DSA SUBMITTAL V2	03/13/2026

	33366
	Checker
	12" = 1'-0"

E200

ELECTRICAL DETAILS

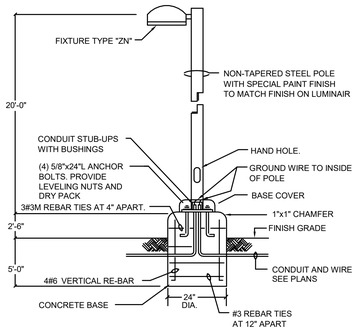

20' POLE BASE DETAIL

1 POLE BASE DETAIL

NO SCALE

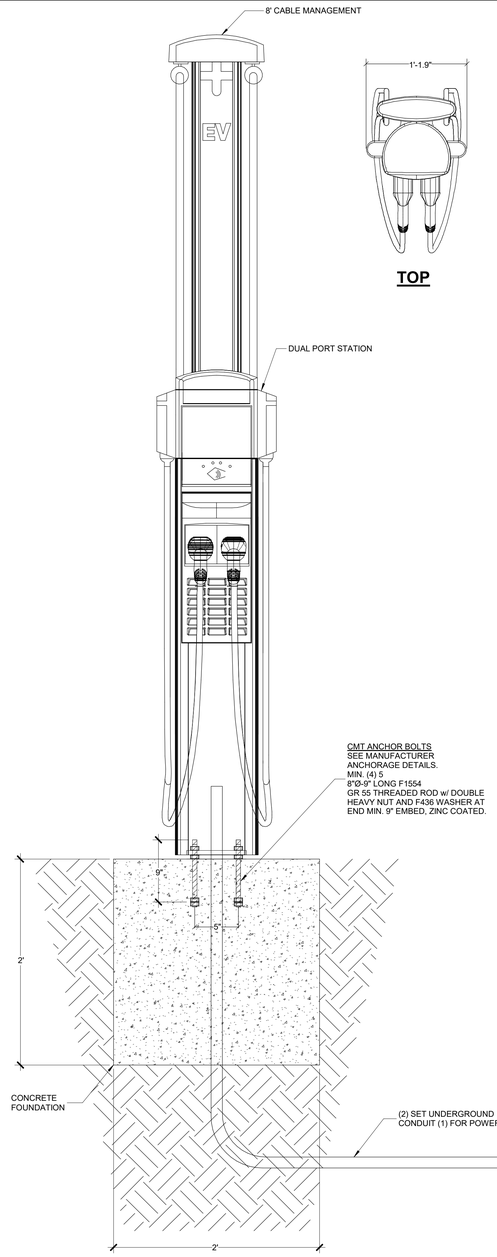

FRONT

TOP

2 ELECTRICAL VEHICLE PEDESTAIL CHARGING STATION DETAIL

NO SCALE

ChargePoint ® CP6000 Series — Fleet

Architectural Drawings and Dimensions

Pedestal Mount

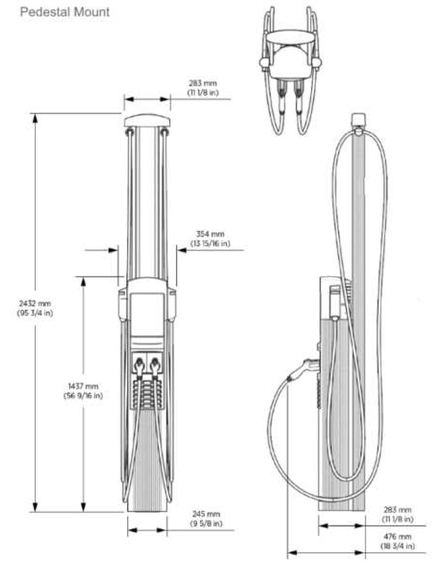

Electrical Input	Single Port (AC Voltage 208 / 240V AC)			Dual Port (AC Voltage 208 / 240V AC)		
	Input Current	Input Power Connection	Required Service Panel Breaker	Input Current	Input Power Connection	Required Service Panel Breaker
Maximum 80A (Standard)	80A	One 100A branch circuit	100A dual pole (non-GFCI)	80A x 2	Two independent 100A branch circuits	100A dual pole (non GFCI) x 2
Maximum 80A (Power Share*)	N/A	N/A	N/A	80A	One 100A branch circuit	100A dual pole (non GFCI)
Power Select** 40A - 64A (Standard)	40A - 64A	One branch circuit rated 125% of input current (50A - 80A)	Dual pole (non-GFCI) rated 125% of input current (50A-80A)	40A - 64A x 2	Two independent branch circuits rated 125% of input current (50A - 80A)	Dual pole (non-GFCI) rated 125% of input current x 2
Power Select 40A - 64A (Power Share)	N/A	N/A	N/A	40A - 64A	One branch circuit rated 125% of input current (50A - 80A)	Dual pole (non-GFCI) rated 125% of input current (50A - 80A)
Service Panel/Breaker GFCI	Do not provide external GFCI as it may conflict with internal GFCI (CCID)					
Wiring – Standard	3-wire (L1, L2, Earth) No neutral			5-wire (L1, L1, L2, L2, Earth)		
Wiring – Power Share	N/A			3-wire (L1, L2, Earth)		
Line to Ground Voltage	120V +/- 10%					

Electrical Output

Electrical Output	Single Port (AC Voltage 208 / 240V AC)	Dual Port (AC Voltage 208 / 240V AC)
Maximum 80A (Standard)	19.2 kW (240V AC @ 80A)	19.2 kW (240V AC @ 80A)
Maximum 80A (Power Share)	N/A	19.2 kW (240V AC @ 80A) x 1 or 9.6 kW (240V AC @ 40A) x 2
Power Select 40A - 64A (Standard)	9.6 kW – 15.4 kW (240V AC @ 40A - 64A)	9.6 kW - 15.4 kW (240V AC @ 40A - 64A) x 2
Power Select 40A - 64A (Power Share)	N/A	9.6 kW - 15.4 kW (240V AC @ 40A - 64A) x 1 or 4.8 kW – 7.7 kW (240V AC @ 20A - 32A) x 2

Mounting and Functional Interfaces

Connector Type	SAE J1772™
Number of Ports	Single, dual
Mounting	Pedestal, wall
Cable Length	23 ft (7 m)
Cable Management	Yes
Authentication	RFID: ISO 15693, ISO 14443, NEMA EVSE 1.2-2015 (UR) NFC (Tap to Charge) Remote: mobile and in vehicle (if supported by vehicle)
Locking Holster	Yes
ISO 15118	Supported by hardware

Safety and Connectivity Features

Ground Fault Detection	20 mA CCID with auto retry
Open Safety Ground Detection	Continuously monitors presence of safety (green wire) ground connection
Plug-Out Detection	Power terminated per SAE J1772™ specifications

Power Measurement Accuracy	+/- 2% from 2% to full scale
Power Report/Store Interval	15-minute interval aligned to hour. Responsive to load management signals.
Local Area Network	Wi-Fi 2.4 GHz and 5GHz (802.11 a/n/b/g)
Wide Area Network	LTE Category 4
Network Communication Protocol	OCPP 2.0.1
Ethernet connection	Capable with accessory

Safety and Operational Ratings

Station Enclosure Rating	Type 3R
Safety and Compliance	UL and cUL listed; complies with UL 2594, UL 2231-1, UL 2231-2, and NEC Article 625
Station Surge Protection	6 kV @ 3,000A. In geographic areas subject to frequent thunderstorms, supplemental surge protection at the service panel is recommended.
EMC Compliance	FCC Part 15 Class B
Operating Temperature	-40°C to 50°C (-40°F to 122°F)
Non-Operating Temperature	-40°C to 60°C (-40°F to 140°F)
Terminal Block Temperature Rating	105°C (221°F)
Operating Humidity	Up to 85% @ 50°C (122°F) non-condensing
Non-Operating Humidity	Up to 95% @ 50°C (122°F) non-condensing

LPA
ARCHITECTURE ENGINEERING INTERIOR DESIGN LANDSCAPE ARCHITECTURE PLANNING
949-261-1001 Office
LPADesignStudios.com
5301 California Avenue, Suite 100
Irvine, California 92617

REGISTERED PROFESSIONAL ENGINEER NESTOR C. IGNACIO JR. Lic. E16934 Exp. 6-30-2027 ELECTRICAL STATE OF CALIFORNIA

IMEG
www.imegcorp.com
300 NORTH LAKE AVENUE
12TH FLOOR
PASADENA, CA 91101
P: 626.463.2800 F: 626.463.2801
PROJECT #25007252.00

This document and all other project documents, ideas, aesthetics and designs incorporated therein are instruments of service. All project documents are copyright protected, are the property of LPA, Inc. (LPA) and cannot be lawfully used in whole or in part for any project or purpose except as set forth in the contractual agreement between LPA and its Client. The unauthorized disclosure and/or use of the project documents (including the creation of derivative works), may give rise to liability for copyright infringement, unlawful disclosure, use or misappropriation of property rights held by LPA. The unauthorized use of the project documents will give rise to the recovery of monetary losses and damages including attorney fees and costs for which the unauthorized user will be held liable.
Project documents describe the design intent of the work and are not a representation of as-built or existing conditions. LPA is not responsible for any discrepancies between the project documents and the existing conditions.

© LPA, Inc.

ALTADENA ELEMENTARY SCHOOL

743 E Calaveras St,
Altadena, CA 91001

ALTADENA ELEMENTARY SCHOOL

Revision	Date
Addendum 1	04/17/2026

Submittal	Date
100% SCHEMATIC DESIGN	12/05/2025
DSA SUBMITTAL	02/02/2026
DSA SUBMITTAL V2	03/13/2026

	33366
	Checker
	12" = 1'-0"

E201

ELECTRICAL DETAILS

Components

Component	Name	Count
Inverters	Sunny Tripower X 20-US (SMA)	4 (80.00 kW)
AC Panels	4 input AC Panel	1
AC Home Runs	1/0 AWG (Copper)	1 (882.7 ft)
AC Home Runs	6 AWG (Aluminum)	4 (1,032.7 ft)
Strings	12 AWG (Copper)	12 (591.3 ft)
Module	REC Solar, REC620AA PRO M (2025) (620W)	168 (104.16 kW)

Wiring Zones

Description	Combiner Poles	String Size	Stringing Strategy
Wiring Zone	-	11-14	Along Racking

Field Segments

Description	Racking	Orientation	Tilt	Azimuth	Intrarow Spacing	Frame Size	Frames	Modules	Power
Field Segment 1	Fixed Tilt	Portrait (Vertical)	Module: 5°	Module: 201°	0.1 ft	6x1	28	168	104.16 kW

Design 1 Altadena Elementary, 743 E Calaveras St

Report

Project Name	Altadena Elementary
Project Address	743 E Calaveras St
Prepared By	Brian Leavitt brian.j.leavitt@imegcorp.com

System Metrics

Design	Design 1
Module DC Nameplate	104.16 kW
Inverter AC Nameplate	80.00 kW Load Ratio: 1.30
Annual Production	177.4 MWh
Performance Ratio	83.6%
kWh/kWp	1,703.1
Weather Dataset	TMY, 10km grid (34.15,-118.15), NREL (prospector)
Simulator Version	f65ad8d185-3c0c8b6ac8-7af8c7a02b-9321ff9565

Project Location

Monthly Production

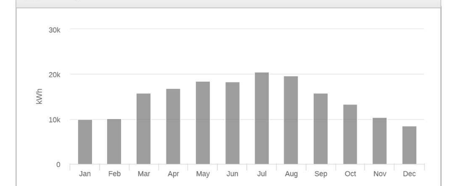

Month	GHI (kWh/m²)	POA (kWh/m²)	Shaded (kWh/m²)	Nameplate (kWh)	Grid (kWh)
January	98.9	109.6	109.6	10,610.9	9,883.4
February	104.6	111.9	111.9	10,933.9	10,164.7
March	166.9	175.1	175.1	17,256.0	15,760.9
April	188.3	192.8	192.8	19,069.8	16,802.8
May	215.2	217.2	217.2	21,550.2	18,458.4
June	215.8	217.2	217.2	21,582.6	18,251.2
July	242.1	243.9	243.9	24,253.3	20,533.1
August	224.6	229.3	229.3	22,797.0	19,584.6
September	174.2	181.0	181.0	17,887.2	15,789.2
October	139.7	149.3	149.3	14,644.7	13,323.4
November	105.2	115.5	115.5	11,222.7	10,357.1
December	84.6	93.9	93.9	9,059.2	8,486.5

Sources of System Loss

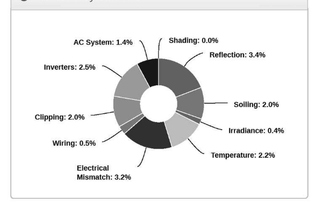

Detailed Layout2

Annual Production

	Description	Output	% Delta
Irradiance (kWh/m²)	Annual Global Horizontal Irradiance	1,960.0	
	POA Irradiance	2,036.7	3.9%
	Shaded Irradiance	2,036.7	0.0%
	Irradiance after Reflection	1,967.8	-3.4%
	Irradiance after Soiling	1,928.5	-2.0%
	Total Collector Irradiance	1,928.5	0.0%
Energy (kWh)	Nameplate	200,867.4	
	Output at Irradiance Levels	200,144.2	-0.4%
	Output at Cell Temperature Derate	195,641.7	-2.2%
	Output after Electrical Mismatch	189,312.9	-3.2%
	Optimal DC Output	188,290.2	-0.5%
	Constrained DC Output	184,597.2	-2.0%
	Inverter Output	179,890.1	-2.5%
	Energy to Grid	177,395.3	-1.4%
Temperature Metrics			
	Avg. Operating Ambient Temp		15.7 °C
	Avg. Operating Cell Temp		26.3 °C
Simulation Metrics			
	Operating Hours		4639
	Solved Hours		4639

Condition Set

Description	Condition Set 1											
Weather Dataset	TMY, 10km grid (34.15,-118.15), NREL (prospector)											
Solar Angle Location	Meteo Lat/Lng											
Transposition Model	Perez Model											
Temperature Model	Sandia Model											
Temperature Model Parameters	Rack Type	a	b	Temperature Delta								
	Fixed Tilt	-3.56	-0.075	3°C								
	Flush Mount	-2.81	-0.0455	0°C								
	East-West	-3.56	-0.075	3°C								
	Carport	-3.56	-0.075	3°C								
Soiling (%)	J	F	M	A	M	J	J	A	S	O	N	D
	2	2	2	2	2	2	2	2	2	2	2	2
Albedo	J	F	M	A	M	J	J	A	S	O	N	D
	0.20	0.20	0.20	0.20	0.20	0.20	0.20	0.20	0.20	0.20	0.20	0.20
Rear Mismatch Loss	10%	Rear Shading Factor	5%									
Module Transparency	0%											
Irradiation Variance	5%											
Cell Temperature Spread	4° C											
Module Binning Range	-2.5% to 2.5%											
AC System Derate	0.50%											

Module & Component Characterizations	Type	Component	Characterization	Bifacial
	Module	REC620AA PRO M (2025) (REC Solar)	Spec Sheet Characterization, PAN	False
	Inverter	Sunny Tripower X 20-US (SMA)	Spec Sheet	N/A

SOLAR'S MOST TRUSTED REC

REC ALPHA® PRO M

DATASHEET

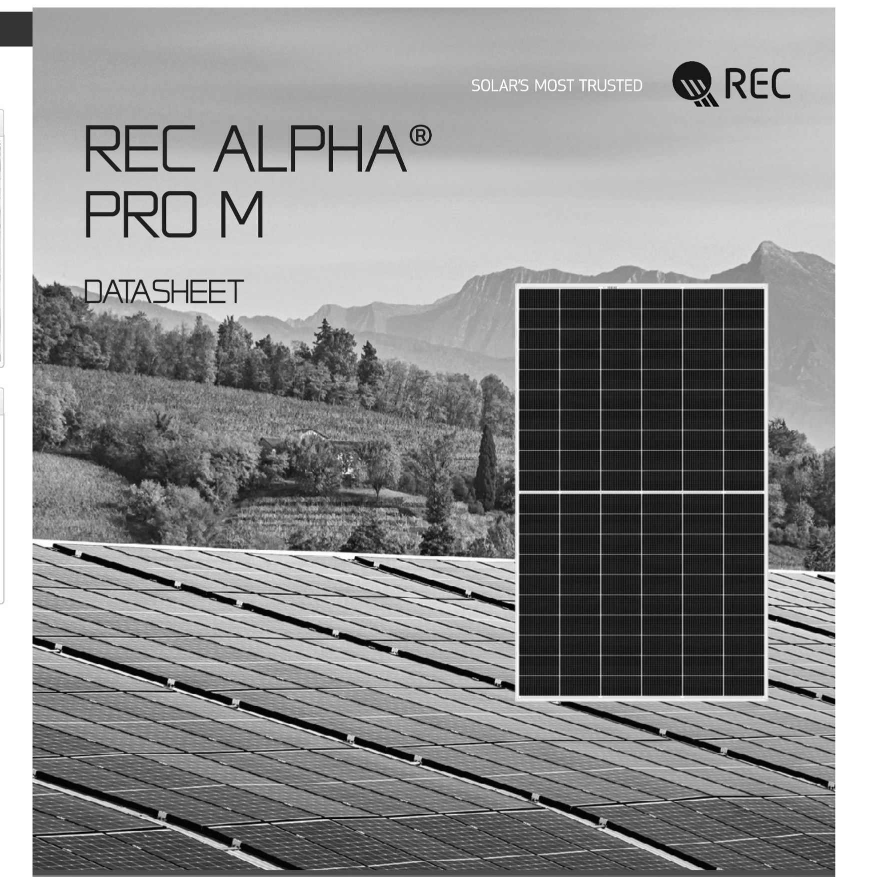

600 - 640W HETEROJUNCTION TECHNOLOGY

22.5% MAX EFFICIENCY

>92% POWER IN YEAR 25

-0.24%/°C TEMPERATURE COEFFICIENT OF P_{MAX}

REC 25 YEAR PRODUCT LABOR PERFORMANCE ProTrust WARRANTY ELIGIBLE

REC ALPHA® PRO M DATASHEET

REC SOLAR'S MOST TRUSTED

GENERAL DATA

Cell Type	120 half-cut REC bifacial heterojunction cells
Glass	0.13 in solar glass with anti-reflective surface treatment in accordance with EN12150
Backsheet	Highly resistant polymer (White)
Frame	Anodized aluminum (Silver)
Junction Box	3-part, 3 bypass diodes, IP68 rated, in accordance with IEC 62790:2020
Connectors	Stäubli MC4 PV-KBT4-EVO2/KST4-EVO2 (12 AWG; MC4-EVO2) in accordance with IEC 62852:2014, IP68 only when connected
Cable	12 AWG solar cable, 51.2 in (1.30 m) + 51.2 in (1.30 m) in accordance with EN50618:2014
Dimensions	85.6 x 51.4 x 1.2 in (30.6 ft²) / 2175 x 1305 x 30 mm (2.84 m²)
Weight	71.6 lb / 32.5 kg
Origin	Made in Singapore

Measurements in [inches] and mm

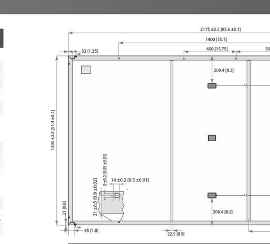

Specifications subject to change without notice.

ELECTRICAL DATA

PRODUCT CODE*: RECXXXAA PRO M

STC	Power Output - P_{MAX} (WP)	600	610	620	630	640
	Watt Class Sorting - (W)	0/+10	0/+10	0/+10	0/+10	0/+10
	Nominal Power Voltage - V_{MPP} (V)	36.0	36.3	36.6	36.8	37.1
	Nominal Power Current - I_{MPP} (A)	16.67	16.81	16.94	17.12	17.26
	Open Circuit Voltage - V_{OC} (V)	44.2	44.3	44.4	44.5	44.6
	Short Circuit Current - I_{SC} (A)	17.65	17.72	17.79	17.86	17.93
	Power Density (W/ft²)	19.6	19.9	20.3	20.6	20.9
	Panel Efficiency (%)	21.1	21.5	21.8	22.2	22.5
NMOT	Power Output - Pmax (WP)	457	464	472	480	487
	Nominal Power Voltage - V_{MPP} (V)	33.9	34.2	34.5	34.7	35.0
	Nominal Power Current - I_{MPP} (A)	13.46	13.58	13.68	13.83	13.94
	Open Circuit Voltage - V_{OC} (V)	41.7	41.7	41.8	41.9	42.0
	Short Circuit Current - I_{SC} (A)	14.26	14.31	14.37	14.43	14.48

Values at standard test conditions (STC: air mass AM1.5, irradiance 1000 W/m², temperature 25°C), based on a production spread with a tolerance of P_{MAX}, V_{OC} & I_{SC} ±3% within one watt class. Nominal module operating temperature (NMOT: air mass AM1.5, irradiance 800 W/m², temperature 20°C, windspeed 1 m/s). *Where xxx indicates the nominal power class (P_{MAX}) at STC above.

TEMPERATURE COEFFICIENT*

P_{MAX} -0.24%/°C V_{OC} -0.24%/°C I_{SC} 0.04%/°C *The temperature coefficients stated are linear values

MODULE RATINGS

Module Operating Temperature [T98]§	158°F (70°C)
Min Environmental Temperature	-40°F (-40°C)
Nominal Module Operating Temperature	44 ± 2°C
Max Hail Rating	35 mm @ 27.2 m/s
System Voltage	1500 V
Max Series Fuse Rating	35 A
Max Reverse Current	35 A

§ 98th percentile operating temperature

MAXIMUM TEST LOAD*

Front (4-Point)*	+5400 Pa (113 lbs/ft²)
Rear (4-Point)*	-2400 Pa (50 lbs/ft²)

Design load = Test load / 1.5 (safety factor)
*IEC61730/UL61730 certified. Refer to installation manual.

CERTIFICATIONS

ISO14001; ISO9001; IEC45001; IEC62941	
IEC 61215:2021; IEC 61730:2023; UL 61730	
ISO 11925-2	Ignitability (EN 13501-1 Class E)
IEC 61701	Salt Mist (SM6)
IEC 61215:2016	Hailstone (35mm)
UL 61730	Fire Type 1

WARRANTY

	Standard	REC ProTrust	
Installed by an REC Certified Professional	No	Yes	Yes
System Size	All	<25 kW	25-500 kW
Product Warranty (yrs)	20	25	25
Power Warranty (yrs)	25	25	25
Labor Warranty (yrs)	0	25	10
Power in Year 1	98%	98%	98%
Annual Degradation	0.25%	0.25%	0.25%
Power in Year 25	92%	92%	92%

REC ProTrust Warranty applies only for i) REC panels installed by an REC Certified Solar Professional, and ii) panels have been registered by the installer with REC. Subject to System Size and further conditions. See www.recgroup.com for details.

DELIVERY INFORMATION

Panels per Pallet	33
Panels per 40 ft GP/high cube container	528 (16 Pallets)
Panels per 53 ft truck	594 (18 Pallets)

LOW LIGHT BEHAVIOR

Typical low irradiance performance of module at STC:

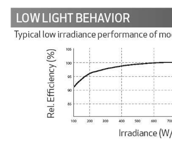

Available from:

Founded in 1996, REC Group is an international pioneering solar energy company dedicated to empowering consumers with clean, affordable solar power. As Solar's Most Trusted, REC is committed to high quality, innovation, and a low carbon footprint in the solar materials and solar panels it manufactures. Headquartered in Norway with operational headquarters in Singapore, REC also has regional hubs in North America, Europe, and Asia-Pacific.

REC Solar PTE. LTD.
20 Tuas South Ave. 14
Singapore 637312
post@recgroup.com
www.recgroup.com

REF: PM-DS-12-06-REV-13/0 UL EN 6.2025

SUNNY TRIPOWER X 20-US / 25-US / 30-US
powered by ennexOS

SMA

Integrated system manager
- Monitoring and control for up to 5 inverters (max. 150 kVA)
- Remote access with Sunny Portal powered by ennexOS
- SMA Dynamic Power Control

Enhanced safety
- Integrated SunSpec PLC signal for module-level shutdown
- Advanced DC AFCI arc-fault protection
- Optional DC type 2 and type 1+2 surge protection

Maximum yields
- Three MPP trackers for flexible array design
- SMA ShadeFix string level optimization
- Intelligent string performance monitoring and I-V curve diagnostics

Smart monitoring, control, service
- SMA Smart Connected proactive monitoring and service solution
- SMA ennexOS cross-sector energy management platform
- Centerpiece of the proven SMA Energy System Business

SUNNY TRIPOWER X 20-US / 25-US / 30-US

Integrated intelligence for future-proof system design

Sunny Tripower X is the new innovative inverter solution for commercial PV systems. Providing three MPP trackers with SMA ShadeFix string optimization technology for optimal PV array design flexibility and maximum energy yields. SMA's proven integrated rapid shutdown support and reliable DC AFCI arc-fault protection ensure enhanced system safety. And now with the new integrated System Manager, powered by SMA's ennexOS cross-sector energy management platform, Sunny Tripower X becomes the centerpiece of the SMA Energy System Business for comprehensive commercial energy systems now and in the future.

Technical Data*	Sunny Tripower X 20-US	Sunny Tripower X 25-US	Sunny Tripower X 30-US
Input (DC)			
Maximum PV array power	30000 Wp	37500 Wp	45000 Wp
Maximum input voltage		1000 V	
MPP voltage range	345 V to 800 V	430 V to 800 V	515 V to 800 V
Minimum input voltage / initial input voltage		150 V / 188 V	
Maximum operating input current / short-circuit current per MPP tracker		24 A / 37.5 A	
Number of independent MPP trackers / string inputs per MPP tracker		3 / 2	
Output (AC)			
Nominal output power	20000 W	25000 W	30000 W
Maximum apparent power	20000 VA	25000 VA	30000 VA
Nominal AC voltage		480 V / 277 V	
AC voltage range		244 V to 305 V	
Rated grid frequency / range		60 Hz / 50 Hz to 66 Hz	
Maximum output current	24 A	30 A	36 A
Power factor at rated power / adjustable displacement		1 / 0.0 overexcited to 0.0 underexcited	
Output phasess / line connection		3 / 3-(N)-PE	
Harmonics (THD)		< 3 %	
Efficiency			
CEC efficiency	98 %	98.5 %	98.5 %
Protection and safety features			
Load rated DC disconnect		●	
Ground fault monitoring / grid monitoring		● / ●	
DC reverse polarity protection / AC short-circuit protection		● / ●	
All-pole sensitive residual-current monitoring unit		●	
Protection class / overvoltage category		I / III	
DC AFCI arc-fault protection		●	
SunSpec PLC signal for rapid shutdown		●	
DC surge protection type 2 / DC surge arrester type 1+2		○ / ○	
DC terminal cover for conduit connection		○	
General data			
Dimensions (W/H/D)		728 mm / 762 mm / 266 mm (28.7 in / 30 in / 10.5 in)	
Device Weight		35 kg / 77 lbs	
Operating temperature range		-25°C to +60°C (-13°F to +140°F)	
Noise emission (typical)		59 db(A)	
Topology / cooling concept		Transformerless / OptiCool (forced convection, variable speed fans)	
Enclosure protection rating		Type 4 (as per UL 50E)	
Maximum permissible value for relative humidity (non-condensing)		100 %	
Features / functions / accessories			
Mounting type		Vertical rack / wall mount to 15° from horizontal	
DC connection / AC connection		Amphenol H4 Plus / spring-cage terminal	
LED indicators (status / fault / communication)		●	
Network interfaces: Ethernet / WLAN / RS485		● (2 ports) / ● / ○	
Data protocols: SMA Modbus / SunSpec Modbus / Speedwire		● / ● / ●	
Multi-function relay / Extension module slot / Digital inputs		● / ● / ● (6 inputs)	
SMA ShadeFix string level optimization		●	
Intelligent string performance monitoring / I-V curve diagnostics		● / ●	
Integrated Plant Control / Q on Demand 24/7		● / ●	
SMA Smart Connected (proactive monitoring and service support)		●	
Warranty: 10 / 15 / 20 years		● / ○ / ○	
Certificates and approvals (pending)			
Certificates and approvals		UL 62109-1, UL 1699B Ed. 1, CAN/CSA 22.2 No. 62109-1:16 / 62109-2:16, PV Rapid Shutdown System Equipment in accordance with UL1741:2021	
FCC compliance		FCC Part 15 Class A & B	
Grid interconnection standards		UL 1741 SB, IEEE 1547:2018, compliance to SRDs: CA Rule 21, HECO Rule 14H, ISO-NE	
Integrated system manager			
Maximum number of supported inverters / energy meters		5 / 1	
Maximum system power PV inverters (nominal AC power)		150 kVA	
Centralized commissioning of all devices in the system		●	
Remote parameterization of SMA devices		● (via Sunny Portal powered by ennexOS)	
SMA Dynamic Power Control (e.g. zero export / Volt-VAr)		○	
Type designation	STP 20-US-50	STP 25-US-50	STP 30-US-50

● Standard features ○ Optional – Not available Data in nominal conditions Last revision: 09/2022 *Preliminary technical data, subject to change

Accessories

- SMA Data Manager M EDMM-US-10
- DC terminal cover DC-TERM-COVER
- SMA RS485 Module MD.485-US-40
- SMA Sensor Module MD.SEN-US-40
- DC Surge Protection Kits T2: DC_SPD_KIT6-10 T1+2: DC_SPD_KIT7_T1T2

Toll Free +1 888 4 SMA USA
www.SMA-America.com

SMA America, LLC

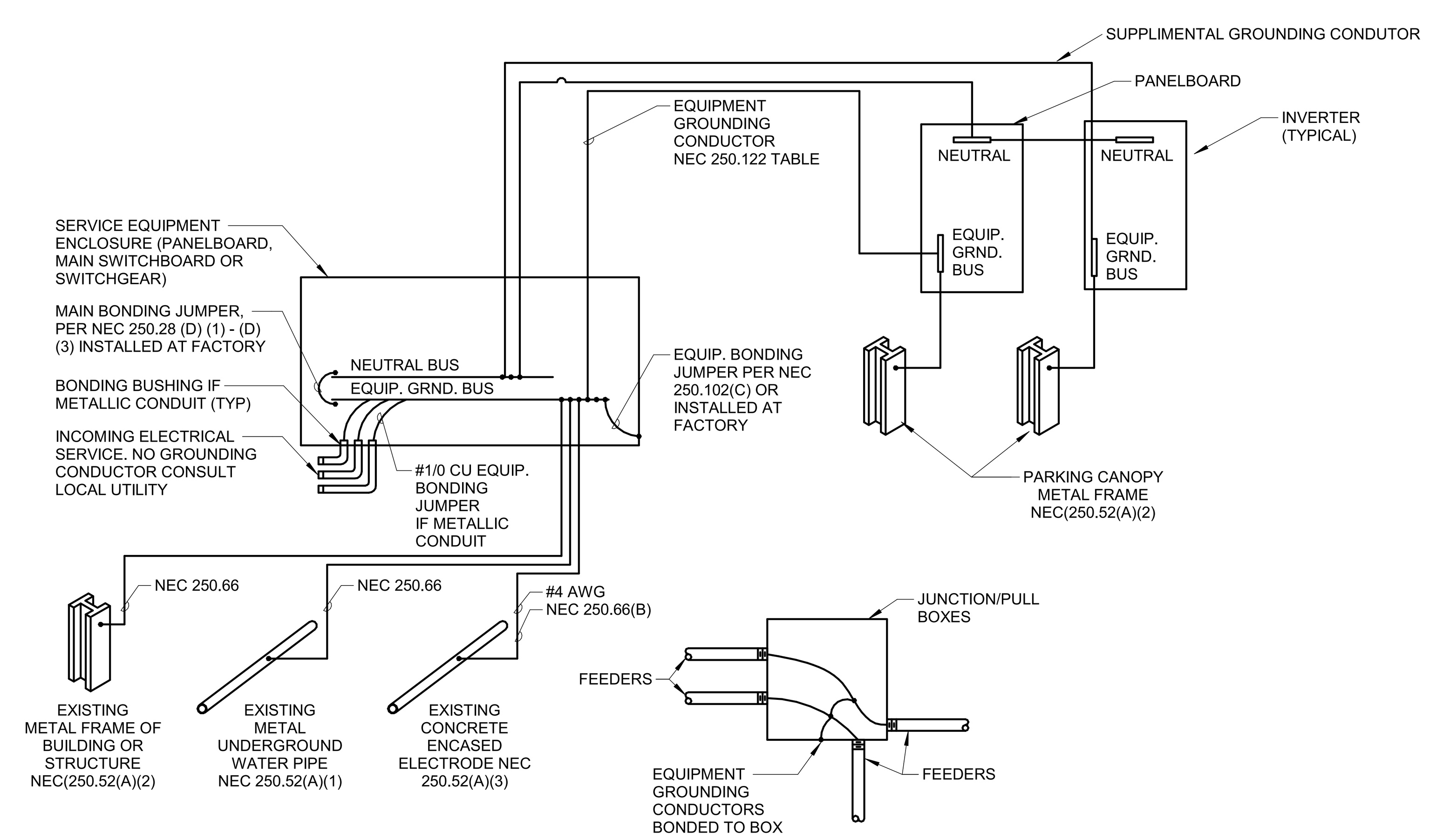

2 ELECTRICAL SYSTEM GROUNDING DETAIL

NO SCALE

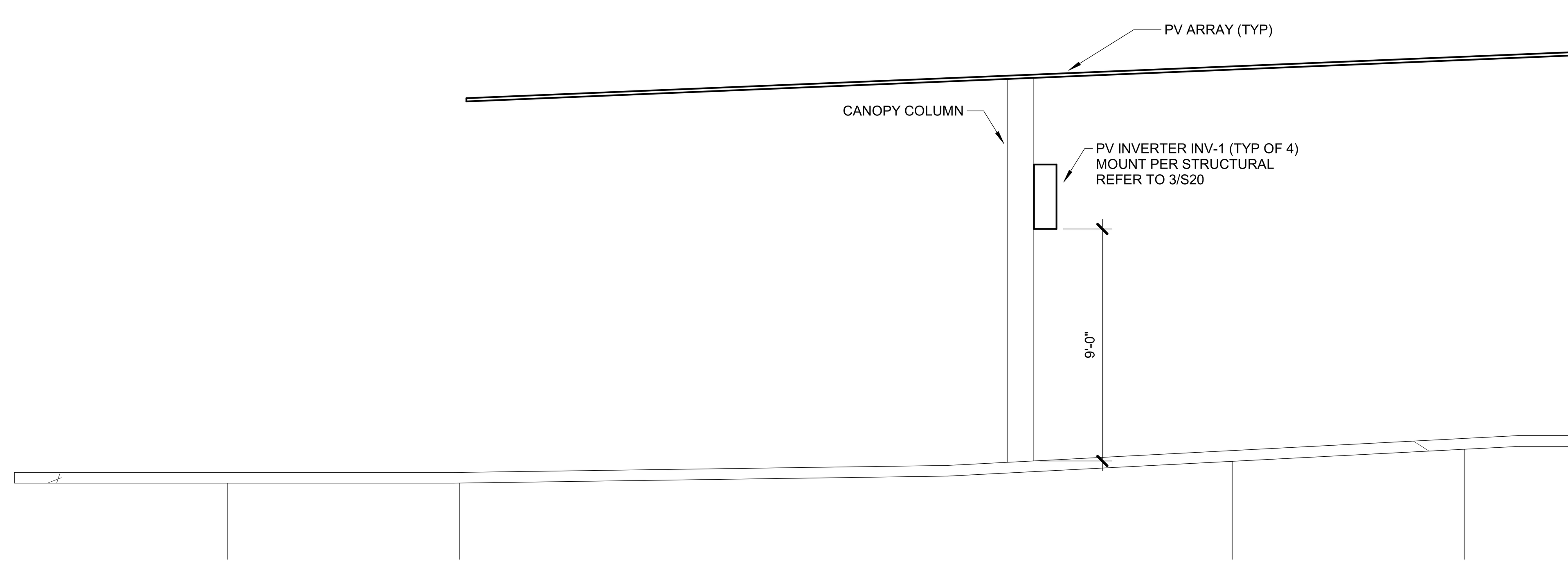

1 PV Canopy Elevation

1/4" = 1'-0"

LPA
ARCHITECTURE ENGINEERING INTERIOR DESIGN LANDSCAPE ARCHITECTURE PLANNING
949-261-1001 Office
LPADesignStudios.com
5301 California Avenue, Suite 100
Irvine, California 92617

REGISTERED PROFESSIONAL ENGINEER NESTOR C. IGNACIO, JR. Lic. E16934 Exp. 6-30-2027 ELECTRICAL STATE OF CALIFORNIA

IMEG
www.imegcorp.com
300 NORTH LAKE AVENUE
12TH FLOOR
PASADENA, CA 91101
P: 626.463.2800 F: 626.463.2801
PROJECT #25007252.00

This document and all other project documents, ideas, aesthetics and designs incorporated therein are instruments of service. All project documents are copyright protected, are the property of LPA, Inc. (LPA) and cannot be lawfully used in whole or in part for any project or purpose except as set forth in the contractual agreement between LPA and its Client. The unauthorized disclosure and/or use of the project documents (including the creation of derivative works), may give rise to liability for copyright infringement, unlawful disclosure, use or misappropriation of property rights held by LPA. The unauthorized use of the project documents will give rise to the recovery of monetary losses and damages including attorney fees and costs for which the unauthorized user will be held liable.
Project documents describe the design intent of the work and are not a representation of as-built or existing conditions. LPA is not responsible for any discrepancies between the project documents and the existing conditions.

© LPA, Inc.

ALTADENA ELEMENTARY SCHOOL

743 E Calaveras St,
Altadena, CA 91001

ALTADENA ELEMENTARY SCHOOL

Revision	Date
Addendum 1	04/17/2026

Submittal	Date
100% SCHEMATIC DESIGN	12/05/2025
DSA SUBMITTAL	02/02/2026
DSA SUBMITTAL V2	03/13/2026

	33366
	Checker
	As indicated

E202

ELECTRICAL DETAILS

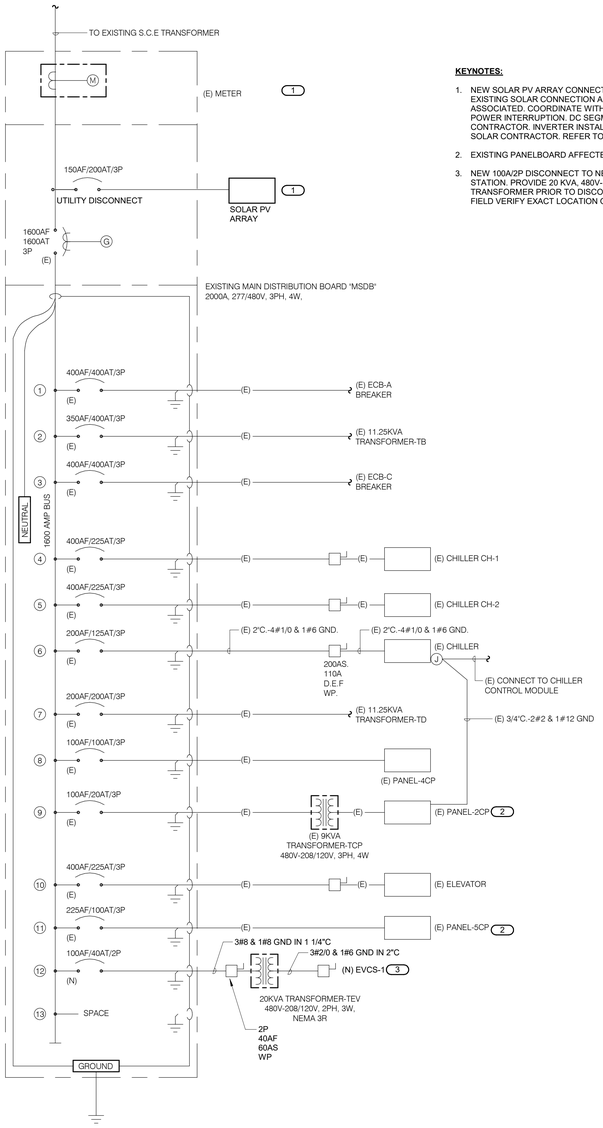

KEYNOTES:

1. NEW SOLAR PV ARRAY CONNECTION AT EXISTING 'MSDB'. DEMOLISH EXISTING SOLAR CONNECTION AND ALL FEEDERS/ CONTROLS ASSOCIATED. COORDINATE WITH UTILITY TO INSTALL SOLAR PV FOR POWER INTERRUPTION. DC SEGMENT TO BE CONFIRMED BY SOLAR CONTRACTOR. INVERTER INSTALLATION TO BE COORDINATED BY SOLAR CONTRACTOR. REFER TO E301 FOR ADDITIONAL DETAILS.
2. EXISTING PANELBOARD AFFECTED BY NEW SCOPE OF WORK.
3. NEW 100A/2P DISCONNECT TO NEW ELECTRIC VEHICLE CHARGING STATION. PROVIDE 20 KVA, 480V-120/208V STEP DOWN TRANSFORMER PRIOR TO DISCONNECT SWITCH. CONTRACTOR TO FIELD VERIFY EXACT LOCATION ON SITE.

1 PARTIAL SINGLE LINE DIAGRAM

12" = 1'-0"

(E) PANEL 2CP

MOUNTING: SURFACE
ENCLOSURE: NEMA 1
FED FROM: 0/0P @
LOCATION:

SINGLE TUB
SOLID NEUTRAL
GROUND BUS

MAIN: 100 MCB
VOLTS: 120/208 Wye
PHASE: 3
WIRE: 4
SCCR: 65 kA
ISC UNKNOWN 0.00 kA

NOTES:

KEY	CKT NO.	LOAD DESCRIPTION	OCPD AMPS	P	WIRE SIZE H	N	G	VD %	A		B		C		VD %	WIRE SIZE G	N	H	P	OCPD AMPS	LOAD DESCRIPTION	CKT NO.	KEY
2	1	(E) ELECTRICAL ROOM	20	1					0	0									1	20	(E) D.D.C CONTROL	2	2
2	3	(E) ELECTRICAL ROOM	20	1							0	0							1	20	(E) STARTER CONTROL	4	2
1	5	POWER POLE RECEPT.	20	1	4	4	4	2.52					1.8	0					1	20	(E) HEATER CONTROL	6	2
2	7	(E) KILM	20	1					0	0									1	20	(E) SP #1 & SP #2	8	2
2	9	(E) KILM	20	1							0	1.2							1	20	MOTORIZED GATE OPERATOR	10	1
	11	POWER PEDESTAL	20	1									0.18	1.2					1	20	MOTORIZED GATE OPERATOR	12	1
	13	POWER PEDESTAL	20	1					0.18	0									1	20	(E) CHILLER CH-1	14	2
	15	POWER PEDESTAL	20	1							0.18	1							1	20	IRRIGATION CONTROLLER	16	1
	17	SPARE	20	1									0	0					1	20	SPARE	18	
	19	SPARE	20	1					0	0									1	20	SPARE	20	
	21	SPARE	20	1							0	0							1	20	SPARE	22	
	23	SPARE	20	1									0	0					1	20	SPARE	24	
	25	SPARE	20	1					0	0									1	20	SPARE	26	
	27	SPARE	20	1							0	0							1	20	SPARE	28	
	29	SPARE	20	1									0	0					1	20	SPARE	30	
	31	SPARE	20	1					0	0									1	20	SPARE	32	
	33	SPARE	20	1							0	0							1	20	SPARE	34	
	35	SPARE	20	1									0	0					1	20	SPARE	36	
	37	SPARE	20	1					0	0									1	20	SPARE	38	
	39	SPARE	20	1							0	0							1	20	SPARE	40	
	41	SPARE	20	1									0	0					1	20	SPARE	42	
								Total Load:	0.18 kVA		2.38 kVA		3.18 kVA										
								Total Amps:	1.50		22.65		29.32										

LOAD SUMMARY

LOAD CLASSIFICATION	CONNECTED LOAD	DEMAND FACTOR	ESTIMATED DEMAND	TOTALS*	
Power	4.740 kVA	100%	4.740 kVA		
Receptacles	1.000 kVA	100%	1.000 kVA	**TOTAL CONNECTED LOAD:**	5.74 kVA
				TOTAL ESTIMATED DEMAND LOAD:	5.740 kVA
				TOTAL CONNECTED AMPS:	15.93 A
				TOTAL ESTIMATED DEMAND AMPS:	15.9

*TOTAL DEMAND CALCS SUBTRACT ANY REDUNDANT LOAD AND THE SMALLER OF ANY NONCOINCIDENT HVAC LOADS. THIS CALC IS DONE AT EACH PANEL.

CIRCUIT KEY NOTES: 1. UTILIZE EXISTING 20A CIRCUIT BREAKER FOR NEW LOAD
2. EXISTING CIRCUIT TO REMAIN AND PROTECT IN PLACE DURING CONSTRUCTION. 3. DISCONNECT EXISTING CIRCUIT BREAKER FOR NEW...

(E) PANEL 5CP

MOUNTING: SURFACE
ENCLOSURE: NEMA 1
FED FROM: 0/0P @
LOCATION:

SINGLE TUB
SOLID NEUTRAL
GROUND BUS

MAIN: 225 MCB
VOLTS: 480/277 Wye
PHASE: 3
WIRE: 4
SCCR: 65 kA
ISC UNKNOWN 0.00 kA

NOTES:

KEY	CKT NO.	LOAD DESCRIPTION	OCPD AMPS	P	WIRE SIZE H	N	G	VD %	A		B		C		VD %	WIRE SIZE G	N	H	P	OCPD AMPS	LOAD DESCRIPTION	CKT NO.	KEY
	1								0	0												2	
2	3	(E) VFD PUMP #1	50	3							0	0							3	50	(E) VFD PUMP #2	4	
	5												0	0								6	
1	7	PARKING AREA LIGHTS	20	1	12	12	12	0.72	0.46	0.66					1.05	12	12	12	1	20	PARKING AREA LIGHTS	8	1
1	9	PARKING AREA LIGHTS	20	1	12	12	12	0.87			0.73	--							1	--	SPACE	10	
	11	SPACE	--	1									--	--					1	--	SPACE	12	
	13	SPACE	--	1					--	--									1	--	SPACE	14	
	15	SPACE	--	1							--	--							1	--	SPACE	16	
	17	SPACE	--	1									--	--					1	--	SPACE	18	
	19	SPACE	--	1					--	--									1	--	SPACE	20	
	21	SPACE	--	1							--	--							1	--	SPACE	22	
	23	SPACE	--	1									--	--					1	--	SPACE	24	
	25	SPACE	--	1					--	--									1	--	SPACE	26	
	27	SPACE	--	1							--	--							1	--	SPACE	28	
	29	SPACE	--	1									--	--					1	--	SPACE	30	
	31	SPACE	--	1					--	--									1	--	SPACE	32	
	33	SPACE	--	1							--	--							1	--	SPACE	34	
	35	SPACE	--	1									--	--					1	--	SPACE	36	
	37	SPACE	--	1					--	--									1	--	SPACE	38	
	39	SPACE	--	1							--	--							1	--	SPACE	40	
	41	SPACE	--	1									--	--					1	--	SPACE	42	
								Total Load:	1.12 kVA		0.73 kVA		0.00 kVA										
								Total Amps:	4.44		3.04		0.00										

LOAD SUMMARY

LOAD CLASSIFICATION	CONNECTED LOAD	DEMAND FACTOR	ESTIMATED DEMAND	TOTALS*	
Lighting	1.847 kVA	100%	1.847 kVA		
				TOTAL CONNECTED LOAD:	1.85 kVA
				TOTAL ESTIMATED DEMAND LOAD:	1.847 kVA
				TOTAL CONNECTED AMPS:	2.22 A
				TOTAL ESTIMATED DEMAND AMPS:	2.2

*TOTAL DEMAND CALCS SUBTRACT ANY REDUNDANT LOAD AND THE SMALLER OF ANY NONCOINCIDENT HVAC LOADS. THIS CALC IS DONE AT EACH PANEL.

CIRCUIT KEY NOTES: 1. PROVIDE NEW 20A CIRCUIT BREAKER.
2. EXISTING CIRCUIT TO REMAIN AND PROTECT IN PLACE DURING CONSTRUCTION.

LUMINAIRE SCHEDULE

TAG	DESCRIPTION	MTG	WATTS	ANSI WATTS	PER	POWER SUPPLY	VOLTAGE	MANUFACTURER - SERIES
ZN1-2	"Galeon" series, 20' pole with type 2R optics, size 16 light squares with 4 light squares, level 3 output, single head with integral occ sensor with dimming to 50% and photocell, include round straight aluminum pole, 4" diameter pole with 3 bolts with base cover single head mounting template	PL	82 / FIX	82	FIX	277	277	#GALN-SA-4C-830-U-T2R-{finish}-DIM-PR-MS/ DIM-L20 + RSA-4-T-20-N-{finish}-2-1 with base cover
ZN1-4	"Galeon" series, 20' pole with type 4FT optics, size 16 light squares with 4 light squares, level 3 output, single head with integral occ sensor with dimming to 50% and photocell, include round straight aluminum pole, 4" diameter 20' pole with 3 bolts with base cover single head mounting template	PL	82 / FIX	82	FIX	277	277	#GALN-SA-4C-830-U-T2R-{finish}-DIM-PR-MS/ DIM-L20 + RSA-4-T-20-N-{finish}-2-1 with base cover
ZN1-4C	"Galeon" series, 17.5' pole with type 4FT optics, size 16 light squares with 4 light squares, level 3 output, single head with integral occ sensor with dimming to 50% and photocell, include round straight aluminum pole, 4" diameter pole with 3 bolts with base cover single head mounting template, on 30" concrete base, custom cut pole to 17'-6"	PL	82 / FIX	82	FIX	277	277	#GALN-SA-4C-830-U-T2R-{finish}-DIM-PR-MS/ DIM-L20 + RSA-4-T-20-N-{finish}-2-1 with base cover
ZN1-4H	"Galeon" series, 17.5' pole with type 4FT optics with house side shield, size 16 light squares with 4 light squares, level 3 output, single head with integral occ sensor with dimming to 50% and photocell, include round straight aluminum pole, 4" diameter pole with 3 bolts with base cover single head mounting template, on 30" concrete base, custom cut pole to 17'-6"	PL	82 / FIX	82	FIX	277	277	#GALN-SA-4C-830-U-T2R-{finish}-DIM-PR-MS/ DIM-L20 + RSA-4-T-20-N-{finish}-2-1 with base cover
ZN2	"Galeon" series, 17.5' pole with type 4FT optics for parking lot side and T2R optics on pedestrian side, size 16 light squares with 4 light squares, level 3 output, double head at 180 degrees with integral occ sensor with dimming to 50% and photocell, include round straight aluminum pole, 4" diameter pole with 3 bolts with base cover single head mounting template, on 30" concrete base, custom cut pole to 17'-6"	PL	82 / FIX	82	FIX	277	277	#GALN-SA-4C-830-U-T4FT and T2R head-{finish}-DIM-PR-MS/DIM-L20 + RSA-4-T-17.5-N-{finish}-2-2 with base cover
ZN3-3	"Olivia medio" series, 20' event pole with 3 adjustable heads, 80 degree flood optics, 31watts per fixture head, dark skyies tilt option, include standard base cover, refer to detail sheet for diagram of aiming and for locations of heads on the pole, include occ sensor and photocell	PL	31 / FIX	31	FIX	277	277	OLML-F80-X{refer to details}-2G700-30-{finish}-UNV-DS-DM
ZN3-4	"Olivia medio" series, 20' event pole with 4 adjustable heads, 80 degree flood optics, 31watts per fixture head, dark skyies tilt option, include standard base cover, refer to detail sheet for diagram of aiming and for locations of heads on the pole, include occ sensor and photocell	PL	31 / FIX	31	FIX	277	277	OLML-F80-X{refer to details}-2G700-30-{finish}-UNV-DS-DM
ZN3-5	"Olivia medio" series, 20' event pole with 5 adjustable heads, 80 degree flood optics, 31watts per fixture head, dark skyies tilt option, include standard base cover, refer to detail sheet for diagram of aiming and for locations of heads on the pole, include occ sensor and photocell	PL	31 / FIX	31	FIX	277	277	OLML-F80-X{refer to details}-2G700-30-{finish}-UNV-DS-DM

LIGHTING SEQUENCE OF OPERATION

NOTES:
1. {LI##} DENOTES THE LIGHTING SEQUENCE OF OPERATIONS FOR THIS SPACE.
2. [#B] PUSH BUTTON REFERS TO SCENE QUANTITY. CONTROL STATION SHALL BE CAPABLE OF [RAISE/LOWER AND] SWITCHING ON/OFF FOR MULTIPLE SCENES AS INDICATED ON SHEETS AND THE LIGHTING SEQUENCE OF OPERATIONS {L##}. COORDINATE QUANTITIES OF BUTTONS FOR CONTROL STATIONS WITH LIGHTING CONTROL MANUFACTURER.
3. {ZM} DENOTES LIGHTING CONTROL ZONE. PROVIDE SEPARATE CONTROL OF EACH CONTROLLED ZONE. LUMINAIRES ASSOCIATED WITH THE SAME ZONE SHALL OPERATE TOGETHER WITHIN THE SAME PROGRAMMED SCENE.
4. a = SWITCH DESIGNATION FOR LIGHTING CONTROL
5. VERIFY AND COORDINATE ALL TIME CLOCK SETTINGS WITH OWNER PRIOR TO FINAL PROGRAMMING.
6. VERIFY AND COORDINATE ALL PUSH BUTTON WALL DEVICES AND QUANTITIES OF INDIVIDUAL BUTTONS WITH SCENES AND ZONES PER LOCATION.
7. VERIFY AND COORDINATE ALL PUSH BUTTON QUANTITIES AND SCENE NAMES WITH OWNER PRIOR TO SUBMITTING ENGRAVING TEMPLATE TO MANUFACTURER.

PLAN ID	LIGHTING SWITCHED
{LS1}	LIGHTING OPERATION: SEQUENCE(LS1): MOTION SENSORS, AND PHOTOCELLS BUILT-IN CONTROL PROVIDED IN THIS SPACE. ON: LIGHT TURN ON BY MOTION SENSORS, OR PHOTOCELLS. ADJUST: AUTOMATIC SCHEDULING CONTROL SHALL BE CAPABLE OF REDUCING OUTDOOR LIGHTING POWER BY AT LEAST 50% AND MORE THAN 90%, AND SEPERATELY CAPABLE OF TURN THE LIGHT OFF, DURING SCHEDULE UNOCCUPIED PERIODS. OFF: LIGHT TURN OFF BY MOTION SENSORS, OR PHOTOCELLS.

LPA
ARCHITECTURE ENGINEERING INTERIOR DESIGN
LANDSCAPE ARCHITECTURE PLANNING
949-261-1001 Office
LPADesignStudios.com
5301 California Avenue, Suite 100
Irvine, California 92617

REGISTERED PROFESSIONAL ENGINEER
NESTOR C. IGNACIO JR.
Lic. E16934
Exp. 6-30-2027
ELECTRICAL
STATE OF CALIFORNIA

IMEG
www.imegcorp.com
300 NORTH LAKE AVENUE
12TH FLOOR
PASADENA, CA 91101
P: 626.463.2800 F: 626.463.2801
PROJECT #25007252.00

This document and all other project documents, ideas, aesthetics and designs incorporated therein are instruments of service. All project documents are copyright protected, are the property of LPA, Inc. (LPA) and cannot be lawfully used in whole or in part for any project or purpose except as set forth in the contractual agreement between LPA and its Client. The unauthorized disclosure and/or use of the project documents (including the creation of derivative works), may give rise to liability for copyright infringement, unlawful disclosure, use or misappropriation of property rights held by LPA. The unauthorized use of the project documents will give rise to the recovery of monetary losses and damages including attorney fees and costs for which the unauthorized user will be held liable.
Project documents describe the design intent of the work and are not a representation of as-built or existing conditions. LPA is not responsible for any discrepancies between the project documents and the existing conditions.

© LPA, Inc.

ALTADENA ELEMENTARY SCHOOL

743 E Calaveras St,
Altadena, CA 91001

ALTADENA ELEMENTARY SCHOOL

Revision	Date
Addendum 1	04/17/2026

Submittal	Date
100% SCHEMATIC DESIGN	12/05/2025
DSA SUBMITTAL	02/02/2026
DSA SUBMITTAL V2	03/13/2026

33366
Checker
12" = 1'-0"

E300

ELECTRICAL DIAGRAMS & SCHEDULES

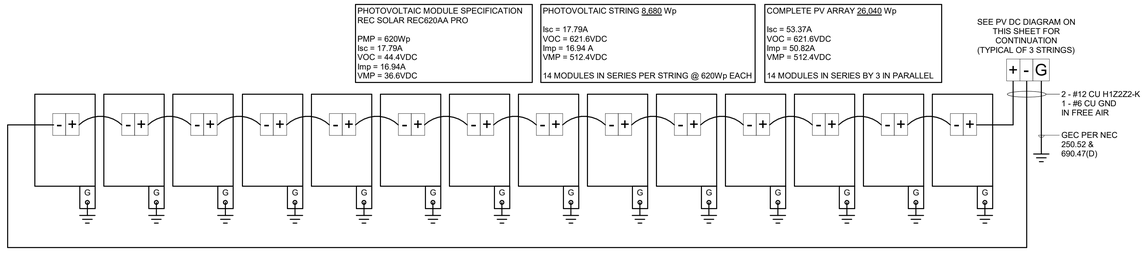

1 ARRAY WIRING DIAGRAM

NO SCALE

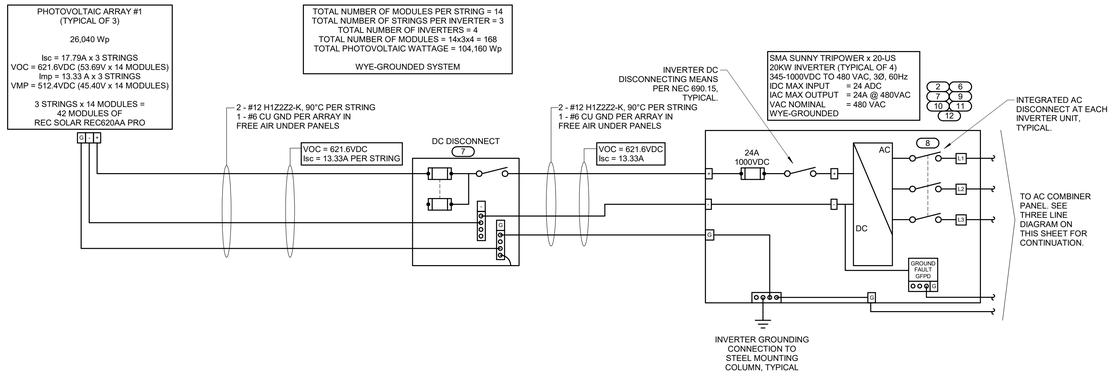

2 ELECTRICAL THREE LINE DC DIAGRAM

NO SCALE

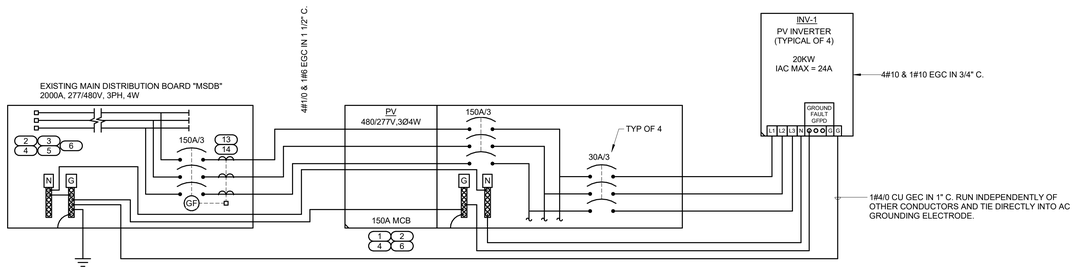

3 ELECTRICAL THREE LINE AC DIAGRAM

NO SCALE

PANEL PV

MOUNTING: SURFACE
ENCLOSURE: NEMA 3R
FED FROM: 150/3P @ MSDB
LOCATION:

SINGLE TUB
SOLID NEUTRAL
GROUND BUS

MAIN: 150 MCB
VOLTS: 480/277 Wye
PHASE: 3
WIRE: 4
SCCR: 65 kA
ISC UNKNOWN 0.00 kA

NOTES:

KEY	CKT NO.	LOAD DESCRIPTION	OCPD AMPS	P	WIRE SIZE H	N	G	VD %	A	B	C	VD %	WIRE SIZE G	N	H	OCPD P	AMPS	LOAD DESCRIPTION	CKT NO.	KEY
	1								0	0									2	
	3	INV-1	30	3	10	10	10	1.25		0	0	0.88	10	10	10	3	30	INV-2	4	
	5										0	0							6	
	7								0	0									8	
	9	INV-3	30	3	10	10	10	0.6		0	0	0.27	10	10	10	3	30	INV-4	10	
	11										0	0							12	
	13																		14	
	15																		16	
	17																		18	
	19																		20	
	21																		22	
	23																		24	
								Total Load:	0.00 kVA	0.00 kVA	0.00 kVA									
								Total Amps:	0.00	0.00	0.00									

LOAD SUMMARY

LOAD CLASSIFICATION	CONNECTED LOAD	DEMAND FACTOR	ESTIMATED DEMAND	TOTALS*	
Power	0.000 kVA	0%	0.000 kVA		
				TOTAL CONNECTED LOAD:	0.00 kVA
				TOTAL ESTIMATED DEMAND LOAD:	0.000 kVA
				TOTAL CONNECTED AMPS:	0.00 A
				TOTAL ESTIMATED DEMAND AMPS:	0

*TOTAL DEMAND CALCS SUBTRACT ANY REDUNDANT LOAD AND THE SMALLER OF ANY NONCOINCIDENT HVAC LOADS. THIS CALC IS DONE AT EACH PANEL.

CIRCUIT KEY NOTES:

KEYNOTES:

1. PROVIDE LABEL ON PV-AC PANELS "DEDICATED PV SYSTEM AC COLLECTION PANEL. ADDITION OF NEW CIRCUITS IS PROHIBITED".
2. PROVIDE WARNING SIGN PER CEC 690.17 READING "WARNING - ELECTRICAL SHOCK HAZARD - DO NOT TOUCH TERMINALS - TERMINALS ON THE LINE AND LOAD SIDES MAY BE ENERGIZED IN THE OPEN POSITION".
3. PV SYSTEM DISCONNECT PER CEC 690.13.
4. LABEL OVERCURRENT DEVICE "PHOTOVOLTAIC ELECTRIC POWER SOURCE" PER CEC 705.10, AND "DEVICES ARE BACKFEED" PER CEC 690.64(B)(5). LABEL WITH MAXIMUM AC OUTPUT OPERATING CURRENT AND THE OPERATING VOLTAGE PER 690.54. OVERCURRENT DEVICES SHALL BE BACK FEED RATED.
5. LABEL "WARNING - THIS EQUIPMENT FED BY MULTIPLE SOURCES. TOTAL RATING OF ALL OVERCURRENT DEVICES, EXCLUDING MAIN SUPPLY OVERCURRENT DEVICE, SHALL NOT EXCEED AMPACITY OF BUS BAR."
6. LABEL "PHOTOVOLTAIC SYSTEM DISCONNECT SWITCH". SWITCH TO BE ACCESSIBLE AND CONFORM TO CEC 705.22.
7. LABEL "DO NOT OPEN FUSES UNDER LOAD".
8. PV SYSTEM DISCONNECT PER CEC 690.13.
9. LISTING AGENCY NAMES AND NUMBERS TO BE INDICATED ON POWER INVERTER AND SOLAR MODULES PER CEC 110.3(B).
10. LABEL "PHOTOVOLTAIC ARRAY DC DISCONNECT DEVICE" PER CEC 690.14(C)(2). LABEL WITH OPERATING CURRENT, OPERATING VOLTAGE, MAXIMUM SYSTEM VOLTAGE, AND SHORT CIRCUIT CURRENT PER CEC 690.53. SWITCH TO BE LOCKED PER CEC 690.7(D).
11. USE FERRAZ SHAWMUT MERSEN 1500VDC PHOTOVOLTAIC FUSES OR APPROVED EQUAL.
12. LABEL "CAUTION OPEN PHOTOVOLTAIC ARRAY DC DISCONNECT PRIOR TO OPENING/CLOSING ANY FUSE BLOCK".
13. LABEL "WARNING, INVERTER OUTPUT CONNECTION. DO NOT RELOCATE THIS OVERCURRENT DEVICE". LOCATE BREAKER AT OPPOSITE END OF LUGS PER CEC 690.64(B)(7).
14. BREAKER WITH GROUND FAULT PROTECTION HAS BEEN IDENTIFIED AND LISTED AS SUITABLE FOR BACKFEED PER CEC 690.64(B)(5).

LPA
ARCHITECTURE ENGINEERING INTERIOR DESIGN LANDSCAPE ARCHITECTURE PLANNING
949-261-1001 Office
LPADesignStudios.com
5301 California Avenue, Suite 100
Irvine, California 92617

REGISTERED PROFESSIONAL ENGINEER
NESTOR C. IGNACIO
Lic. E16934
Exp. 6-30-2027
ELECTRICAL
STATE OF CALIFORNIA

IMEG
www.imegcorp.com
300 NORTH LAKE AVENUE
12TH FLOOR
PASADENA, CA 91101
P: 626.463.2800 F: 626.463.2801
PROJECT #25007252.00

This document and all other project documents, ideas, aesthetics and designs incorporated therein are instruments of service. All project documents are copyright protected, are the property of LPA, Inc. (LPA) and cannot be lawfully used in whole or in part for any project or purpose except as set forth in the contractual agreement between LPA and its Client. The unauthorized disclosure and/or use of the project documents (including the creation of derivative works), may give rise to liability for copyright infringement, unlawful disclosure, use or misappropriation of property rights held by LPA. The unauthorized use of the project documents will give rise to the recovery of monetary losses and damages including attorney fees and costs for which the unauthorized user will be held liable.
Project documents describe the design intent of the work and are not a representation of as-built or existing conditions. LPA is not responsible for any discrepancies between the project documents and the existing conditions.

© LPA, Inc.

ALTADENA ELEMENTARY SCHOOL

743 E Calaveras St,
Altadena, CA 91001

ALTADENA ELEMENTARY SCHOOL

Revision	Date
Addendum 1	04/17/2026

Submittal	Date
100% SCHEMATIC DESIGN	12/05/2025
DSA SUBMITTAL	02/02/2026
DSA SUBMITTAL V2	03/13/2026

33366
Checker
12" = 1'-0"

E301

PV SYSTEM DIAGRAMS

SECTION 26 05 00 - BASIC ELECTRICAL REQUIREMENTS

PART 1 - GENERAL

1.01 SECTION INCLUDES

A. REQUIREMENTS APPLICABLE TO ALL DIVISION 26 SECTIONS. ALSO REFER TO DIVISION 1 - GENERAL REQUIREMENTS.

B. ALL MATERIALS AND INSTALLATION METHODS SHALL CONFORM TO THE APPLICABLE STANDARDS, GUIDELINES AND CODES REFERENCED HEREIN AND WITHIN EACH SPECIFICATION SECTION.

1.02 REFERENCES

A. NFPA 70 - NATIONAL ELECTRICAL CODE (NEC)

B. CEC CALIFORNIA ELECTRICAL CODE

C. CCR CALIFORNIA CODE OF REGULATION

D. CBC CALIFORNIA BUILDING CODE

E. CFC CALIFORNIA FIRE CODE

F. CALIFORNIA TITLE 24 - BUILDING ENERGY EFFICIENCY STANDARDS

1.03 SCOPE OF WORK

A. THIS SPECIFICATION AND THE ASSOCIATED DRAWINGS GOVERN FURNISHING, INSTALLING, TESTING AND PLACING INTO SATISFACTORY OPERATION THE ELECTRICAL SYSTEMS.

B. THE CONTRACTOR SHALL FURNISH AND INSTALL ALL NEW MATERIALS AS INDICATED ON THE DRAWINGS, AND/OR IN THESE SPECIFICATIONS, AND ALL ITEMS REQUIRED TO MAKE THE PORTION OF THE ELECTRICAL WORK A FINISHED AND WORKING SYSTEM.

C. SEPARATE CONTRACTS WILL BE AWARDED FOR THE FOLLOWING WORK.

D. DESCRIPTION OF SYSTEMS SHALL BE AS FOLLOWS:

1. ELECTRICAL POWER SYSTEM TO EV CHARGER STATION.
2. GROUNDING SYSTEM.
3. FURNISH AND INSTALL FIRESTOPPING SYSTEMS FOR PENETRATIONS OF FIRE-RATED CONSTRUCTION ASSOCIATED WITH THIS CONTRACTOR'S WORK.

E. WORK NOT INCLUDED:

1. TELECOMMUNICATIONS CABLING WILL BE BY DIVISION 27, IN RACEWAYS AND CONDUITS FURNISHED AND INSTALLED AS PART OF THE ELECTRICAL WORK.

1.04 OWNER FURNISHED PRODUCTS

A. THE OWNER WILL SUPPLY THE FOLLOWING ITEMS FOR INSTALLATION AND/OR CONNECTION BY THIS CONTRACTOR:

B. THE OWNER WILL SUPPLY MANUFACTURER'S INSTALLATION DATA FOR OWNER-PURCHASED EQUIPMENT FOR THIS PROJECT.

C. THIS CONTRACTOR SHALL MAKE ALL ELECTRICAL SYSTEM CONNECTIONS SHOWN ON THE DRAWINGS OR REQUIRED FOR FULLY FUNCTIONAL UNITS.

D. THIS CONTRACTOR IS RESPONSIBLE FOR ALL DAMAGE TO OWNER FURNISHED EQUIPMENT CAUSED DURING INSTALLATION.

1.05 WORK SEQUENCE

A. ALL WORK THAT WILL PRODUCE EXCESSIVE NOISE OR INTERFERENCE WITH NORMAL BUILDING OPERATIONS, AS DETERMINED BY THE OWNER, SHALL BE SCHEDULED WITH THE OWNER. IT MAY BE NECESSARY TO SCHEDULE SUCH WORK DURING UNOCCUPIED HOURS. THE OWNER RESERVES THE RIGHT TO DETERMINE WHEN RESTRICTED CONSTRUCTION HOURS ARE REQUIRED.

B. ITEMIZE ALL WORK AND LIST ASSOCIATED HOURS AND PAY SCALE FOR EACH ITEM.

1.06 COORDINATION DRAWINGS

A. DEFINITIONS:

1. COORDINATION DRAWINGS: A COMPILATION OF THE PERTINENT LAYOUT AND SYSTEM DRAWINGS THAT SHOW THE SIZES AND LOCATIONS, INCLUDING ELEVATIONS, OF SYSTEM COMPONENTS AND REQUIRED ACCESS AREAS TO ENSURE THAT NO TWO OBJECTS WILL OCCUPY THE SAME SPACE.
   a. ELECTRICAL TRADES SHALL INCLUDE, BUT ARE NOT LIMITED TO, ELECTRICAL EQUIPMENT, CONDUIT 1.5" AND LARGER, CONDUIT RACKS, CABLE TRAYS, PULL BOXES, TRANSFORMERS, RACEWAY, BUSWAY, LIGHTING, CEILING-MOUNTED DEVICES, AND ANY ITEM THAT MAY IMPACT COORDINATION WITH OTHER DISCIPLINES.
   b. MAINTENANCE CLEARANCES AND CODE-REQUIRED DEDICATED SPACE SHALL BE INCLUDED.

B. PARTICIPATION:

1. THE CONTRACTORS AND SUBCONTRACTORS RESPONSIBLE FOR WORK DEFINED ABOVE SHALL PARTICIPATE IN THE COORDINATION DRAWING PROCESS.
2. ONE CONTRACTOR SHALL BE DESIGNATED AS THE COORDINATING CONTRACTOR FOR PURPOSES OF PREPARING A COMPLETE SET OF COMPOSITE ELECTRONIC CAD COORDINATION DRAWINGS THAT INCLUDE ALL APPLICABLE TRADES, AND FOR COORDINATING THE ACTIVITIES RELATED TO THIS PROCESS. THE COORDINATING CONTRACTOR FOR THIS PROJECT SHALL BE:
   a. THE COORDINATING CONTRACTOR SHALL UTILIZE PERSONNEL FAMILIAR WITH REQUIREMENTS OF THIS PROJECT AND SKILLED AS DRAFTSPERSONS/CAD OPERATORS, COMPETENT TO PREPARE THE REQUIRED COORDINATION DRAWINGS.
3. ELECTRONIC CAD DRAWINGS SHALL BE SUBMITTED TO THE COORDINATING CONTRACTOR FOR ADDITION OF WORK BY OTHER TRADES. IMEG WILL PROVIDE ELECTRONIC FILE COPIES OF VENTILATION DRAWINGS FOR CONTRACTOR'S USE IF THE CONTRACTOR SIGNS AND RETURNS AN "ELECTRONIC FILE TRANSFER" WAIVER PROVIDED BY IMEG. IMEG WILL NOT CONSIDER BLATANT REPRODUCTIONS OF ORIGINAL FILE COPIES AN ACCEPTABLE ALTERNATIVE FOR COORDINATION DRAWINGS.

C. DRAWING REQUIREMENTS:

1. THE FILE FORMAT AND FILE NAMING CONVENTION SHALL BE COORDINATED WITH AND AGREED TO BY ALL CONTRACTORS PARTICIPATING IN THE COORDINATION PROCESS AND THE OWNER.
   a. SCALE OF DRAWINGS:
      1) GENERAL PLANS: 1/4 INCH = 1'-0" (MINIMUM).
      2) MECHANICAL, ELECTRICAL, COMMUNICATION ROOMS, AND INCLUDING THE SURROUNDING AREAS WITHIN 10 FEET: 1/2 INCH = 1'-0" (MINIMUM).
      3) SHAFTS AND RISERS: 1/2 INCH = 1'-0" (MINIMUM).
      4) SECTIONS OF SHAFTS AND MECHANICAL AND ELECTRICAL EQUIPMENT ROOMS: 1/4 INCH = 1'-0" (MINIMUM).
      5) SECTIONS OF CONGESTED AREAS: 1/2 INCH = 1'-0" (MINIMUM).
2. DUCTWORK LAYOUT DRAWINGS SHALL BE THE BASELINE SYSTEM FOR OTHER COMPONENTS. DUCTWORK LAYOUT DRAWINGS SHALL BE MODIFIED TO ACCOMMODATE OTHER COMPONENTS AS THE COORDINATION PROCESS PROGRESSES.
3. THERE MAY BE MORE DRAWINGS REQUIRED FOR RISERS, TOP AND BOTTOM LEVELS OF MECHANICAL ROOMS, AND SHAFTS.
4. THE MINIMUM QUANTITY OF DRAWINGS WILL BE ESTABLISHED AT THE FIRST COORDINATION MEETING AND SENT TO THE ARCHITECT/ENGINEER FOR REVIEW. ADDITIONAL DRAWINGS MAY BE REQUIRED IF OTHER AREAS OF CONGESTION ARE DISCOVERED DURING THE COORDINATION PROCESS.

D. GENERAL:

1. A PLOTTED SET OF COORDINATION DRAWINGS SHALL BE AVAILABLE AT THE PROJECT SITE.
2. COORDINATION DRAWINGS ARE NOT SHOP DRAWINGS AND SHALL NOT BE SUBMITTED AS SUCH.
3. THE CONTRACT DRAWINGS ARE SCHEMATIC IN NATURE AND DO NOT SHOW EVERY FITTING AND APPURTENANCE FOR EACH UTILITY. EACH CONTRACTOR IS EXPECTED TO HAVE INCLUDED IN THE BID SUFFICIENT FITTINGS, MATERIAL, AND LABOR TO ALLOW FOR ADJUSTMENTS IN ROUTING OF UTILITIES MADE NECESSARY BY THE COORDINATION PROCESS AND TO PROVIDE A COMPLETE AND FUNCTIONAL SYSTEM.
4. THE CONTRACTORS WILL NOT BE ALLOWED ADDITIONAL COSTS OR TIME EXTENSIONS DUE TO PARTICIPATION IN THE COORDINATION PROCESS.
5. THE CONTRACTORS WILL NOT BE ALLOWED ADDITIONAL COSTS OR TIME EXTENSIONS FOR ADDITIONAL FITTINGS, REROUTINGS OR CHANGES OF DUCT SIZE, THAT ARE ESSENTIALLY EQUIVALENT SIZES TO THOSE SHOWN ON THE DRAWINGS AND DETERMINED NECESSARY THROUGH THE COORDINATION PROCESS.
6. ENGINEER RESERVES THE RIGHT TO DETERMINE SPACE PRIORITY OF EQUIPMENT IN THE EVENT OF SPATIAL CONFLICTS OR INTERFERENCE BETWEEN EQUIPMENT, PIPING, CONDUIT, DUCTS, AND EQUIPMENT PROVIDED BY THE TRADES.
7. CHANGES TO THE CONTRACT DOCUMENTS THAT ARE NECESSARY FOR SYSTEMS INSTALLATION AND COORDINATION SHALL BE BROUGHT TO THE ATTENTION OF THE ENGINEER.
8. ACCESS PANELS SHALL PREFERABLY OCCUR ONLY IN GYPSUM BOARD WALLS OR PLASTER CEILINGS WHERE INDICATED ON THE DRAWINGS.
   a. ACCESS TO MECHANICAL, ELECTRICAL, TECHNOLOGY, AND OTHER ITEMS LOCATED ABOVE THE CEILING SHALL BE THROUGH ACCESSIBLE LAY-IN CEILING TILE AREAS.
   b. POTENTIAL LAYOUT CHANGES SHALL BE MADE TO AVOID ADDITIONAL ACCESS PANELS.
   c. ADDITIONAL ACCESS PANELS SHALL NOT BE ALLOWED WITHOUT WRITTEN APPROVAL FROM THE ENGINEER AT THE COORDINATION DRAWING STAGE.
   d. PROVIDING ADDITIONAL ACCESS PANELS SHALL BE CONSIDERED AFTER OTHER ALTERNATIVES ARE REVIEWED AND DISCARDED BY THE ENGINEER AND THE OWNER'S REPRESENTATIVE.
   e. WHEN ADDITIONAL ACCESS PANELS ARE REQUIRED, THEY SHALL BE PROVIDED WITHOUT ADDITIONAL COST TO THE OWNER.
9. COMPLETE THE COORDINATION DRAWING PROCESS AND OBTAIN SIGN-OFF OF THE DRAWINGS BY ALL CONTRACTORS PRIOR TO INSTALLING ANY OF THE COMPONENTS.
10. CONFLICTS THAT RESULT AFTER THE COORDINATION DRAWINGS ARE SIGNED OFF SHALL BE THE RESPONSIBILITY OF THE CONTRACTOR OR SUBCONTRACTOR WHO DID NOT PROPERLY IDENTIFY THEIR WORK REQUIREMENTS, OR INSTALLED THEIR WORK WITHOUT PROPER COORDINATION.
11. UPDATED COORDINATION DRAWINGS THAT REFLECT AS-BUILT CONDITIONS MAY BE USED AS RECORD DOCUMENTS.

1.07 QUALITY ASSURANCE

A. CONTRACTOR'S RESPONSIBILITY PRIOR TO SUBMITTING PRICING/BID DATA:

1. THE CONTRACTOR IS RESPONSIBLE FOR CONSTRUCTING COMPLETE AND OPERATING SYSTEMS. THE CONTRACTOR ACKNOWLEDGES AND UNDERSTANDS THAT THE CONTRACT DOCUMENTS ARE A TWO-DIMENSIONAL REPRESENTATION OF A THREE-DIMENSIONAL OBJECT, SUBJECT TO HUMAN INTERPRETATION. THIS REPRESENTATION MAY INCLUDE IMPERFECT DATA, INTERPRETED CODES, UTILITY GUIDES, THREE-DIMENSIONAL CONFLICTS, AND REQUIRED FIELD COORDINATION ITEMS. SUCH DEFICIENCIES CAN BE CORRECTED WHEN IDENTIFIED PRIOR TO ORDERING MATERIAL AND STARTING INSTALLATION. THE CONTRACTOR AGREES TO CAREFULLY STUDY AND COMPARE THE INDIVIDUAL CONTRACT DOCUMENTS AND REPORT AT ONCE IN WRITING TO THE ARCHITECT/ENGINEER ANY DEFICIENCIES THE CONTRACTOR MAY DISCOVER. THE CONTRACTOR FURTHER AGREES TO REQUIRE EACH SUBCONTRACTOR TO LIKEWISE STUDY THE DOCUMENTS AND REPORT AT ONCE ANY DEFICIENCIES DISCOVERED.
2. THE CONTRACTOR SHALL RESOLVE ALL REPORTED DEFICIENCIES WITH THE ENGINEER PRIOR TO AWARDING ANY SUBCONTRACTS, ORDERING MATERIAL, OR STARTING ANY WORK WITH THE CONTRACTOR'S OWN EMPLOYEES. ANY WORK PERFORMED PRIOR TO RECEIPT OF INSTRUCTIONS FROM THE ENGINEER WILL BE DONE AT THE CONTRACTOR'S RISK.

B. QUALIFICATIONS:

1. ONLY PRODUCTS OF REPUTABLE MANUFACTURERS AS DETERMINED BY THE ENGINEER ARE ACCEPTABLE.
2. ALL CONTRACTORS AND SUBCONTRACTORS SHALL EMPLOY ONLY WORKMEN WHO ARE SKILLED IN THEIR TRADES. AT ALL TIMES, THE NUMBER OF APPRENTICES AT THE JOB SITE SHALL BE LESS THAN OR EQUAL TO THE NUMBER OF JOURNEYMEN AT THE JOB SITE.

C. COMPLIANCE WITH CODES, LAWS, ORDINANCES:

1. CONFORM TO ALL REQUIREMENTS OF THE CITY OF RIVERSIDE CODES, LAWS, ORDINANCES AND OTHER REGULATIONS HAVING JURISDICTION.
2. IF THERE IS A DISCREPANCY BETWEEN THE CODES AND REGULATIONS AND THESE SPECIFICATIONS, THE ENGINEER SHALL DETERMINE THE METHOD OR EQUIPMENT USED.
3. IF THE CONTRACTOR NOTES, AT THE TIME OF BIDDING, THAT ANY PARTS OF THE DRAWINGS OR SPECIFICATIONS DO NOT COMPLY WITH THE CODES OR REGULATIONS, CONTRACTOR SHALL INFORM THE ENGINEER IN WRITING, REQUESTING A CLARIFICATION. IF THERE IS INSUFFICIENT TIME FOR THIS PROCEDURE, CONTRACTOR SHALL SUBMIT WITH THE PROPOSAL A SEPARATE PRICE TO MAKE THE SYSTEM COMPLY WITH THE CODES AND REGULATIONS.
4. ALL CHANGES TO THE SYSTEM MADE AFTER THE LETTING OF THE CONTRACT TO COMPLY WITH CODES OR THE REQUIREMENTS OF THE INSPECTOR, SHALL BE MADE BY THE CONTRACTOR WITHOUT COST TO THE OWNER.
5. IF THERE IS A DISCREPANCY BETWEEN MANUFACTURER'S RECOMMENDATIONS AND THESE SPECIFICATIONS, THE MANUFACTURER'S RECOMMENDATIONS SHALL GOVERN.
6. IF THERE ARE NO LOCAL CODES HAVING JURISDICTION, THE CURRENT ISSUE OF THE NATIONAL ELECTRICAL CODE SHALL BE FOLLOWED.

D. PERMITS, FEES, TAXES, INSPECTIONS:

1. PROCURE ALL APPLICABLE PERMITS AND LICENSES.
2. ABIDE BY ALL LAWS, REGULATIONS, ORDINANCES, AND OTHER RULES OF THE STATE OR POLITICAL SUBDIVISION WHERE THE WORK IS DONE, OR AS REQUIRED BY ANY DULY CONSTITUTED PUBLIC AUTHORITY.
3. PAY ALL CHARGES FOR PERMITS OR LICENSES.
4. PAY ALL FEES AND TAXES IMPOSED BY STATE, MUNICIPAL, AND OTHER REGULATORY BODIES.
5. PAY ALL CHARGES ARISING OUT OF REQUIRED INSPECTIONS BY AN AUTHORIZED BODY.
6. PAY ALL CHARGES ARISING OUT OF REQUIRED CONTRACT DOCUMENT REVIEWS ASSOCIATED WITH THE PROJECT AND AS INITIATED BY THE OWNER OR AUTHORIZED AGENCY/CONSULTANT.
7. WHERE APPLICABLE, ALL FIXTURES, EQUIPMENT AND MATERIALS SHALL BE LISTED BY UNDERWRITER'S LABORATORIES, INC. OR A NATIONALLY RECOGNIZED TESTING ORGANIZATION.
8. PAY ALL TELEPHONE COMPANY CHARGES RELATED TO THE SERVICE OR CHANGE IN SERVICE.

E. EXAMINATION OF DRAWINGS:

1. THE DRAWINGS FOR THE ELECTRICAL WORK ARE COMPLETELY DIAGRAMMATIC, INTENDED TO CONVEY THE SCOPE OF THE WORK AND TO INDICATE THE GENERAL ARRANGEMENTS AND LOCATIONS OF EQUIPMENT, OUTLETS, ETC., AND THE APPROXIMATE SIZES OF EQUIPMENT.
2. CONTRACTOR SHALL DETERMINE THE EXACT LOCATIONS OF EQUIPMENT AND ROUGH-INS, AND THE EXACT ROUTING OF RACEWAYS TO BEST FIT THE LAYOUT OF THE JOB. CONDUIT ENTRY POINTS FOR ELECTRICAL EQUIPMENT INCLUDING, BUT NOT LIMITED TO, PANELBOARDS, SWITCHBOARDS, SWITCHGEAR AND UNIT SUBSTATIONS, SHALL BE DETERMINED BY THE CONTRACTOR UNLESS NOTED IN THE CONTRACT DOCUMENTS.
3. SCALING OF THE DRAWINGS WILL NOT BE SUFFICIENT OR ACCURATE FOR DETERMINING THESE LOCATIONS.
4. WHERE JOB CONDITIONS REQUIRE REASONABLE CHANGES IN ARRANGEMENTS AND LOCATIONS, SUCH CHANGES SHALL BE MADE BY THE CONTRACTOR AT NO ADDITIONAL COST TO THE OWNER.
5. BECAUSE OF THE SCALE OF THE DRAWINGS, CERTAIN BASIC ITEMS, SUCH AS JUNCTION BOXES, PULL BOXES, CONDUIT FITTINGS, ETC., MAY NOT BE SHOWN, BUT WHERE REQUIRED BY OTHER SECTIONS OF THE SPECIFICATIONS OR REQUIRED FOR PROPER INSTALLATION OF THE WORK, SUCH ITEMS SHALL BE FURNISHED AND INSTALLED.
6. IF AN ITEM IS EITHER SHOWN ON THE DRAWINGS OR CALLED FOR IN THE SPECIFICATIONS, IT SHALL BE INCLUDED IN THE CONTRACT.
7. THE CONTRACTOR SHALL DETERMINE QUANTITIES AND QUALITY OF MATERIAL AND EQUIPMENT REQUIRED FROM THE DOCUMENTS. WHERE DISCREPANCIES ARISE BETWEEN DRAWINGS, SCHEDULES AND/OR SPECIFICATIONS, THE GREATER AND BETTER-QUALITY NUMBER SHALL GOVERN.
8. WHERE USED IN ELECTRICAL DOCUMENTS THE WORD "FURNISH" SHALL MEAN SUPPLY FOR USE, THE WORD "INSTALL" SHALL MEAN CONNECT UP COMPLETE AND READY FOR OPERATION, AND THE WORD "PROVIDE" SHALL MEAN TO SUPPLY FOR USE AND CONNECT UP COMPLETE AND READY FOR OPERATION.
9. ANY ITEM LISTED AS FURNISHED SHALL ALSO BE INSTALLED UNLESS OTHERWISE NOTED.
10. ANY ITEM LISTED AS INSTALLED SHALL ALSO BE FURNISHED UNLESS OTHERWISE NOTED.

F. ELECTRONIC MEDIA/FILES:

1. CONSTRUCTION DRAWINGS FOR THIS PROJECT HAVE BEEN PREPARED UTILIZING REVIT.
2. CONTRACTORS AND SUBCONTRACTORS MAY REQUEST ELECTRONIC MEDIA FILES OF THE CONTRACT DRAWINGS AND/OR COPIES OF THE SPECIFICATIONS. SPECIFICATIONS WILL BE PROVIDED IN PDF FORMAT.
3. UPON REQUEST FOR ELECTRONIC MEDIA, THE CONTRACTOR SHALL COMPLETE AND RETURN A SIGNED "ELECTRONIC FILE TRANSMITTAL" FORM PROVIDED BY IMEG.
4. IF THE INFORMATION REQUESTED INCLUDES FLOOR PLANS PREPARED BY OTHERS, THE CONTRACTOR WILL BE RESPONSIBLE FOR OBTAINING APPROVAL FROM THE APPROPRIATE DESIGN PROFESSIONAL FOR USE OF THAT PART OF THE DOCUMENT.
5. THE ELECTRONIC CONTRACT DOCUMENTS CAN BE USED FOR PREPARATION OF SHOP DRAWINGS AND AS-BUILT DRAWINGS ONLY. THE INFORMATION MAY NOT BE USED IN WHOLE OR IN PART FOR ANY OTHER PROJECT.
6. THE DRAWINGS PREPARED BY IMEG FOR BIDDING PURPOSES MAY NOT BE USED DIRECTLY FOR DUCTWORK LAYOUT DRAWINGS OR COORDINATION DRAWINGS.
7. THE USE OF THESE CAD DOCUMENTS BY THE CONTRACTOR DOES NOT RELIEVE THEM FROM THEIR RESPONSIBILITY FOR COORDINATION OF WORK WITH OTHER TRADES AND VERIFICATION OF SPACE AVAILABLE FOR THE INSTALLATION.
8. THE INFORMATION IS PROVIDED TO EXPEDITE THE PROJECT AND ASSIST THE CONTRACTOR WITH NO GUARANTEE BY IMEG AS TO THE ACCURACY OR CORRECTNESS OF THE INFORMATION PROVIDED. IMEG ACCEPTS NO RESPONSIBILITY OR LIABILITY FOR THE CONTRACTOR'S USE OF THESE DOCUMENTS.

G. FIELD MEASUREMENTS:

1. VERIFY ALL PERTINENT DIMENSIONS AT THE JOB SITE BEFORE ORDERING ANY CONDUIT, CONDUCTORS, WIREWAYS, BUS DUCT, FITTINGS, ETC.

1.08 WEB-BASED PROJECT SOFTWARE

A. THE GENERAL CONTRACTOR SHALL PROVIDE A WEB-BASED PROJECT SOFTWARE SITE FOR THE PURPOSE OF HOSTING AND MANAGING PROJECT COMMUNICATION AND DOCUMENTATION UNTIL COMPLETION OF THE WARRANTY PHASE.

B. THE WEB-BASED PROJECT SOFTWARE SHALL INCLUDE, AT A MINIMUM, THE FOLLOWING FEATURES: CONSTRUCTION SCHEDULE, SUBMITTALS, RFIS, ASIS, CONSTRUCTION CHANGE DIRECTIVES, CHANGE ORDERS, DRAWING MANAGEMENT, SPECIFICATION MANAGEMENT, PAYMENT APPLICATIONS, CONTRACT MODIFICATIONS, MEETING MINUTES, CONSTRUCTION PROGRESS PHOTOS.

C. PROVIDE WEB-BASED PROJECT SOFTWARE USER LICENSES FOR USE BY THE ARCHITECT/ENGINEER. ACCESS WILL BE PROVIDED FROM THE START OF THE PROJECT THROUGH THE COMPLETION OF THE WARRANTY PHASE.

D. AT PROJECT COMPLETION, PROVIDE DIGITAL ARCHIVE OF ENTIRE PROJECT IN FORMAT THAT IS READABLE BY COMMON DESKTOP SOFTWARE APPLICATIONS IN FORMAT ACCEPTABLE TO ARCHITECT/ENGINEER. PROVIDE DATA IN LOCKED FORMAT TO PREVENT FURTHER CHANGES.

1.09 SUBMITTALS

A. SUBMITTALS SHALL BE REQUIRED FOR THE FOLLOWING ITEMS, AND FOR ADDITIONAL ITEMS WHERE REQUIRED ELSEWHERE IN THE SPECIFICATIONS OR ON THE DRAWINGS.

1. SUBMITTALS LIST:

REFERENCED SPECIFICATION SECTION	SUBMITTAL ITEM	COORDINATION DRAWING
26 05 00	BASIC ELECTRICAL REQUIREMENTS	
26 05 03	THROUGH PENETRATION FIRESTOPPING	
26 05 13	WIRE AND CABLE	
26 05 26	GROUNDING AND BONDING	
26 05 27	SUPPORTING DEVICES	
26 05 33	CONDUIT AND BOXES	=> 1.5"
26 05 35	SURFACE RACEWAYS	
26 05 73	POWER SYSTEM STUDY	
26 08 01	COMMISSIONING OF ELECTRICAL	
26 22 00	DRY TYPE TRANSFORMERS	YES
26 24 16	PANELBOARDS	YES
26 27 29	ELECTRIC VEHICLE CHARGING STATION	
26 28 13	FUSES	
26 28 16	DISCONNECT SWITCHES	YES

ADDRESSES

a. SUPPLIER AND MANUFACTURER'S NAMES AND ADDRESSES
b. DESCRIPTION OF ITEM SUBMITTED (USING PROJECT NOMENCLATURE) AND RELEVANT SPECIFICATION NUMBER
c. NOTATIONS OF DEVIATIONS FROM THE CONTRACT DOCUMENTS
d. OTHER PERTINENT DATA
e. PROVIDE SPACE FOR CONTRACTOR'S REVIEW STAMPS

2. COMPOSITION:
   a. SUBMITTALS SHALL BE SUBMITTED USING SPECIFICATION SECTIONS AND THE PROJECT NOMENCLATURE FOR EACH ITEM.
   b. INDIVIDUAL SUBMITTAL PACKAGES SHALL BE PREPARED FOR ITEMS IN EACH SPECIFICATION SECTION. ALL ITEMS WITHIN A SINGLE SPECIFICATION SECTION SHALL BE PACKAGED TOGETHER WHERE POSSIBLE. AN INDIVIDUAL SUBMITTAL MAY CONTAIN ITEMS FROM MULTIPLE SPECIFICATIONS SECTIONS IF THE ITEMS ARE INTIMATELY LINKED (E.G., PUMPS AND MOTORS).
   c. ALL SETS SHALL CONTAIN AN INDEX OF THE ITEMS ENCLOSED WITH A GENERAL TOPIC DESCRIPTION ON THE COVER.
3. CONTENT: SUBMITTALS SHALL INCLUDE ALL FABRICATION, ERECTION, LAYOUT, AND SETTING DRAWINGS; MANUFACTURERS' STANDARD DRAWINGS; SCHEDULES; DESCRIPTIVE LITERATURE, CATALOGS AND BROCHURES; PERFORMANCE AND TEST DATA; WIRING AND CONTROL DIAGRAMS; DIMENSIONS; SHIPPING AND OPERATING WEIGHTS; SHIPPING SPLITS; SERVICE CLEARANCES; AND ALL OTHER DRAWINGS AND DESCRIPTIVE DATA OF MATERIALS OF CONSTRUCTION AS MAY BE REQUIRED TO SHOW THAT THE MATERIALS, EQUIPMENT OR SYSTEMS AND THE LOCATION THEREOF CONFORM TO THE REQUIREMENTS OF THE CONTRACT DOCUMENTS.
4. CONTRACTOR'S APPROVAL STAMP:
   a. THE CONTRACTOR SHALL THOROUGHLY REVIEW AND APPROVE ALL SHOP DRAWINGS BEFORE SUBMITTING THEM TO THE ARCHITECT/ENGINEER. THE CONTRACTOR SHALL STAMP, DATE AND SIGN EACH SUBMITTAL CERTIFYING IT HAS BEEN REVIEWED.
   b. UNSTAMPED SUBMITTALS WILL BE REJECTED.
   c. THE CONTRACTOR'S REVIEW SHALL INCLUDE, BUT NOT BE LIMITED TO, VERIFICATION OF THE FOLLOWING:
      1) ONLY APPROVED MANUFACTURERS ARE USED.
      2) ADDENDA ITEMS HAVE BEEN INCORPORATED.
      3) CATALOG NUMBERS AND OPTIONS MATCH THOSE SPECIFIED.
      4) PERFORMANCE DATA MATCHES THAT SPECIFIED.
      5) ELECTRICAL CHARACTERISTICS AND LOADS MATCH THOSE SPECIFIED.
      6) EQUIPMENT CONNECTION LOCATIONS, SIZES, CAPACITIES, ETC. HAVE BEEN COORDINATED WITH OTHER AFFECTED TRADES.
      7) DIMENSIONS AND SERVICE CLEARANCES ARE SUITABLE FOR THE INTENDED LOCATION.
      8) EQUIPMENT DIMENSIONS ARE COORDINATED WITH SUPPORT STEEL, HOUSEKEEPING PADS, OPENINGS, ETC.
      9) CONSTRUCTABILITY ISSUES ARE RESOLVED (E.G., WEIGHTS AND DIMENSIONS ARE SUITABLE FOR GETTING THE ITEM INTO THE BUILDING AND INTO PLACE, SINKS FIT INTO COUNTERTOPS, ETC.).
   d. THE CONTRACTOR SHALL REVIEW, STAMP AND APPROVE ALL SUBCONTRACTORS' SUBMITTALS AS DESCRIBED ABOVE.
   e. THE CONTRACTOR'S APPROVAL STAMP IS REQUIRED ON ALL SUBMITTALS. APPROVAL WILL INDICATE THE CONTRACTOR'S REVIEW OF ALL MATERIAL AND A COMPLETE UNDERSTANDING OF EXACTLY WHAT IS TO BE FURNISHED. CONTRACTOR SHALL CLEARLY MARK ALL DEVIATIONS FROM THE CONTRACT DOCUMENTS ON ALL SUBMITTALS. IF DEVIATIONS ARE NOT MARKED BY THE CONTRACTOR, THEN THE ITEM SHALL BE REQUIRED TO MEET ALL DRAWING AND SPECIFICATION REQUIREMENTS.
5. SUBMITTAL IDENTIFICATION AND MARKINGS:
   a. THE CONTRACTOR SHALL CLEARLY MARK EACH ITEM WITH THE SAME NOMENCLATURE APPLIED ON THE DRAWINGS OR IN THE SPECIFICATIONS.
   b. THE CONTRACTOR SHALL CLEARLY INDICATE THE SIZE, FINISH, MATERIAL, ETC.
   c. WHERE MORE THAN ONE MODEL IS SHOWN ON A MANUFACTURER'S SHEET, THE CONTRACTOR SHALL CLEARLY INDICATE EXACTLY WHICH ITEM AND WHICH DATA IS INTENDED.
   d. ALL MARKS AND IDENTIFICATIONS ON THE SUBMITTALS SHALL BE UNAMBIGUOUS.
6. SCHEDULE SUBMITTALS TO EXPEDITE THE PROJECT. COORDINATE SUBMISSION OF RELATED ITEMS.
7. IDENTIFY VARIATIONS FROM THE CONTRACT DOCUMENTS AND PRODUCT OR SYSTEM LIMITATIONS THAT MAY BE DETRIMENTAL TO THE SUCCESSFUL PERFORMANCE OF THE COMPLETED WORK.
8. REPRODUCTION OF CONTRACT DOCUMENTS ALONE IS NOT ACCEPTABLE FOR SUBMITTALS.
9. INCOMPLETE SUBMITTALS WILL BE REJECTED WITHOUT REVIEW. PARTIAL SUBMITTALS WILL ONLY BE REVIEWED WITH PRIOR APPROVAL FROM THE ENGINEER.
10. SUBMITTALS NOT REQUIRED BY THE CONTRACT DOCUMENTS MAY BE RETURNED WITHOUT REVIEW.
11. THE ENGINEER'S RESPONSIBILITY SHALL BE TO REVIEW ONE SET OF SHOP DRAWING SUBMITTALS FOR EACH PRODUCT. IF THE FIRST SUBMITTAL IS INCOMPLETE OR DOES NOT COMPLY WITH THE DRAWINGS AND/OR SPECIFICATIONS, THE CONTRACTOR SHALL BE RESPONSIBLE TO BEAR THE COST FOR THE ARCHITECT/ENGINEER TO RECHECK AND HANDLE THE ADDITIONAL SHOP DRAWING SUBMITTALS.
12. SUBMITTALS SHALL BE REVIEWED AND APPROVED BY THE ENGINEER BEFORE RELEASING ANY EQUIPMENT FOR MANUFACTURE OR SHIPMENT.
13. CONTRACTOR'S RESPONSIBILITY FOR ERRORS, OMISSIONS OR DEVIATION FROM THE CONTRACT DOCUMENTS IN SUBMITTALS IS NOT RELIEVED BY THE ARCHITECT/ENGINEER'S APPROVAL.
14. SCHEDULE SHALL ALLOW FOR ADEQUATE TIME TO PERFORM ORDERLY AND PROPER REVIEW OF SUBMITTALS, INCLUDING TIME FOR CONSULTANTS AND OWNER IF REQUIRED, AND RESUBMITTALS BY CONTRACTOR IF NECESSARY, AND TO CAUSE NO DELAY IN WORK OR IN ACTIVITIES OF OWNER OR OTHER CONTRACTORS.
   a. ALLOW AT LEAST TWO WEEKS FOR ARCHITECT™™S/ENGINEER'S REVIEW AND PROCESSING OF EACH SUBMITTAL, EXCLUDING MAILING.

B. ELECTRONIC SUBMITTAL PROCEDURES:

1. DISTRIBUTION: EMAIL SUBMITTALS AS ATTACHMENTS TO ALL PARTIES DESIGNATED BY THE ARCHITECT/ENGINEER, UNLESS A WEB-BASED SUBMITTAL PROGRAM IS USED.
2. TRANSMITTALS: EACH SUBMITTAL SHALL INCLUDE AN INDIVIDUAL ELECTRONIC LETTER OF TRANSMITTAL.
3. FORMAT: ELECTRONIC SUBMITTALS SHALL BE IN PDF FORMAT ONLY. SCANNED COPIES, IN PDF FORMAT, OF PAPER ORIGINALS ARE ACCEPTABLE. SUBMITTALS THAT ARE NOT LEGIBLE WILL BE REJECTED. DO NOT SET ANY PERMISSION RESTRICTIONS ON FILES; PROTECTED, LOCKED, OR SECURED DOCUMENTS WILL BE REJECTED.
4. FILE NAMES: ELECTRONIC SUBMITTAL FILE NAMES SHALL INCLUDE THE RELEVANT SPECIFICATION SECTION NUMBER FOLLOWED BY A DESCRIPTION OF THE ITEM SUBMITTED, AS FOLLOWS. WHERE POSSIBLE, INCLUDE THE TRANSMITTAL AS THE FIRST PAGE OF THE PDF INSTEAD OF USING MULTIPLE ELECTRONIC FILES.
   a. SUBMITTAL FILE NAME: 26 XX XX.DESCRIPTION.YYYYMMDD
   b. TRANSMITTAL FILE NAME: 26 XX XX.DESCRIPTION.YYYYMMDD
5. FILE SIZE: FILES SHALL BE TRANSMITTED VIA A PRE-APPROVED METHOD. LARGER FILES MAY REQUIRE AN ALTERNATIVE TRANSFER METHOD, WHICH SHALL ALSO BE PRE-APPROVED.

1.10 SCHEDULE OF VALUES

A. THE REQUIREMENTS HEREIN ARE IN ADDITION TO THE PROVISIONS OF DIVISION 1.

B. FORMAT:

1. USE AIA DOCUMENT CONTINUATION SHEETS G703 OR ANOTHER SIMILAR FORM APPROVED BY THE OWNER AND ARCHITECT/ENGINEER.
2. SUBMIT IN EXCEL FORMAT.
3. SUPPORT VALUES GIVEN WITH SUBSTANTIATING DATA.

C. PREPARATION:

1. ITEMIZE WORK REQUIRED BY EACH SPECIFICATION SECTION AND LIST ALL PROVIDERS. ALL WORK PROVIDED BY SUBCONTRACTORS AND MAJOR SUPPLIERS SHALL BE LISTED ON THE SCHEDULE OF VALUES. LIST EACH SUBCONTRACTOR AND SUPPLIER BY COMPANY NAME.
2. BREAK DOWN ALL COSTS INTO:
   a. MATERIAL: DELIVERED COST OF PRODUCT WITH TAXES PAID.
   b. LABOR: LABOR COST, EXCLUDING OVERHEAD AND PROFIT.
3. ITEMIZE THE COST FOR EACH OF THE FOLLOWING:
   a. OVERHEAD AND PROFIT.
   b. BONDS.
   c. INSURANCE.
   d. G

3.03 ENGINEER OBSERVATION OF WORK

A. THE CONTRACTOR SHALL PROVIDE SEVEN (7) CALENDAR DAYS' NOTICE TO THE ENGINEER PRIOR TO:
1. PLACING FILL OVER UNDERGROUND AND UNDERSLAB UTILITIES.
2. COVERING EXTERIOR WALLS, INTERIOR PARTITIONS AND CHASES.
3. INSTALLING HARD OR SUSPENDED CEILINGS AND SOFFITS.

B. THE ENGINEER WILL REVIEW THE INSTALLATION AND PROVIDE A WRITTEN REPORT NOTING DEFICIENCIES REQUIRING CORRECTION. THE CONTRACTOR'S SCHEDULE SHALL ACCOUNT FOR THESE REVIEWS AND SHOW THEM AS LINE ITEMS IN THE APPROVED SCHEDULE.

C. ABOVE-CEILING FINAL OBSERVATION:
1. ALL WORK ABOVE THE CEILINGS MUST BE COMPLETE PRIOR TO THE ARCHITECT/ENGINEER'S REVIEW. THIS INCLUDES, BUT IS NOT LIMITED TO:
a. ALL JUNCTION BOXES ARE CLOSED AND IDENTIFIED IN ACCORDANCE WITH SECTION 26 05 53 ELECTRICAL IDENTIFICATION.
b. LUMINAIRES, INCLUDING CEILING-MOUNTED EXIT AND EMERGENCY LIGHTS, ARE INSTALLED AND OPERATIONAL.
c. LUMINAIRE WHIPS ARE SUPPORTED ABOVE THE CEILING.
d. CONDUIT IDENTIFICATION IS INSTALLED IN ACCORDANCE WITH SECTION 26 05 53 ELECTRICAL IDENTIFICATION.
e. LUMINAIRES ARE SUSPENDED INDEPENDENTLY OF THE CEILING SYSTEM WHEN REQUIRED BY THESE CONTRACT DOCUMENTS.
f. ALL WALL PENETRATIONS HAVE BEEN SEALED.
2. TO PREVENT THE ABOVE-CEILING FINAL OBSERVATION FROM OCCURRING TOO EARLY, THE CONTRACTOR SHALL REVIEW THE STATUS OF THE WORK AND CERTIFY, IN WRITING, THAT THE WORK IS READY FOR THE ABOVE-CEILING FINAL OBSERVATION.
3. IT IS UNDERSTOOD THAT IF THE ARCHITECT/ENGINEER FINDS THE CEILINGS HAVE BEEN INSTALLED PRIOR TO THIS REVIEW AND PRIOR TO SEVEN DAYS ELAPSING, THE ARCHITECT/ENGINEER MAY NOT RECOMMEND FURTHER PAYMENTS TO THE CONTRACTOR UNTIL FULL ACCESS HAS BEEN PROVIDED.

3.04 PROJECT CLOSEOUT

A. THE FOLLOWING PARAGRAPHS SUPPLEMENT THE REQUIREMENTS OF DIVISION 1.

B. IDPH PRE-OCCUPANCY REQUIREMENTS:
1. EACH CONTRACTOR MUST SUBMIT ALL FORMS AND CERTIFICATIONS REQUIRED BY IDPH RELATING TO THEIR WORK AT 85% COMPLETION OF THE PROJECT OR WHEN DIRECTED BY THE OWNER/ENGINEER.

C. FINAL JOBSITE OBSERVATION:
1. TO PREVENT THE FINAL JOBSITE OBSERVATION FROM OCCURRING TOO EARLY, THE CONTRACTOR SHALL REVIEW THE COMPLETION STATUS OF THE PROJECT AND CERTIFY THAT THE JOB IS READY FOR THE FINAL JOBSITE OBSERVATION.
2. ATTACHED TO THE END OF THIS SECTION IS A TYPICAL LIST OF ITEMS THAT REPRESENT THE DEGREE OF JOB COMPLETENESS EXPECTED PRIOR TO REQUESTING A REVIEW. THE CONTRACTOR SHALL SIGN THE ATTACHED CERTIFICATION AND RETURN IT TO THE ARCHITECT/ENGINEER SO THAT THE FINAL OBSERVATION CAN BE SCHEDULED.
3. IT IS UNDERSTOOD THAT IF THE ARCHITECT/ENGINEER FINDS THE JOB NOT READY FOR THE FINAL OBSERVATION AND ADDITIONAL TRIPS AND OBSERVATIONS ARE REQUIRED TO BRING THE PROJECT TO COMPLETION, THE COST OF THE ADDITIONAL TIME AND EXPENSES INCURRED BY THE ARCHITECT/ENGINEER WILL BE DEDUCTED FROM THE CONTRACTOR'S FINAL PAYMENT.
4. CONTRACTOR SHALL NOTIFY ARCHITECT/ENGINEER 48 HOURS PRIOR TO INSTALLATION OF CEILINGS OR LAY-IN CEILING TILES.

D. THE FOLLOWING MUST BE SUBMITTED BEFORE ARCHITECT/ENGINEER RECOMMENDS FINAL PAYMENT:
1. OPERATION AND MAINTENANCE MANUALS WITH COPIES OF APPROVED SHOP DRAWINGS.
2. RECORD DOCUMENTS INCLUDING MARKED-UP DRAWINGS AND SPECIFICATIONS.
3. A REPORT DOCUMENTING THE INSTRUCTIONS GIVEN TO THE OWNER'S REPRESENTATIVES COMPLETE WITH THE NUMBER OF HOURS SPENT IN THE INSTRUCTION. THE REPORT SHALL BEAR THE SIGNATURE OF AN AUTHORIZED AGENT OF THIS CONTRACTOR AND SHALL BE SIGNED BY THE OWNER'S REPRESENTATIVES.
4. PROVIDE SPARE PARTS, MAINTENANCE, AND EXTRA MATERIALS IN QUANTITIES SPECIFIED IN INDIVIDUAL SPECIFICATION SECTIONS. DELIVER TO PROJECT SITE AND SUBMIT RECEIPT TO ARCHITECT/ENGINEER.
5. INSPECTION AND TESTING REPORT BY THE FIRE ALARM SYSTEM MANUFACTURER.
6. START-UP REPORTS ON ALL EQUIPMENT REQUIRING A FACTORY INSTALLATION OR START-UP.

E. CIRCUIT DIRECTORIES:
1. PROVIDE CUSTOM TYPED CIRCUIT DIRECTORY FOR EACH BRANCH CIRCUIT PANELBOARD. PROVIDE UPDATED CUSTOM TYPED CIRCUIT DIRECTORY FOR EACH EXISTING BRANCH CIRCUIT PANELBOARD WITH NEW OR REVISED CIRCUITS PER THE SCOPE OF WORK. LABEL SHALL INCLUDE EQUIPMENT NAME OR FINAL APPROVED ROOM NAME, ROOM NUMBER, AND LOAD TYPE FOR EACH CIRCUIT (EXAMPLES: SUMP SP-1 OR ROOM 101 RECEPT). REVISE DIRECTORY TO REFLECT CIRCUIT CHANGES REQUIRED TO BALANCE PHASE LOADS. PRINTED COPIES OF THE BID DOCUMENT PANEL SCHEDULES ARE NOT ACCEPTABLE AS CIRCUIT DIRECTORIES.

3.05 OPERATION AND MAINTENANCE MANUALS

A. GENERAL:
1. PROVIDE AN ELECTRONIC COPY OF THE O&M MANUALS AS DESCRIBED BELOW FOR ARCHITECT/ENGINEER'S REVIEW AND APPROVAL. THE ELECTRONIC COPY SHALL BE CORRECTED AS REQUIRED TO ADDRESS THE ARCHITECT/ENGINEER'S COMMENTS. ONCE CORRECTED, ELECTRONIC COPIES AND PAPER COPIES SHALL BE DISTRIBUTED AS DIRECTED BY THE ARCHITECT/ENGINEER.
2. APPROVED O&M MANUALS SHALL BE COMPLETED AND IN THE OWNER'S POSSESSION PRIOR TO OWNER'S ACCEPTANCE AND AT LEAST 10 DAYS PRIOR TO INSTRUCTION OF OPERATING PERSONNEL.

B. OPERATION AND MAINTENANCE INSTRUCTIONS SHALL INCLUDE:
1. TITLE PAGE: INCLUDE TITLE PAGE WITH PROJECT TITLE, ARCHITECT, ENGINEER, CONTRACTOR, ALL SUBCONTRACTORS, AND MAJOR EQUIPMENT SUPPLIERS, WITH ADDRESSES, TELEPHONE NUMBERS, WEBSITE ADDRESSES, EMAIL ADDRESSES AND POINT OF CONTACTS. WEBSITE URLS AND EMAIL ADDRESSES SHALL BE ACTIVE LINKS IN THE ELECTRONIC SUBMITTAL.
2. TABLE OF CONTENTS: INCLUDE A TABLE OF CONTENTS DESCRIBING SPECIFICATION SECTION, SYSTEMS, MAJOR EQUIPMENT, AND INDIVIDUAL ITEMS.
3. COPIES OF ALL FINAL APPROVED SHOP DRAWINGS AND SUBMITTALS. INCLUDE ARCHITECT'S/ENGINEER'S SHOP DRAWING REVIEW COMMENTS. INSERT THE INDIVIDUAL SHOP DRAWING DIRECTLY AFTER THE OPERATION AND MAINTENANCE INFORMATION FOR THE ITEM(S) IN THE REVIEW FORM.
4. COPIES OF ALL FACTORY INSPECTIONS AND/OR EQUIPMENT STARTUP REPORTS.
5. COPIES OF WARRANTIES.
6. SCHEMATIC WIRING DIAGRAMS OF THE EQUIPMENT THAT HAVE BEEN UPDATED FOR FIELD CONDITIONS. FIELD WIRING SHALL HAVE LABEL NUMBERS TO MATCH DRAWINGS.
7. DIMENSIONAL DRAWINGS OF EQUIPMENT.
8. DETAILED PARTS LISTS WITH LISTS OF SUPPLIERS.
9. OPERATING PROCEDURES FOR EACH SYSTEM.
10. MAINTENANCE SCHEDULE AND PROCEDURES. INCLUDE A CHART LISTING MAINTENANCE REQUIREMENTS AND FREQUENCY.
11. REPAIR PROCEDURES FOR MAJOR COMPONENTS.
12. REPLACEMENT PARTS AND SERVICE MATERIAL REQUIREMENTS FOR EACH SYSTEM AND THE FREQUENCY OF SERVICE REQUIRED.
13. INSTRUCTION BOOKS, CARDS, AND MANUALS FURNISHED WITH THE EQUIPMENT.
14. INCLUDE RECORD DRAWINGS OF THE ONE-LINE DIAGRAMS FOR EACH MAJOR SYSTEM. THE GRAPHIC FOR EACH PIECE OF EQUIPMENT SHOWN ON THE ONE-LINE DIAGRAM SHALL BE AN ACTIVE LINK TO ITS ASSOCIATED OPERATION & MAINTENANCE DATA.
15. COPIES OF ALL PANEL SCHEDULES IN ELECTRONIC MICROSOFT EXCEL SPREADSHEET (.XLSX) FILE. EACH PANELBOARD SHALL BE A SEPARATE TAB IN THE WORKBOOK.

3.06 INSTRUCTING THE OWNER'S REPRESENTATIVE

A. ADEQUATELY INSTRUCT THE OWNER'S DESIGNATED REPRESENTATIVES IN THE MAINTENANCE, CARE, AND OPERATION OF THE COMPLETE SYSTEMS INSTALLED UNDER THIS CONTRACT.

B. PROVIDE VERBAL AND WRITTEN INSTRUCTIONS TO THE OWNER'S REPRESENTATIVES BY FACTORY PERSONNEL IN THE CARE, MAINTENANCE, AND OPERATION OF THE EQUIPMENT AND SYSTEMS.

C. CONTRACTOR SHALL MAKE A DVD VIDEO RECORDING OF INSTRUCTIONS TO THE OWNER WHILE EXPLAINING THE SYSTEM SO ADDITIONAL PERSONNEL MAY VIEW THE INSTRUCTIONS AT A LATER DATE. THE VIDEO RECORDING SHALL BE THE PROPERTY OF THE OWNER.

D. THE OWNER HAS THE OPTION TO MAKE A VIDEO RECORDING OF ALL INSTRUCTIONS. COORDINATE SCHEDULE OF INSTRUCTIONS TO FACILITATE THIS RECORDING.

E. THE INSTRUCTIONS SHALL INCLUDE:
1. MAINTENANCE OF EQUIPMENT.
2. START-UP PROCEDURES FOR ALL MAJOR EQUIPMENT.
3. DESCRIPTION OF EMERGENCY SYSTEM OPERATION.

F. NOTIFY THE ARCHITECT/ENGINEER OF THE TIME AND PLACE FOR THE VERBAL INSTRUCTIONS TO BE GIVEN TO THE OWNER'S REPRESENTATIVE SO A REPRESENTATIVE CAN BE PRESENT IF DESIRED.

G. MINIMUM HOURS OF INSTRUCTION TIME FOR EACH ITEM AND/OR SYSTEM SHALL BE AS INDICATED IN EACH INDIVIDUAL SPECIFICATION SECTION.

H. OPERATING INSTRUCTIONS:
1. CONTRACTOR IS RESPONSIBLE FOR ALL INSTRUCTIONS TO THE OWNER'S REPRESENTATIVES FOR THE ELECTRICAL AND SPECIALIZED SYSTEMS.
2. IF THE CONTRACTOR DOES NOT HAVE STAFF THAT CAN ADEQUATELY PROVIDE THE REQUIRED INSTRUCTIONS, THE CONTRACTOR SHALL INCLUDE IN THE BID AN ADEQUATE AMOUNT TO REIMBURSE THE OWNER FOR THE ARCHITECT/ENGINEER TO PERFORM THESE SERVICES.

3.07 RECORD DOCUMENTS

A. THE FOLLOWING PARAGRAPHS SUPPLEMENT DIVISION 1 REQUIREMENTS.

B. MAINTAIN AT THE JOB SITE A SEPARATE AND COMPLETE SET OF ELECTRICAL DRAWINGS AND SPECIFICATIONS WITH ALL CHANGES MADE TO THE SYSTEMS CLEARLY AND PERMANENTLY MARKED IN COMPLETE DETAIL.

C. MARK DRAWINGS AND SPECIFICATIONS TO INDICATE APPROVED SUBSTITUTIONS; CHANGE ORDERS, AND ACTUAL EQUIPMENT AND MATERIALS USED. ALL CHANGE ORDERS, RFI RESPONSES, CLARIFICATIONS AND OTHER SUPPLEMENTAL INSTRUCTIONS SHALL BE MARKED ON THE DOCUMENTS. RECORD DOCUMENTS THAT MERELY REFERENCE THE EXISTENCE OF THE ABOVE ITEMS ARE NOT ACCEPTABLE. SHOULD THIS CONTRACTOR FAIL TO COMPLETE RECORD DOCUMENTS AS REQUIRED BY THIS CONTRACT, THIS CONTRACTOR SHALL REIMBURSE ENGINEER FOR ALL COSTS TO DEVELOP RECORD DOCUMENTS THAT COMPLY WITH THIS REQUIREMENT. REIMBURSEMENT SHALL BE MADE AT THE ENGINEER'S HOURLY RATES IN EFFECT AT THE TIME OF WORK.

D. RECORD CHANGES DAILY AND KEEP THE MARKED DRAWINGS AVAILABLE FOR THE ENGINEER'S EXAMINATION AT ANY NORMAL WORK TIME.

E. UPON COMPLETING THE JOB, AND BEFORE FINAL PAYMENT IS MADE, GIVE THE MARKED-UP DRAWINGS TO THE ENGINEER.

F. RECORD ACTUAL ROUTING OF CONDUITS EXCEEDING 2 INCHES.

3.08 PAINTING

A. PAINT ALL EQUIPMENT THAT IS MARRED OR DAMAGED PRIOR TO THE OWNER'S ACCEPTANCE. PAINT AND COLOR SHALL MATCH ORIGINAL EQUIPMENT PAINT AND SHALL BE OBTAINED FROM THE EQUIPMENT SUPPLIER IF AVAILABLE. ALL EQUIPMENT SHALL HAVE A FINISHED COAT OF PAINT APPLIED UNLESS SPECIFICALLY ALLOWED TO BE PROVIDED WITH A PRIME COAT ONLY.

B. EQUIPMENT IN FINISHED AREAS THAT WILL BE PAINTED TO MATCH THE ROOM DECOR WILL BE PAINTED BY OTHERS. SHOULD THIS CONTRACTOR INSTALL EQUIPMENT IN A FINISHED AREA AFTER THE AREA HAS BEEN PAINTED, THE CONTRACTOR SHALL HAVE THE EQUIPMENT AND ALL ITS SUPPORTS, HANGERS, ETC., PAINTED TO MATCH THE ROOM DECOR. PAINTING SHALL BE PERFORMED AS DESCRIBED IN PROJECT SPECIFICATIONS.

C. EQUIPMENT CABINETS, CASINGS, COVERS, METAL JACKETS, ETC., LOCATED IN EQUIPMENT ROOMS OR CONCEALED SPACES, SHALL BE FURNISHED IN STANDARD FINISH, FREE FROM SCRATCHES, ABRASIONS, CHIPPINGS, ETC.

D. EQUIPMENT IN OCCUPIED SPACES, OR IF STANDARD TO THE UNIT, SHALL HAVE A BAKED PRIMER WITH BAKED ENAMEL FINISH COAT FREE FROM SCRATCHES, ABRASIONS, CHIPPING, ETC. IF COLOR OPTION IS SPECIFIED OR IS STANDARD TO THE UNIT, VERIFY WITH THE ARCHITECT THE COLOR PREFERENCE BEFORE ORDERING.

E. PAINT ALL EQUIPMENT IN UNFINISHED AREAS SUCH AS BOILER ROOM, MECHANICAL SPACES, AND STORAGE ROOMS. EQUIPMENT FURNISHED WITH A SUITABLE FACTORY FINISH NEED NOT BE PAINTED; PROVIDED THE FACTORY APPLIED FINISH IS NOT MARRED OR SPATTERED. IF SO, EQUIPMENT SHALL BE REFINISHED WITH THE SAME PAINT AS WAS FACTORY APPLIED.

F. ALL ELECTRICAL CONDUIT AND EQUIPMENT, FITTINGS, HANGERS, STRUCTURAL SUPPORTS, ETC., IN UNFINISHED AREAS, SUCH AS EQUIPMENT AND STORAGE ROOM AREA, SHALL BE PAINTED TWO (2) COATS OF OIL PAINT OF COLORS SELECTED BY THE ARCHITECT.

G. DO NOT PAINT ELECTRIC CONDUITS IN CRAWL SPACES, TUNNELS, OR SPACES ABOVE SUSPENDED CEILINGS EXCEPT THAT WHERE CONDUIT IS IN A DAMP LOCATION GIVE EXPOSED THREADS AT JOINTS TWO COATS OF SEALER AFTER JOINT IS MADE UP.

H. AFTER SURFACES HAVE BEEN THOROUGHLY CLEANED AND ARE FREE OF OIL, DIRT OR OTHER FOREIGN MATTER, PAINT ALL RACEWAY AND EQUIPMENT WITH THE FOLLOWING:
1. BARE METAL SURFACES - APPLY ONE COAT OF METAL PRIMER SUITABLE FOR THE METAL BEING PAINTED. FINISH WITH TWO COATS OF ALKYD BASE ENAMEL PAINT.
2. PLASTIC SURFACES - PAINT PLASTIC SURFACES WITH TWO COATS OF SEMI-GLOSS ACRYLIC LATEX PAINT.

3.09 ADJUST AND CLEAN

A. THOROUGHLY CLEAN ALL EQUIPMENT AND SYSTEMS PRIOR TO THE OWNER'S FINAL ACCEPTANCE OF THE PROJECT.

B. CLEAN ALL FOREIGN PAINT, GREASE, OIL, DIRT, LABELS, STICKERS, ETC. FROM ALL EQUIPMENT.

C. REMOVE ALL RUBBISH, DEBRIS, ETC., ACCUMULATED DURING CONSTRUCTION FROM THE PREMISES.

3.10 SPECIAL REQUIREMENTS

A. COORDINATE THE INSTALLATION OF ALL EQUIPMENT, CONTROLS, DEVICES, ETC., WITH OTHER TRADES TO MAINTAIN CLEAR ACCESS AREA FOR SERVICING.

B. INSTALL ALL EQUIPMENT TO MAXIMIZE ACCESS TO PARTS NEEDING SERVICE OR MAINTENANCE. REVIEW THE FINAL LOCATION, PLACEMENT, AND ORIENTATION OF EQUIPMENT WITH THE OWNER'S REPRESENTATIVE PRIOR TO SETTING EQUIPMENT.

C. INSTALLATION OF EQUIPMENT OR DEVICES WITHOUT REGARD TO COORDINATION OF ACCESS REQUIREMENTS AND CONFIRMATION WITH THE OWNER'S REPRESENTATIVE WILL RESULT IN REMOVAL AND REINSTALLATION OF THE EQUIPMENT AT THE CONTRACTOR'S EXPENSE.

D. RACEWAY AND CABLE ROUTING RESTRICTIONS: RACEWAYS AND CABLE ARE RESTRICTED FROM BEING ROUTED IN THE FOLLOWING LOCATIONS, UNLESS SERVING THE SPACE OR PERMITTED BY THE AUTHORITY HAVING JURISDICTION.
1. CDPH STANDARD METHOD V1.1-2010 - STANDARD METHOD FOR THE TESTING AND EVALUATION OF VOLATILE ORGANIC CHEMICAL EMISSIONS VOC FROM INDOOR SOURCES USING ENVIRONMENTAL CHAMBERS VERSION 1.1.
2. SOUTH COAST AIR QUALITY MANAGEMENT DISTRICT RULE 1168 - ADHESIVE AND SEALANT APPLICATIONS. ALL ADHESIVES AND SEALANTS WET-APPLIED ON SITE SHALL COMPLY WITH THE APPLICABLE CHEMICAL CONTENT REQUIREMENTS OF SCAQMD RULE 1168.
3. SOUTH COAST AIR QUALITY MANAGEMENT DISTRICT RULE SCAQMD 1113 - WET APPLIED PAINTS AND COATINGS. ALL PAINTS AND COATINGS WET-APPLIED ON SITE MUST MEET THE APPLICABLE VOC LIMITS OF SCAQMD RULE 1113.

3.11 INDOOR AIR QUALITY (IAQ) MAINTENANCE FOR OCCUPIED FACILITIES UNDER CONSTRUCTION

A. WITHIN THE LIMITS OF CONSTRUCTION:
1. THE ELECTRICAL CONTRACTOR SHALL COORDINATE ALL WORK WITH THE CONTRACTOR RESPONSIBLE FOR IAQ.
2. THE MEANS, METHODS AND MATERIALS USED BY THE ELECTRICAL CONTRACTOR SHALL BE COORDINATED WITH THE CONTRACTOR RESPONSIBLE FOR IAQ AND SHALL COMPLY WITH THE IAQ REQUIREMENTS SET FORTH IN DIVISION 1 AND DIVISION 21/22/23 OF THESE SPECIFICATIONS.

B. OUTSIDE THE LIMITS OF CONSTRUCTION:
1. IAQ SHALL BE THE RESPONSIBILITY OF THE ELECTRICAL CONTRACTOR FOR WORK THAT IS REQUIRED OUTSIDE THE LIMITS OF CONSTRUCTION.
2. THE ELECTRICAL CONTRACTOR IS RESPONSIBLE FOR THE IAQ SET FORTH IN DIVISION 1 AND DIVISION 21/22/23 OF THESE SPECIFICATIONS.
3. THE ELECTRICAL CONTRACTOR SHALL REVIEW AND COORDINATE ALL IAQ PLANS AND PROCEDURES WITH THE OWNER'S IAQ REPRESENTATIVE.

C. CONTRACTORS SHALL MAKE ALL REASONABLE EFFORTS TO PREVENT CONSTRUCTION ACTIVITIES FROM AFFECTING THE AIR QUALITY OF THE OCCUPIED AREAS OF THE BUILDING OR OUTDOOR AREAS NEAR THE BUILDING. THESE MEASURES SHALL INCLUDE, BUT NOT BE LIMITED TO:
1. GENERAL CONTRACTOR SHALL ERECT AND MAINTAIN DUST BARRIERS THROUGHOUT THE CONSTRUCTION WORK. THESE BARRIERS SHALL BE REASONABLY AIRTIGHT AND SHALL PREVENT ENTRY INTO THE CONSTRUCTION ZONE BY UNAUTHORIZED PERSONS. REASONABLY AIRTIGHT MEANS CONSTRUCTION EQUIVALENT TO FULL-HEIGHT TEMPORARY OR PERMANENT WALLS WITH JOINTS TAPED OR SEALED, AND SHAFTS AND OTHER PENETRATIONS SEALED AS WELL AS POSSIBLE. FIRE RESISTANT POLYETHYLENE IS ACCEPTABLE; IF FLAME SPREAD/SMOKE DEVELOPED RATINGS ARE DEMONSTRATED TO CONFORM TO THE APPLICABLE BUILDING CODES AND LICENSING ACTS.
2. THE CONTRACTOR SHALL CONTINUOUSLY MAINTAIN THE CONSTRUCTION ZONE UNDER A NEGATIVE PRESSURE OF AT LEAST 0.01" W.G. MINIMUM RELATIVE TO ALL ADJACENT AREAS OF THE BUILDING.
a. EXHAUST FANS USED FOR THIS PURPOSE SHALL FILTER AIR AND DISCHARGE IT OUTDOORS OR TO THE LEAST POPULATED AREA ADJACENT TO THE CONSTRUCTION WORK USING NEGATIVE AIR MACHINES DESIGNED SPECIFICALLY FOR THIS PURPOSE. ALL FILTRATION FOR AIR RECIRCULATED BACK INTO THE BUILDING SHALL BE HEPA (99.97% DOP EFFICIENCY) FOR WORK ADJACENT TO HEALTHCARE OR ELDERLY FACILITIES. IF NO WORK IS ADJACENT TO THESE AREAS, 95% FILTRATION IS ACCEPTABLE. FILTERING AIR DISCHARGED TO OUTDOORS SHALL BE ACCOMPLISHED WITH 30% FILTERS.
b. IF AIR IS DISCHARGED OUTDOORS, MAINTAIN ALL REQUIRED DISTANCES TO DOORS, WINDOWS, AIR INTAKES, ETC.
c. IF HIGH LEVELS OF VOLATILE ORGANIC COMPOUNDS (VOC'S) OR ODORS ARE RELEASED, ACTIVATED CARBON OR EQUIVALENT FILTRATION SHALL ALSO BE EMPLOYED. EXHAUST SHALL NOT DISCHARGE NEAR DOORS, AIR INTAKES, PEDESTRIANS, GATHERING AREAS, OR OPERABLE WINDOWS.
d. ADJUSTING EXISTING AIR HANDLING EQUIPMENT TO ASSIST IN PRESSURE CONTROL IS ACCEPTABLE, IF APPROVED BY THE OWNER AND THE AUTHORITY HAVING JURISDICTION.
e. SEAL RETURN, EXHAUST, AND SUPPLY AIR OPENINGS IN OR NEAR THE CONSTRUCTION ZONE THAT SERVE EXISTING AIR HANDLING SYSTEMS, AND REBALANCE THE SYSTEMS FOR PROPER OPERATION. IF THIS IS IMPRACTICAL, ADD FILTERS AT THE INTAKES OF SUFFICIENT CROSS SECTIONAL AREA TO MINIMIZE THE PRESSURE DROP AND AVOID THE NEED FOR REBALANCING.
f. MAINTAIN PRESSURE CONTROL ONE HOUR BEFORE AND AFTER ALL CONSTRUCTION PERIODS, AND 24 HOURS PER DAY IN HEALTHCARE OR ELDERLY FACILITIES.
3. ALL CONTRACTORS SHALL ENDEAVOR TO MINIMIZE THE AMOUNT OF CONTAMINANTS GENERATED DURING CONSTRUCTION. METHODS TO BE EMPLOYED SHALL INCLUDE, BUT NOT BE LIMITED TO:
a. MINIMIZING THE AMOUNT OF DUST GENERATED.
b. REDUCING SOLVENT FUMES AND VOC EMISSIONS.
c. MAINTAIN GOOD HOUSEKEEPING PRACTICES, INCLUDING SWEEPING AND PERIODIC DUST AND DEBRIS REMOVAL. THERE SHOULD BE NO VISIBLE HAZE IN THE AIR.
4. REQUEST THAT THE OWNER DESIGNATE AN IAQ REPRESENTATIVE.
5. REVIEW AND RECEIVE APPROVAL FROM THE OWNER'S IAQ REPRESENTATIVE FOR ALL IAQ-RELATED CONSTRUCTION ACTIVITIES AND NEGATIVE PRESSURE CONTAINMENT PLANS.
6. INFORM THE IAQ REPRESENTATIVE OF ALL CONDITIONS THAT COULD ADVERSELY IMPACT IAQ, INCLUDING OPERATIONS THAT WILL PRODUCE HIGHER THAN NORMAL DUST PRODUCTION OR ODORS.
7. SCHEDULE ACTIVITIES THAT MAY CAUSE IAQ CONDITIONS THAT ARE NOT ACCEPTABLE TO THE OWNER'S IAQ REPRESENTATIVE DURING UNOCCUPIED PERIODS.
8. REQUEST COPIES OF AND FOLLOW ALL OWNER'S IAQ AND INFECTION CONTROL POLICIES.
9. UNLESS NO OTHER ACCESS IS POSSIBLE, THE ENTRANCE TO CONSTRUCTION SITE SHALL NOT BE THROUGH THE EXISTING FACILITY.
10. TO MINIMIZE GROWTH OF INFECTIOUS ORGANISMS, DO NOT PERMIT DAMP AREAS IN OR NEAR THE CONSTRUCTION AREA TO REMAIN FOR OVER 24 HOURS.
11. IN ADDITION TO THE CRITERIA ABOVE, PROVIDE MEASURES AS RECOMMENDED IN THE SMACNA "IAQ GUIDELINES FOR OCCUPIED BUILDINGS UNDER CONSTRUCTION".

3.12 SYSTEM STARTING AND ADJUSTING

A. THE ELECTRICAL SYSTEMS SHALL BE COMPLETE AND OPERATING. SYSTEM STARTUP, TESTING, ADJUSTING, AND BALANCING TO OBTAIN SATISFACTORY SYSTEM PERFORMANCE IS THE RESPONSIBILITY OF THE CONTRACTOR. THIS INCLUDES ALL CALIBRATION AND ADJUSTMENT OF ELECTRICAL CONTROLS, BALANCING OF LOADS, TROUBLESHOOTING AND VERIFICATION OF SOFTWARE, AND FINAL ADJUSTMENTS THAT MAY BE NEEDED.

B. COMPLETE ALL MANUFACTURER-RECOMMENDED STARTUP PROCEDURES AND CHECKLISTS TO VERIFY PROPER EQUIPMENT OPERATION AND DOES NOT POSE A DANGER TO PERSONNEL OR PROPERTY.

C. ALL OPERATING CONDITIONS AND CONTROL SEQUENCES SHALL BE TESTED DURING THE START-UP PERIOD. TESTING ALL INTERLOCKS, SAFETY SHUT-DOWNS, CONTROLS, AND ALARMS.

D. THE CONTRACTOR, SUBCONTRACTORS, AND EQUIPMENT SUPPLIERS SHALL HAVE SKILLED TECHNICIANS TO ENSURE THAT ALL SYSTEMS PERFORM PROPERLY. IF THE ARCHITECT/ENGINEER IS REQUESTED TO VISIT THE JOB SITE FOR TROUBLE SHOOTING, ASSISTING IN START-UP, OBTAINING SATISFACTORY EQUIPMENT OPERATION, RESOLVING INSTALLATION AND/OR WORKMANSHIP PROBLEMS, EQUIPMENT SUBSTITUTION ISSUES OR UNSATISFACTORY SYSTEM PERFORMANCE, INCLUDING CALL BACKS DURING THE WARRANTY PERIOD, THROUGH NO FAULT OF THE DESIGN; THE CONTRACTOR SHALL REIMBURSE THE OWNER ON A TIME AND MATERIALS BASIS FOR SERVICES RENDERED AT THE ARCHITECT/ENGINEER'S STANDARD HOURLY RATES IN EFFECT WHEN THE SERVICES ARE REQUESTED. THE CONTRACTOR SHALL PAY THE OWNER FOR SERVICES REQUIRED THAT ARE PRODUCT, INSTALLATION OR WORKMANSHIP RELATED. PAYMENT IS DUE WITHIN 30 DAYS AFTER SERVICES ARE RENDERED.

3.13 FIELD QUALITY CONTROL

A. GENERAL:
1. CONDUCT ALL TESTS REQUIRED DURING AND AFTER CONSTRUCTION. SUBMIT TEST RESULTS IN NETA FORMAT, OR EQUIVALENT FORM, THAT SHOWS THE TEST EQUIPMENT USED, CALIBRATION DATE, TESTER'S NAME, AMBIENT TEST CONDITIONS, HUMIDITY, CONDUCTOR LENGTH, AND RESULTS CORRECTED TO 40°C.
2. SUPPLY NECESSARY INSTRUMENTS, METERS, ETC., FOR THE TESTS. SUPPLY COMPETENT TECHNICIANS WITH TRAINING IN THE PROPER TESTING TECHNIQUES.
3. ALL CABLES AND WIRES SHALL BE TESTED FOR SHORTS AND GROUNDS FOLLOWING INSTALLATION AND CONNECTION TO DEVICES. REPLACE SHORTED OR GROUNDED WIRES AND CABLES.
4. ANY WIRING DEVICE, ELECTRICAL APPARATUS OR LUMINAIRE, IF GROUNDED OR SHORTED ON ANY INTEGRAL "LIVE" PART, SHALL HAVE ALL DEFECTIVE PARTS OR MATERIALS REPLACED.
5. TEST CABLE INSULATION OF SERVICE AND PANEL FEEDER CONDUCTORS FOR PROPER INSULATION VALUES. TESTS SHALL INCLUDE THE CABLE, ALL SPLICES, AND ALL TERMINATIONS. EACH CONDUCTOR SHALL BE TESTED AND SHALL TEST FREE OF SHORT CIRCUITS AND GROUNDS AND HAVE AN INSULATION VALUE NOT LESS THAN ELECTRICAL CODE STANDARDS. TAKE READINGS BETWEEN CONDUCTORS, AND BETWEEN CONDUCTORS AND GROUND.
6. IF THE RESULTS OBTAINED IN THE TESTS ARE NOT SATISFACTORY, MAKE ADJUSTMENTS, REPLACEMENTS, AND CHANGES AS NEEDED. THEN REPEAT THE TESTS, AND MAKE ADDITIONAL TESTS, AS THE ARCHITECT/ENGINEER OR AUTHORITY HAVING JURISDICTION DEEMS NECESSARY.

B. GROUND RESISTANCE:
1. CONDUCT SERVICE GROUND RESISTANCE TESTS USING AN APPROVED MANUFACTURED GROUND RESISTANCE METER. SUBMIT TO THE ARCHITECT/ENGINEER A PROPOSED TEST PROCEDURE INCLUDING TYPE OF EQUIPMENT TO BE USED. (THE CONVENTIONAL OHMMETER IS NOT AN ACCEPTABLE DEVICE.)
2. MAKE GROUND RESISTANCE MEASUREMENTS DURING NORMAL DRY WEATHER AND NOT LESS THAN 48 HOURS AFTER A RAIN. GROUND RESISTANCE VALUES SHALL BE VERIFIED BY THE ARCHITECT/ENGINEER AT THE TIME THE READINGS ARE TAKEN.
3. IF THE GROUND RESISTANCE VALUE OBTAINED IS MORE THAN THE VALUE SET FORTH IN SECTION 26 05 26, THE FOLLOWING SHALL BE DONE TO OBTAIN THE VALUE GIVEN:
a. VERIFY THAT ALL CONNECTIONS IN THE SERVICE GROUND SYSTEM ARE SECURE.
b. INCREASE THE DEPTH TO WHICH GROUND RODS ARE DRIVEN BY ADDING SECTION LENGTHS TO THE RODS AND RETEST. IF THE RESISTANCE IS STILL EXCESSIVE INCREASE THE DEPTH BY ADDING AN ADDITIONAL ROD SECTION AND RETEST.
c. IF THE RESISTANCE IS STILL EXCESSIVE, FURNISH AND INSTALL ADDITIONAL GROUND RODS, SPACED NOT LESS THAN 20 FEET FROM OTHER GROUND RODS UNLESS OTHERWISE NOTED ON PLANS, AND CONNECT INTO THE GROUND ELECTRODE SYSTEM. RETEST.
d. REVIEW RESULTS WITH THE ARCHITECT/ENGINEER.
4. BEFORE FINAL PAYMENT IS MADE TO THE CONTRACTOR SUBMIT A WRITTEN REPORT TO THE ARCHITECT/ENGINEER INCLUDING THE FOLLOWING:
a. DATE OF TEST.
b. NUMBER OF HOURS SINCE THE LAST RAIN.
c. SOIL CONDITION AT THE TIME OF THE TEST IN THE GROUND ELECTRODE LOCATION. THAT IS: DRY, WET, MOIST, SAND, CLAY, ETC.
d. DIAGRAM OF THE TEST SET-UP SHOWING DISTANCES BETWEEN TEST EQUIPMENT, GROUND ELECTRODE, AUXILIARY ELECTRODES, ETC.
e. MAKE, MODEL, AND CALIBRATION DATE OF TEST EQUIPMENT.
f. TABULATION OF MEASUREMENTS TAKEN AND CALCULATIONS MADE.

C. GROUND-FAULT EQUIPMENT PERFORMANCE TESTING:
1. TEST: PERFORM GROUND-FAULT PERFORMANCE TESTING WHEN SYSTEM IS INSTALLED. THE TEST PROCESS SHALL USE PRIMARY CURRENT INJECTION PER MANUFACTURER INSTRUCTION AND PROCEDURES. PERFORM TEST FOR THE FOLLOWING:
a. SERVICE DISCONNECTS
b. SOLID STATE MOLDED CASE CIRCUIT BREAKERS AND SOLID-STATE INSULATED CASE CIRCUIT BREAKERS EQUIPPED WITH GROUND FAULT PROTECTION.
c. FUSIBLE SWITCHES WITH GROUND FAULT RELAY PROTECTION.
d. OUTSIDE BRANCH CIRCUITS AND FEEDERS.
e. CODE REQUIRED.
2. REPORT: PROVIDE COPY OF TEST RESULT REPORT WITH OPERATION AND MAINTENANCE MANUALS. PROVIDE REPORT TO AUTHORITY HAVING JURISDICTION WHEN REQUESTED.

D. ARC ENERGY REDUCTION EQUIPMENT PERFORMANCE TESTING:
1. TEST: PERFORM ARC ENERGY PROTECTION PERFORMANCE TESTING WHEN SYSTEM IS INSTALLED. THE TEST PROCESS SHALL USE PRIMARY CURRENT INJECTION OR APPROVED METHOD PER MANUFACTURER INSTRUCTIONS AND PROCEDURES. PERFORM TEST FOR THE FOLLOWING:
a. ALL ARC ENERGY REDUCTION SYSTEMS INSTALLED.
2. REPORT: PROVIDE COPY OF TEST RESULT REPORT WITH OPERATION AND MAINTENANCE MANUALS. PROVIDE REPORT TO AUTHORITY HAVING JURISDICTION WHEN REQUESTED.

E. IF ANY TEST RESULTS ARE NOT SATISFACTORY, MAKE ADJUSTMENTS, REPLACEMENTS AND CHANGES AS NEEDED AND REPEAT THE TESTS AND MAKE ADDITIONAL TESTS AS THE ARCHITECT/ENGINEER OR AUTHORITY HAVING JURISDICTION DEEM NECESSARY.

F. CONTRACTOR SHALL THERMOGRAPHIC STUDY ALL ELECTRICAL GEAR, SWITCHBOARD, PANELBOARDS, ETC. AT THE END OF CONSTRUCTION TO IDENTIFY ANY UNUSUAL CONDITIONS/HEATING WITHIN THE EQUIPMENT. COORDINATE WITH OWNER/ARCHITECT/ENGINEER TO HAVE AN OWNER/ARCHITECT/ENGINEER REPRESENTATIVE PRESENT DURING TESTING.

G. REPORT SHALL INCLUDE COLOR PRINTOUTS, IN BINDER, OF PICTURES TAKEN TO USE AS A BASELINE READING AFTER BUILDING IS OCCUPIED.

H. UPON COMPLETION OF THE PROJECT, THE CONTRACTOR SHALL PROVIDE AMPERAGE READINGS FOR ALL PANELBOARDS AND SWITCHBOARDS AND TURN THE RESULTS OVER TO THE OWNER FOR "BENCHMARK" AMPERAGES.

3.14 UTILITY REBATE

A. SUBMIT UTILITY REBATE FORMS, WHERE OFFERED AT PROJECT LOCATION, WITH REBATE ITEMS COMPLETED. REBATE MAY INCLUDE LIGHTING, LIGHTING CONTROLS, VARIABLE SPEED DRIVES, HEAT PUMPS, PACKAGE TERMINAL A/C, AIR CONDITIONERS, CHILLERS, WATER HEATERS, PROGRAMMABLE THERMOSTATS, AND MOTORS.

B. CONTRACTOR MUST SUBMIT NOTIFICATION OF ANY VALUE ENGINEERING OR PRODUCT SUBSTITUTION THAT WILL AFFECT THE UTILITY REBATE AMOUNT PRIOR TO APPROVAL.

READINESS CERTIFICATION PRIOR TO FINAL JOBSITE OBSERVATION

TO PREVENT THE FINAL JOB OBSERVATION FROM OCCURRING TOO EARLY, WE REQUIRE THAT THE CONTRACTOR REVIEW THE COMPLETION STATUS OF THE PROJECT AND, BY COPY OF THIS DOCUMENT, CERTIFY THAT THE JOB IS INDEED READY FOR THE FINAL JOB OBSERVATION. THE FOLLOWING IS A TYPICAL LIST OF ITEMS THAT REPRESENT THE DEGREE OF JOB COMPLETENESS EXPECTED PRIOR TO REQUESTING A FINAL JOB OBSERVATION.

1. PENETRATIONS OF FIRE-RATED CONSTRUCTION FIRE SEALED IN ACCORDANCE WITH SPECIFICATIONS.

2. ELECTRICAL PANELS HAVE TYPED CIRCUIT IDENTIFICATION.

3. SMOKE AND FIRE/SMOKE DAMPERS ARE WIRED AND HAVE BEEN TESTED.

4. PER SECTION 26 05 00, CABLE INSULATION TEST RESULTS HAVE BEEN SUBMITTED.

5. PER SECTION 26 05 00, MEDIUM VOLTAGE TESTING REPORT HAS BEEN SUBMITTED.

6. PER SECTION 26 05 00, GROUND RESISTANCE TEST RESULTS HAVE BEEN SUBMITTED.

7. OPERATION AND MAINTENANCE MANUALS HAVE BEEN SUBMITTED AS PER SECTION 26 05 00.

8. BOUND COPIES OF APPROVED SHOP DRAWINGS HAVE BEEN SUBMITTED AS PER SECTION 26 05 00.

9. REPORT OF INSTRUCTION OF OWNER'S REPRESENTATIVE HAS BEEN SUBMITTED AS PER SECTION 26 05 00.

10. FIRE ALARM INSPECTION AND TESTING REPORT HAS BEEN SUBMITTED AS PER SECTIONS 26 05 00 AND 28 31 00.

11. START-UP REPORTS FROM FACTORY REPRESENTATIVE HAVE BEEN SUBMITTED AS PER SECTION 26 05 00.

ACCEPTED BY:

PRIME CONTRACTOR ______________________________

BY ______________________________ DATE ________________

UPON CONTRACTOR CERTIFICATION THAT THE PROJECT IS COMPLETE AND READY FOR A FINAL JOB OBSERVATION, WE REQUIRE THE CONTRACTOR TO SIGN THIS AGREEMENT AND RETURN IT TO THE ARCHITECT/ENGINEER SO THAT THE FINAL OBSERVATION CAN BE SCHEDULED.

IT IS UNDERSTOOD THAT IF THE ARCHITECT/ENGINEER FINDS THE JOB NOT READY FOR THE FINAL OBSERVATION AND THAT ADDITIONAL TRIPS AND OBSERVATIONS ARE REQUIRED TO BRING THE PROJECT TO COMPLETION, THE COSTS INCURRED BY THE ARCHITECT/ENGINEERS FOR ADDITIONAL TIME AND EXPENSES WILL BE DEDUCTED FROM THE CONTRACTOR'S CONTRACT RETAINAGE PRIOR TO FINAL PAYMENT AT THE COMPLETION OF THE JOB.

END OF SECTION 26 05 00

SECTION 26 05 03 - THROUGH PENETRATION FIRESTOPPING

PART 4 - GENERAL

4.01 SECTION INCLUDES

A. THROUGH-PENETRATION FIRESTOPPING.

4.02 QUALITY ASSURANCE

A. MANUFACTURER: COMPANY SPECIALIZING IN MANUFACTURING PRODUCTS SPECIFIED IN THIS SECTION.

B. INSTALLER: INDIVIDUALS PERFORMING WORK SHALL BE CERTIFIED BY THE MANUFACTURER OF THE SYSTEM SELECTED FOR INSTALLATION.

4.03 REFERENCES

A. UL 263 - FIRE TESTS OF BUILDING CONSTRUCTION AND MATERIALS

B. UL 723 - SURFACE BURNING CHARACTERISTICS OF BUILDING MATERIALS

C. ANSI/UL 1479 - FIRE TESTS OF THROUGH PENETRATION FIRESTOPS

D. UL 2079 - TESTS FOR FIRE RESISTANCE OF BUILDING JOINT SYSTEMS

E. UL FIRE RESISTANCE DIRECTORY THROUGH PENETRATION FIRESTOP SYSTEMS (XHEZ)

F. INTERTEK / WARNOCK HERSEY - DIRECTORY OF LISTED PRODUCTS

G. ASTM E84 - STANDARD TEST METHOD FOR SURFACE BURNING CHARACTERISTICS OF BUILDING MATERIALS

H. ASTM E814 - STANDARD TEST METHOD FOR FIRE TESTS OF THROUGH-PENETRATION FIRESTOPS

I. 2021 INTERNATIONAL BUILDING CODE

J. NFPA 5000 - BUILDING CONSTRUCTION SAFETY CODE

K. CBC CALIFORNIA BUILDING CODE

4.04 SUBMITTALS

A. SUBMIT UNDER PROVISIONS OF SECTION 26 05 00.

B. SUBMIT FIRESTOPPING INSTALLERS CERTIFICATION FOR ALL INSTALLERS ON THE PROJECT.

C. SHOP DRAWINGS: SUBMIT FOR EACH CONDITION REQUIRING FIRESTOPPING. INCLUDE DESCRIPTIONS OF THE SPECIFIC PENETRATING ITEM, ACTUAL WALL/FLOOR CONSTRUCTION, MANUFACTURER'S INSTALLATION INSTRUCTIONS, AND UL OR INTEREK / WARNOCK HERSEY ASSEMBLY NUMBER.

D. THROUGH-PENETRATION FIRESTOP SYSTEM SCHEDULE: INDICATE LOCATIONS OF EACH THROUGH-PENETRATION FIRESTOP SYSTEM, ALONG WITH THE FOLLOWING INFORMATION:
1. TYPES OF PENETRATING ITEMS.
2. TYPES OF CONSTRUCTIONS PENETRATED, INCLUDING FIRE-RESISTANCE RATINGS AND, WHERE APPLICABLE, THICKNESSES OF CONSTRUCTION PENETRATED.
3. THROUGH-PENETRATION FIRESTOP SYSTEMS FOR EACH LOCATION IDENTIFIED BY FIRESTOP DESIGN DESIGNATION OF QUALIFIED TESTING AND INSPECTING AGENCY.
4. F RATINGS FOR EACH FIRESTOP SYSTEM.

E. MAINTAIN A NOTEBOOK ON THE JOB SITE AT ALL TIMES THAT CONTAINS COPIES OF APPROVED SUBMITTALS FOR ALL THROUGH PENETRATION FIRESTOPPING TO BE INSTALLED. NOTEBOOK SHALL BE MADE AVAILABLE TO THE AUTHORITY HAVING JURISDICTION AT THEIR REQUEST AND TURNED OVER TO THE OWNER AT THE END OF CONSTRUCTION AS PART OF THE O&M MANUALS.

F. SUBMIT VOC RATING OF FIRESTOPPING MATERIAL IN G/L (LESS WATER) WITH DOCUMENTATION THAT IT MEETS THE LIMITS SET FORTH IN SCAQMD RULE 1168.

4.05 DELIVERY, STORAGE, AND HANDLING

A. STORE, PROTECT AND HANDLE PRODUCTS ON SITE. ACCEPT MATERIAL ON SITE IN FACTORY CONTAINERS AND PACKING. INSPECT FOR DAMAGE. PROTECT FROM DETERIORATION OR DAMAGE DUE TO MOISTURE, TEMPERATURE CHANGES, CONTAMINANTS, OR OTHER CAUSES. FOLLOW MANUFACTURER'S INSTRUCTIONS FOR STORAGE.

B. INSTALL MATERIAL PRIOR TO EXPIRATION OF PRODUCT SHELF LIFE.

4.06 PERFORMANCE REQUIREMENTS

A. GENERAL: FOR PENETRATIONS THROUGH THE FOLLOWING FIRE-RESISTANCE-RATED CONSTRUCTIONS, INCLUDING BOTH EMPTY OPENINGS AND OPENINGS CONTAINING PENETRATING ITEMS, PROVIDE THROUGH-PENETRATION FIRESTOP SYSTEMS THAT ARE PRODUCED AND INSTALLED TO RESIST SPREAD OF FIRE ACCORDING TO REQUIREMENTS INDICATED, RESIST PASSAGE OF SMOKE AND OTHER GASES, AND MAINTAIN ORIGINAL FIRE-RESISTANCE RATING OF CONSTRUCTION PENETRATED.
1. FIRE-RESISTANCE-RATED WALLS INCLUDING FIRE PARTITIONS, FIRE BARRIERS, AND SMOKE BARRIERS.
2. FIRE-RESISTANCE-RATED HORIZONTAL ASSEMBLIES INCLUDING FLOORS, FLOOR/CEILING ASSEMBLIES, AND CEILING MEMBRANES OF ROOF/CEILING ASSEMBLIES.

B. RATED SYSTEMS: PROVIDE THROUGH-PENETRATION FIRESTOP SYSTEMS WITH THE FOLLOWING RATINGS DETERMINED PER UL 1479:
1. F-RATED SYSTEMS: PROVIDE THROUGH-PENETRATION FIRESTOP SYSTEMS WITH F-RATINGS INDICATED, BUT NOT LESS THAN THAT EQUALING OR EXCEEDING FIRE-RESISTANCE RATING OF CONSTRUCTIONS PENETRATED.
2. L-RATED SYSTEMS: PROVIDE THROUGH-PENETRATION FIRESTOP SYSTEMS WITH L-RATINGS OF NOT MORE THAN 5.0 CFM/SQ. FT. AT BOTH AMBIENT TEMPERATURE AND 400F.

C. FOR THROUGH-PENETRATION FIRESTOP SYSTEMS EXPOSED TO LIGHT, TRAFFIC, MOISTURE, OR PHYSICAL DAMAGE, PROVIDE PRODUCTS THAT, AFTER CURING, DO NOT DETERIORATE WHEN EXPOSED TO THESE CONDITIONS BOTH DURING AND AFTER CONSTRUCTION.

D. FOR THROUGH-PENETRATION FIRESTOP SYSTEMS EXPOSED TO VIEW, PROVIDE PRODUCTS WITH FLAME-SPREAD AND SMOKE-DEVELOPED INDEXES OF LESS THAN 25 AND 450, RESPECTIVELY, AS DETERMINED PER ASTM E 84.

E. FOR THROUGH-PENETRATION FIRESTOP SYSTEMS IN AIR PLENUMS, PROVIDE PRODUCTS WITH FLAME-SPREAD AND SMOKE-DEVELOPED INDEXES OF LESS THAN 25 AND 50, RESPECTIVELY, AS DETERMINED PER ASTM E 84.
1. CDPH STANDARD METHOD V1.1-2010 - STANDARD METHOD FOR THE TESTING AND EVALUATION OF VOLATILE ORGANIC CHEMICAL EMISSIONS VOC FROM INDOOR SOURCES USING ENVIRONMENTAL CHAMBERS VERSION 1.1.
2. SOUTH COAST AIR QUALITY MANAGEMENT DISTRICT RULE 1168 - ADHESIVE AND SEALANT APPLICATIONS. ALL ADHESIVES AND SEALANTS WET-APPLIED ON SITE SHALL COMPLY WITH THE APPLICABLE CHEMICAL CONTENT REQUIREMENTS OF SCAQMD RULE 1168.
3. SOUTH COAST AIR QUALITY MANAGEMENT DISTRICT RULE SCAQMD 1113 - WET APPLIED PAINTS AND COATINGS. ALL PAINTS AND COATINGS WET-APPLIED ON SITE MUST MEET THE APPLICABLE VOC LIMITS OF SCAQMD RULE 1113.

4.07 MEETINGS

A. PRE-INSTALLATION MEETING: A PRE-INSTALLATION MEETING SHALL BE SCHEDULED AND SHALL INCLUDE THE CONSTRUCTION MANAGER, GENERAL CONTRACTOR, ALL SUBCONTRACTORS ASSOCIATED WITH THE INSTALLATION OF SYSTEMS PENETRATING FIRE BARRIERS, FIRESTOPPING MANUFACTURER'S REPRESENTATIVE, AND THE OWNER.
1. REVIEW FORESEEABLE METHODS RELATED TO FIRESTOPPING WORK.
2. TOUR REPRESENTATIVE AREAS WHERE FIRESTOPPING IS TO BE INSTALLED; INSPECT AND DISCUSS EACH TYPE OF CONDITION AND EACH TYPE OF SUBSTRATE THAT WILL BE ENCOUNTERED, AND PREPARATION TO BE PERFORMED BY OTHER TRADES.

4.08 WARRANTY

A. PROVIDE ONE YEAR WARRANTY ON PARTS AND LABOR.

B. WARRANTY SHALL COVER REPAIR OR REPLACEMENT OF FIRESTOP SYSTEMS WHICH FAIL IN JOINT ADHESION, COHESION, ABRASION RESISTANCE, WEATHER RESISTANCE, EXTRUSION RESISTANCE, MIGRATION RESISTANCE, STAIN RESISTANCE, GENERAL DURABILITY, OR APPEAR TO DETERIORATE IN ANY MANNER NOT CLEARLY SPECIFIED BY THE MANUFACTURER AS AN INHERENT QUALITY OF THE MATERIAL.

PART 5 - PRODUCTS

5.01 MANUFACTURERS

A. PRODUCTS: SUBJECT TO COMPLIANCE WITH REQUIREMENTS, PROVIDE ONE OF THE THROUGH-PENETRATION FIRESTOP SYSTEMS INDICATED FOR EACH APPLICATION THAT ARE PRODUCED BY ONE OF THE FOLLOWING MANUFACTURERS. ALL FIRESTOPPING SYSTEMS INSTALLED SHALL BE PROVIDED BY A SINGLE MANUFACTURER.
1. 3M; FIRE PROTECTION PRODUCTS DIVISION
2. HILTI, INC.

5.02 THROUGH PENETRATION FIRESTOP SYSTEMS

A. PROVIDE MATERIALS AND SYSTEMS CLASSIFIED BY OR LISTED BY INTERTEK / WARNOCK HERSEY TO PROVIDE FIRESTOPPING EQUAL TO TIME RATING OF CONSTRUCTION BEING PENETRATED.

B. ALL FIRESTOPPING MATERIALS SHALL BE FREE OF ASBESTOS, LEAD, PCB'S, AND OTHER MATERIALS THAT WOULD REQUIRE HAZARDOUS WASTE REMOVAL.

C. FIRESTOPPING SHALL BE FLEXIBLE TO ALLOW FOR NORMAL PENETRATING ITEM MOVEMENT DUE TO EXPANSION AND CONTRACTION.

D. PROVIDE FIRESTOPPING SYSTEMS CAPABLE OF SUPPORTING FLOOR LOADS WHERE SYSTEMS ARE EXPOSED TO POSSIBLE FLOOR LOADING OR TRAFFIC.

E. PROVIDE FIRESTOPPING SYSTEMS ALLOWING CONTINUOUS INSULATION FOR ALL INSULATED PIPES.

PENETRATING ITEM	UL SYSTEM NO.
NO PENETRATING ITEM	FC 0000-0999*
METALLIC PIPE OR CONDUIT	FC 1000-1999
NON-METALLIC PIPE OR CONDUIT	FC 2000-2999
ELECTRICAL CABLES	FC 3000-3999
CABLE TRAYS	FC 4000-4999
INSULATED PIPES	FC 5000-5999
BUS DUCT AND MISC. ELECTRICAL	FC 6000-6999
DUCT WITHOUT DAMPER AND MISC. MECHANICAL	FC 7000-7999
MULTIPLE PENETRATIONS	FC 8000-8999

*ALTERNATE METHOD OF FIRESTOPPING IS PATCHING OPENING TO MATCH ORIGINAL RATED CONSTRUCTION.

PENETRATING ITEM	UL SYSTEM NO.
NO PENETRATING ITEM	WL 0000-0999*
METALLIC PIPE OR CONDUIT	WL 1000-1999
NON-METALLIC PIPE OR CONDUIT	WL 2000-2999
ELECTRICAL CABLES	WL 3000-3999
CABLE TRAYS	WL 4000-4999
INSULATED PIPES	WL 5000-5999
BUS DUCT AND MISC. ELECTRICAL	WL 6000-6999
DUCT WITHOUT DAMPER AND MISC. MECHANICAL	WL 7000-7999
MULTIPLE PENETRATIONS	WL 8000-8999

*ALTERNATE METHOD OF FIRESTOPPING IS PATCHING OPENING TO MATCH ORIGINAL RATED CONSTRUCTION.

F. ANY OPENING IN WALLS OR FLOORS NOT COVERED BY THE LISTED SERIES OF NUMBERS SHALL BE COORDINATED WITH THE FIRESTOPPING MANUFACTURER.

G. ANY OPENINGS IN FLOORS OR WALLS NOT DESCRIBED IN THE UL OR LISTED BY INTERTEK / WARNOCK HERSEY FIRE RESISTANCE DIRECTORY, OR OUTLINED IN MANUFACTURER'S INFORMATION SHALL BE SEALED IN A MANNER AGREED UPON BY THE FIRESTOPPING MANUFACTURER, OWNER, AND THE AUTHORITY HAVING JURISDICTION.

PART 6 - EXECUTION

6.01 EXAMINATION

A. ENSURE ALL SURFACES THAT CONTACT SEAL MATERIALS ARE FREE OF DIRT, DUST, GREASE, OIL, RUST, OR LOOSE MATERIALS. CLEAN AND REPAIR SURFACES AS REQUIRED. REMOVE LAITANCE AND FORM-RELEASE AGENTS FROM CONCRETE.

LPA
ARCHITECTURE ENGINEERING INTERIOR DESIGN
LANDSCAPE ARCHITECTURE PLANNING
949-261-1001 Office
LPADesignStudios.com
5301 California Avenue, Suite 100
Irvine, California 92617

REGISTERED PROFESSIONAL ENGINEER
NESTOR C. IGNACIO, JR.
Lic. E16934
Exp. 6-30-2027
ELECTRICAL
STATE OF CALIFORNIA

IMEG
www.imegcorp.com
300 NORTH LAKE AVENUE
12TH FLOOR
PASADENA, CA 91101
P: 626.463.2800 F: 626.463.2801
PROJECT #25007252.00

This document and all other project documents, ideas, aesthetics and designs incorporated therein are instruments of service. All project documents are copyright protected, are the property of LPA, Inc. (LPA) and cannot be lawfully used in whole or in part for any project or purpose except as set forth in the contractual agreement between LPA and its Client. The unauthorized disclosure and/or use of the project documents (including the creation of derivative works), may give rise to liability for copyright infringement, unlawful disclosure, use or misappropriation of property rights held by LPA. The unauthorized use of the project documents will give rise to the recovery of monetary losses and damages including attorney fees and costs for which the unauthorized user will be held liable.
Project documents describe the design intent of the work and are not a representation of as-built or existing conditions. LPA is not responsible for any discrepancies between the project documents and the existing conditions.

© LPA, Inc.

ALTADENA ELEMENTARY SCHOOL

743 E Calaveras St,
Altadena, CA 91001

ALTADENA ELEMENTARY SCHOOL

Revision	Date
Addendum 1	04/17/2026

Submittal	Date
100% SCHEMATIC DESIGN	12/05/2025
DSA SUBMITTAL	02/02/2026
DSA SUBMITTAL V2	03/13/2026

33366
Checker

E401

ELECTRICAL SPECIFICATIONS

B. ENSURE SUBSTRATE AND PENETRATING ITEMS HAVE BEEN PERMANENTLY INSTALLED PRIOR TO INSTALLING FIRESTOPPING SYSTEMS. ENSURE PENETRATING ITEMS HAVE BEEN PROPERLY SPACED AND HAVE PROPER CLEARANCE PRIOR TO INSTALLING FIRESTOPPING SYSTEMS.

C. SURFACES TO WHICH SEALING MATERIALS ARE TO BE INSTALLED MUST MEET THE SELECTED UL OR INTERTEK / WARNOCK HERSEY SYSTEM SUBSTRATE CRITERIA.

D. PRIME SUBSTRATES WHERE RECOMMENDED IN WRITING BY THROUGH-PENETRATION FIRESTOP SYSTEM MANUFACTURER. CONFINE PRIMER TO AREA OF BOND.

6.02 INSTALLATION

A. IN EXISTING CONSTRUCTION, PROVIDE FIRESTOPPING OF OPENINGS PRIOR TO AND AFTER INSTALLATION OF PENETRATING ITEMS. REMOVE ANY EXISTING COATINGS ON SURFACES PRIOR TO FIRESTOPPING INSTALLATION. TEMPORARY FIRESTOPPING SHALL CONSIST OF PACKING OPENINGS WITH FIRE RESISTANT MINERAL WOOL FOR THE FULL THICKNESS OF SUBSTRATE, OR AN ALTERNATE METHOD APPROVED BY THE AUTHORITY HAVING JURISDICTION. ALL OPENINGS SHALL BE TEMPORARILY FIRESTOPPED IMMEDIATELY UPON THEIR INSTALLATION AND SHALL REMAIN SO UNTIL THE PERMANENT UL OR LISTED BY INTERTEK / WARNOCK HERSEY LISTED FIRESTOPPING SYSTEM IS INSTALLED.

B. INSTALL PENETRATION SEAL MATERIALS IN ACCORDANCE WITH PRINTED INSTRUCTIONS OF THE UL OR INTERTEK / WARNOCK HERSEY FIRE RESISTANCE DIRECTORY AND WITH THE MANUFACTURER'S PRINTED APPLICATION INSTRUCTIONS.

C. INSTALL DAMS AS REQUIRED TO PROPERLY CONTAIN FIRESTOPPING MATERIALS WITHIN OPENINGS AND AS REQUIRED TO ACHIEVE REQUIRED FIRE RESISTANCE RATING. REMOVE COMBUSTIBLE DAMMING AFTER APPROPRIATE CURING.

6.03 CLEANING AND PROTECTING

A. CLEAN EXCESS FILL MATERIALS ADJACENT TO OPENINGS AS WORK PROGRESSES BY METHODS AND WITH CLEANING MATERIALS THAT ARE APPROVED IN WRITING BY THROUGH-PENETRATION FIRESTOP SYSTEM MANUFACTURERS AND THAT DO NOT CAUSE DAMAGE.

B. PROVIDE FINAL PROTECTION AND MAINTAIN CONDITIONS DURING AND AFTER INSTALLATION THAT ENSURE THAT THROUGH-PENETRATION FIRESTOP SYSTEMS ARE WITHOUT DAMAGE OR DETERIORATION AT TIME OF SUBSTANTIAL COMPLETION. IF, DESPITE SUCH PROTECTION, DAMAGE OR DETERIORATION OCCURS, REMOVE DAMAGED OR DETERIORATED THROUGH-PENETRATION FIRESTOP SYSTEMS IMMEDIATELY AND INSTALL NEW MATERIALS TO PRODUCE SYSTEMS COMPLYING WITH SPECIFIED REQUIREMENTS.

6.04 INSPECTION

A. ALL PENETRATIONS SHALL BE INSPECTED BY THE MANUFACTURER'S REPRESENTATIVE TO ENSURE PROPER INSTALLATION.

B. ACCESS TO FIRESTOP SYSTEMS SHALL BE MAINTAINED FOR EXAMINATION BY THE AUTHORITY HAVING JURISDICTION AT THEIR REQUEST.

C. PROCEED WITH ENCLOSING THROUGH-PENETRATION FIRESTOP SYSTEM WITH OTHER CONSTRUCTION ONLY AFTER INSPECTION REPORTS ARE ISSUED AND FIRESTOP INSTALLATIONS COMPLY WITH REQUIREMENTS.

D. THE CONTRACTOR SHALL ALLOW FOR VISUAL DESTRUCTIVE REVIEW OF 5% OF INSTALLED FIRESTOP SYSTEMS (MINIMUM OF ONE) TO PROVE COMPLIANCE WITH SPECIFICATIONS AND MANUFACTURER'S INSTRUCTIONS AND DETAILS. DESTRUCTIVE SYSTEM REMOVAL SHALL BE PERFORMED BY THE CONTRACTOR AND WITNESSED BY THE ARCHITECT/ENGINEER AND MANUFACTURER'S FACTORY REPRESENTATIVE. THE ARCHITECT/ENGINEER SHALL HAVE SOLE DISCRETION OF WHICH FIRESTOP SYSTEM INSTALLATIONS WILL BE REVIEWED. THE CONTRACTOR IS RESPONSIBLE FOR ALL COSTS ASSOCIATED WITH THIS REQUIREMENT INCLUDING LABOR AND MATERIAL FOR REMOVING AND REPLACING THE INSTALLED FIRESTOP SYSTEM. IF ANY FIRESTOP SYSTEM IS FOUND TO NOT BE INSTALLED PER MANUFACTURER'S SPECIFIC INSTRUCTIONS AND DETAILS, ALL FIRESTOP SYSTEMS ARE SUBJECT TO DESTRUCTIVE REVIEW AND REPLACEMENT AT THE ARCHITECT/ENGINEER'S DISCRETION AND THE CONTRACTOR'S EXPENSE.

END OF SECTION 26 05 03

SECTION 26 05 13 - WIRE AND CABLE

PART 7 - GENERAL

7.01 SECTION INCLUDES

A. BUILDING WIRE

B. CABLING FOR REMOTE CONTROL, SIGNAL, AND POWER LIMITED CIRCUITS

7.02 RELATED WORK

A. SECTION 26 05 53 - ELECTRICAL IDENTIFICATION: REFER TO ELECTRICAL IDENTIFICATION FOR COLOR AND IDENTIFICATION LABELING REQUIREMENTS.

7.03 REFERENCES

A. ASTM B801-07 - STANDARD SPECIFICATION FOR CONCENTRIC-LAY-STRANDED CONDUCTORS OF 8000 SERIES ALUMINUM ALLOY FOR SUBSEQUENT COVERING OR INSULATION

B. NEMA WC 70 - POWER CABLES RATED 2,000V OR LESS FOR THE DISTRIBUTION OF ELECTRICAL ENERGY

C. NFPA 70 - NATIONAL ELECTRICAL CODE (NEC)

D. CEC CALIFORNIA ELECTRICAL CODE

E. UL 44 - THERMOSET-INSULATED WIRES AND CABLES

F. UL 83 - THERMOPLASTIC-INSULATED WIRES AND CABLES

G. UL 854 - SERVICE-ENTRANCE CABLES

H. UL 1581 - STANDARD FOR ELECTRICAL WIRES, CABLES, AND FLEXIBLE CORDS

I. UL 2196 - FIRE RESISTIVE, FIRE RESISTANT AND CIRCUIT INTEGRITY CABLES

PART 8 - PRODUCTS

8.01 BUILDING WIRE

A. FEEDERS AND BRANCH CIRCUITS 8 AWG AND LARGER: COPPER, STRANDED CONDUCTOR, 600-VOLT INSULATION, THHN/THWN OR XHHW-2.

B. FEEDERS AND BRANCH CIRCUITS 8 AWG AND LARGER IN UNDERGROUND CONDUIT: COPPER, STRANDED CONDUCTOR, 600-VOLT INSULATION, THWN.

C. FEEDERS AND BRANCH CIRCUITS 10 AWG AND SMALLER: COPPER, SOLID OR STRANDED CONDUCTOR, 600-VOLT INSULATION, THHN/THWN, UNLESS OTHERWISE NOTED ON THE DRAWINGS.

D. CONTROL CIRCUITS: COPPER, STRANDED CONDUCTOR 600-VOLT INSULATION, THHN/THWN.

E. ALUMINUM CONDUCTORS ARE NOT TO BE USED FOR FEEDS TO MOTOR LOADS.

F. EACH 120 AND 277-VOLT BRANCH CIRCUIT SHALL HAVE A DEDICATED NEUTRAL CONDUCTOR. NEUTRAL CONDUCTORS SHALL BE CONSIDERED CURRENT-CARRYING CONDUCTORS FOR WIRE DERATING.

PART 9 - EXECUTION

9.01 WIRE AND CABLE INSTALLATION SCHEDULE

A. ABOVE ACCESSIBLE CEILINGS:

1. BUILDING WIRE SHALL BE INSTALLED IN RACEWAY.

B. ALL OTHER LOCATIONS: BUILDING WIRE IN RACEWAY.

C. ABOVE GRADE: ALL CONDUCTORS INSTALLED ABOVE GRADE SHALL BE TYPE "THHN".

D. UNDERGROUND OR IN SLAB: ALL CONDUCTORS SHALL BE TYPE "THWN".

9.02 CONTRACTOR CHANGES

A. THE BASIS OF DESIGN IS COPPER CONDUCTORS INSTALLED IN RACEWAY BASED ON AMBIENT TEMPERATURE OF 30°C, CEC CALIFORNIA ELECTRICAL CODE EDITION TABLE 310.15(B)(16). SERVICE ENTRANCE CONDUCTORS ARE BASED ON COPPER CONDUCTOR INSTALLED IN UNDERGROUND ELECTRICAL DUCTS, CEC CALIFORNIA ELECTRICAL CODE TABLE B310.15(B)(2)(7).

B. THE CONTRACTOR SHALL BE RESPONSIBLE FOR DERATING AND SIZING CONDUCTORS AND CONDUITS TO EQUAL OR EXCEED THE AMPACITY OF THE BASIS OF DESIGN CIRCUITS, IF THEY CHOOSE TO USE METHODS OR MATERIALS OTHER THAN THE BASIS OF DESIGN.

C. UNDERGROUND ELECTRICAL DUCT AMPACITY RATING SHALL BE IN ACCORDANCE WITH NEC TABLE 310.16 (2011 - 2017 EDITION 310.15(B)(16)) OR CALCULATED IN ACCORDANCE WITH ANNEX B APPLICATION INFORMATION FOR AMPACITY CALCULATION PER CEC CALIFORNIA ELECTRICAL CODE TABLE B310.15(B)(2)(7). THE CALCULATIONS AND A SKETCH OF THE PROPOSED INSTALLATION SHALL BE SUBMITTED PRIOR TO ANY CONDUIT BEING INSTALLED.

D. CONDUCTOR LENGTH(S) LISTED ON PLANS AND SCHEDULES. THE DRAWINGS ARE DIAGRAMMATIC WITH INTENT TO CONVEY THE COMPONENTS OF THE ELECTRICAL DISTRIBUTION SYSTEM. CONDUCTOR LENGTH(S) WHEN LISTED ON PLANS AND SCHEDULES ARE FOR ENGINEERING CALCULATION PURPOSES. CONDUCTOR LENGTH(S) SHALL NOT BE USED FOR BIDDING PURPOSES.

E. RECORD DRAWING SHALL INCLUDE THE CALCULATIONS AND SKETCHES.

9.03 GENERAL WIRING METHODS

A. USE NO WIRE SMALLER THAN 12 AWG FOR POWER AND LIGHTING CIRCUITS, AND NO SMALLER THAN 14 AWG FOR CONTROL WIRING.

B. USE NO WIRE SMALLER THAN 18 AWG FOR LOW VOLTAGE CONTROL WIRING BELOW 100 VOLTS.

C. USE 10 AWG CONDUCTOR FOR 20 AMPERE, 120-VOLT BRANCH CIRCUIT HOME RUNS LONGER THAN 75 FEET, AND FOR 20 AMPERE, 277-VOLT BRANCH CIRCUIT HOME RUNS LONGER THAN 200 FEET.

D. USE NO WIRE SMALLER THAN 8 AWG FOR OUTDOOR LIGHTING CIRCUITS.

E. THE AMPACITY OF MULTIPLE CONDUCTORS IN ONE CONDUIT SHALL BE DERATED PER THE ELECTRICAL CODE. IN NO CASE SHALL MORE THAN 4 CONDUCTORS BE INSTALLED IN ONE CONDUIT TO SUCH LOADS AS MOTORS LARGER THAN 1/4 HP, PANELBOARDS, MOTOR CONTROL CENTERS, ETC.

F. WHERE INSTALLING PARALLEL FEEDERS, PLACE AN EQUAL NUMBER OF CONDUCTORS FOR EACH PHASE OF A CIRCUIT IN SAME RACEWAY OR CABLE.

G. SPLICE ONLY IN JUNCTION OR OUTLET BOXES.

H. NEATLY TRAIN AND LACE WIRING INSIDE BOXES, EQUIPMENT, AND PANELBOARDS.

I. MAKE CONDUCTOR LENGTHS FOR PARALLEL CIRCUITS EQUAL.

J. ALL CONDUCTORS SHALL BE CONTINUOUS IN CONDUIT FROM LAST OUTLET TO THEIR TERMINATION.

K. TERMINATE ALL SPARE CONDUCTORS ON TERMINAL BLOCKS, AND LABEL THE SPARE CONDUCTORS.

L. CABLES OR WIRES SHALL NOT BE LAID OUT ON THE GROUND BEFORE PULLING.

M. CABLES OR WIRES SHALL NOT BE DRAGGED OVER EARTH OR PAVING.

N. CARE SHALL BE TAKEN SO AS NOT TO SUBJECT THE CABLE OR WIRE TO HIGH MECHANICAL STRESSES THAT WOULD CAUSE DAMAGE TO THE WIRE AND CABLE.

O. AT LEAST SIX (6)-INCH LOOPS OR ENDS SHALL BE LEFT AT EACH OUTLET FOR INSTALLATION CONNECTION OF LUMINAIRES OR OTHER DEVICES.

P. ALL WIRES IN OUTLET BOXES NOT CONNECTED TO FIXTURES OR OTHER DEVICES SHALL BE ROLLED UP, SPLICED IF CONTINUITY OF CIRCUIT IS REQUIRED, AND INSULATED.

9.04 WIRING INSTALLATION IN RACEWAYS

A. PULL ALL CONDUCTORS INTO A RACEWAY AT THE SAME TIME. USE UL LISTED WIRE PULLING LUBRICANT FOR PULLING 4 AWG AND LARGER WIRES. DO NOT USE WIRE PULLING LUBRICANT FOR ISOLATED (UNGROUNDED) POWER SYSTEM WIRING.

B. INSTALL WIRE IN RACEWAY AFTER INTERIOR OF BUILDING HAS BEEN PHYSICALLY PROTECTED FROM THE WEATHER AND ALL MECHANICAL WORK LIKELY TO INJURE CONDUCTORS HAS BEEN COMPLETED.

C. PULLING SHALL BE CONTINUOUS WITHOUT UNNECESSARY STOPS AND STARTS WITH WIRE OR CABLE ONLY PARTIALLY THROUGH RACEWAY.

D. WHERE REELS OF CABLE OR WIRE ARE USED, THEY SHALL BE SET UP ON JACKS CLOSE TO THE POINT WHERE THE WIRE OR CABLE ENTERS THE CONDUIT OR DUCT SO THAT THE CABLE OR WIRE MAY BE UNREELED AND RUN INTO THE CONDUIT OR DUCT WITH A MINIMUM OF CHANGE IN THE DIRECTION OF THE BEND.

E. CONDUCTORS SHALL NOT BE PULLED THROUGH CONDUITS UNTIL PLASTERING OR MASONRY WORK IS COMPLETED AND CONDUITS ARE FREE FROM MOISTURE. CARE SHALL BE TAKEN SO THAT LONG PULLS OF WIRE OR PULLS AROUND SEVERAL BENDS ARE NOT MADE WHERE THE WIRE MAY BE PERMANENTLY STRETCHED AND THE INSULATION DAMAGED.

F. ONLY NYLON ROPE SHALL BE PERMITTED TO PULL CABLES INTO CONDUIT AND DUCTS.

G. COMPLETELY AND THOROUGHLY SWAB RACEWAY SYSTEM BEFORE INSTALLING CONDUCTORS.

H. CONDUCTOR SUPPORTS IN VERTICAL RACEWAYS:

1. SUPPORT CONDUCTORS IN VERTICAL RACEWAYS IN ACCORDANCE WITH THE ELECTRICAL CODE SPACING OF CONDUCTORS SUPPORTS.

2. SUPPORTS SHALL BE OF INSULATED WEDGE TYPE (OZ GEDNEY TYPE S, OR EQUAL) AND INSTALLED IN A TAPERED INSULATED BUSHING FITTING OR A METAL WOVEN MESH WITH A SUPPORT RING THAT FITS INSIDE CONDUIT FITTING INSTALLED IN AN ACCESSIBLE JUNCTION BOX (HUBBELL KELLEMS SUPPORT GRIP OR EQUAL).

9.05 CABLE INSTALLATION

A. PROVIDE PROTECTION FOR EXPOSED CABLES WHERE SUBJECT TO DAMAGE.

B. USE SUITABLE CABLE FITTINGS AND CONNECTORS.

C. RUN ALL OPEN CABLE PARALLEL OR PERPENDICULAR TO WALLS, CEILINGS, AND EXPOSED STRUCTURAL MEMBERS. FOLLOW THE ROUTING AS ILLUSTRATED ON THE DRAWINGS AS CLOSELY AS POSSIBLE. CABLE ROUTING ON DRAWINGS SCALED 1/4"=1'-0" OR LESS SHALL BE CONSIDERED DIAGRAMMATICAL, UNLESS NOTED OTHERWISE. THE CORRECT ROUTING, WHEN SHOWN DIAGRAMMATICALLY, SHALL BE CHOSEN BY THE CONTRACTOR BASED ON INFORMATION IN THE CONTRACT DOCUMENTS; IN ACCORDANCE WITH THE MANUFACTURER'S WRITTEN INSTRUCTIONS, APPLICABLE CODES, THE NECA'S "STANDARD OF INSTALLATION", RECOGNIZED INDUSTRY STANDARDS; AND COORDINATED WITH OTHER CONTRACTORS.

D. OPEN CABLE SHALL BE SUPPORTED BY THE APPROPRIATE SIZE J-HOOKS OR OTHER MEANS IF CALLED FOR ON THE DRAWINGS. WIRE AND CABLE FROM DIFFERENT SYSTEMS SHALL NOT BE INSTALLED IN THE SAME J-HOOK. J-HOOKS SHALL BE SIZED WITH 20% SPARE CAPACITY. J-HOOKS SHALL PROVIDE PROPER BEND RADIUS SUPPORT FOR DATA CABLE AND FIBER CABLES.

E. OPEN CABLE INSTALLED ABOVE SUSPENDED CEILINGS SHALL NOT REST ON THE SUSPENDED CEILING CONSTRUCTION, NOR UTILIZE THE CEILING SUPPORT SYSTEM FOR WIRE AND CABLE SUPPORT.

F. J-HOOK SUPPORT SPANS SHALL BE BASED ON THE SMALLER OF THE MANUFACTURER'S LOAD RATINGS AND CODE REQUIREMENTS. IN NO CASE SHALL HORIZONTAL SPANS EXCEED 5 FEET AND VERTICAL SPANS EXCEED 4 FEET. ALL J-HOOKS SHALL BE INSTALLED WHERE COMPLETELY ACCESSIBLE AND NOT BLOCKED BY PIPING, DUCTWORK, INACCESSIBLE CEILINGS, ETC. J-HOOKS SHALL BE INDEPENDENTLY RIGIDLY ATTACHED TO A STRUCTURAL ELEMENT. J-HOOKS SHALL BE INSTALLED TO PROVIDE 2" HORIZONTAL SEPARATION AND 6" VERTICAL SEPARATION BETWEEN SYSTEMS.

G. OPEN CABLE SHALL ONLY BE INSTALLED WHERE SPECIFICALLY SHOWN ON THE DRAWINGS, OR PERMITTED IN THESE SPECIFICATIONS.

9.06 WIRING CONNECTIONS AND TERMINATIONS

A. SPLICE AND TAP ONLY IN ACCESSIBLE JUNCTION BOXES.

B. USE SOLDERLESS, TIN-PLATED COPPER, COMPRESSION TERMINALS (LUGS) APPLIED WITH CIRCUMFERENTIAL CRIMP FOR CONDUCTOR TERMINATIONS, 8 AWG AND LARGER.

C. USE SOLDERLESS, TIN-PLATED, COMPRESSION TERMINALS (LUGS) APPLIED WITH INDENTER CRIMP FOR COPPER-CONDUCTOR TERMINATIONS, 10 AWG AND SMALLER.

D. USE SOLDERLESS PRESSURE CONNECTORS WITH INSULATING COVERS FOR COPPER WIRE SPLICES AND TAPS, 8 AWG AND SMALLER. FOR 10 AWG AND SMALLER, USE INSULATED SPRING WIRE CONNECTORS WITH PLASTIC CAPS.

E. USE COMPRESSION CONNECTORS APPLIED WITH CIRCUMFERENTIAL CRIMP FOR CONDUCTOR SPLICES AND TAPS, 6 AWG AND LARGER. TAPE UNINSULATED CONDUCTORS AND CONNECTORS WITH ELECTRICAL TAPE TO 150 PERCENT OF THE INSULATION VALUE OF CONDUCTOR.

F. THOROUGHLY CLEAN WIRES BEFORE INSTALLING LUGS AND CONNECTORS.

G. MAKE SPLICES, TAPS AND TERMINATIONS TO CARRY FULL AMPACITY OF CONDUCTORS WITHOUT PERCEPTIBLE TEMPERATURE RISE.

H. PHASE SEQUENCE: ALL APPARATUS SHALL BE CONNECTED TO OPERATE IN THE PHASE SEQUENCE A-B-C REPRESENTING THE TIME SEQUENCE IN WHICH THE PHASE CONDUCTORS SO IDENTIFIED REACH POSITIVE MAXIMUM VOLTAGE.

I. AS A GENERAL RULE, APPLICABLE TO SWITCHES, CIRCUIT BREAKERS, STARTERS, PANELBOARDS, SWITCHGEAR AND THE LIKE, THE CONNECTIONS TO PHASE CONDUCTORS ARE INTENDED THUS:

1. FACING THE FRONT AND OPERATING SIDE OF THE EQUIPMENT, THE PHASE IDENTIFICATION SHALL BE:

a. LEFT TO RIGHT - A-B-C

b. TOP TO BOTTOM - A-B-C

J. CONNECTION REVISIONS AS REQUIRED TO ACHIEVE CORRECT ROTATION OF MOTORS SHALL BE MADE AT THE LOAD TERMINALS OF THE STARTERS OR DISCONNECT SWITCHES.

K. USE ANTIOXIDANT JOINT COMPOUND ON ALL ALUMINUM CONDUCTOR TERMINATIONS. APPLY ANTIOXIDANT JOINT COMPOUND PER MANUFACTURER'S RECOMMENDATIONS.

9.07 FIELD QUALITY CONTROL

A. FIELD INSPECTION AND TESTING WILL BE PERFORMED UNDER PROVISIONS OF DIVISION 1.

B. BUILDING WIRE AND POWER CABLE TESTING: PERFORM AN INSULATION-RESISTANCE TEST ON EACH CONDUCTOR WITH RESPECT TO GROUND AND ADJACENT CONDUCTORS. TEST SHALL BE MADE BY MEANS OF A LOW-RESISTANCE OHMMETER, SUCH AS A "MEGGER". THE APPLIED POTENTIAL SHALL BE 500 VOLTS DC FOR 300 VOLT RATED CABLE AND 1000 VOLTS DC FOR 600 VOLT RATED CABLE. THE TEST DURATION SHALL BE ONE MINUTE. INSULATION RESISTANCE MUST BE GREATER THAN 100 MEGA-OHM FOR 600 VOLT AND 25 MEGA-OHM FOR 300 VOLT RATED CABLES PER NETA ACCEPTANCE TESTING STANDARD. VERIFY UNIFORM RESISTANCE OF PARALLEL CONDUCTORS.

C. INSPECT WIRE AND CABLE FOR PHYSICAL DAMAGE AND PROPER CONNECTION.

D. TORQUE TEST CONDUCTOR CONNECTIONS AND TERMINATIONS TO MANUFACTURER'S RECOMMENDED VALUES.

E. PERFORM CONTINUITY TEST ON ALL POWER AND EQUIPMENT BRANCH CIRCUIT CONDUCTORS. VERIFY PROPER PHASING CONNECTIONS.

F. PROTECTION OF WIRE AND CABLE FROM FOREIGN MATERIALS:

1. IT IS THE CONTRACTOR'S RESPONSIBILITY TO PROVIDE ADEQUATE PHYSICAL PROTECTION TO PREVENT FOREIGN MATERIAL APPLICATION OR CONTACT WITH ANY WIRE OR CABLE TYPE. FOREIGN MATERIAL IS DEFINED AS ANY MATERIAL THAT WOULD NEGATIVELY IMPACT THE VALIDITY OF THE MANUFACTURER'S PERFORMANCE WARRANTY. THIS INCLUDES, BUT IS NOT LIMITED TO, OVERSPRAY OF PAINT (ACCIDENTAL OR OTHERWISE), DRYWALL COMPOUND, OR ANY OTHER SURFACE CHEMICAL, LIQUID, OR COMPOUND THAT COULD COME IN CONTACT WITH THE CABLE, CABLE JACKET, OR CABLE TERMINATION COMPONENTS.

G. OVERSPRAY OF PAINT ON ANY WIRE OR CABLE WILL NOT BE ACCEPTED. IT SHALL BE THE CONTRACTOR'S RESPONSIBILITY TO REPLACE ANY COMPONENT CONTAINING OVERSPRAY, IN ITS ENTIRETY, AT NO ADDITIONAL COST TO THE PROJECT. CLEANING OF THE CABLES WITH HARSH CHEMICALS IS NOT ALLOWED.

END OF SECTION 26 05 13

SECTION 26 05 26 - GROUNDING AND BONDING

PART 10 - GENERAL

10.01 SECTION INCLUDES

A. EQUIPMENT GROUNDING SYSTEM

B. BONDING SYSTEM

C. GROUNDING ELECTRODE SYSTEM

10.02 QUALITY ASSURANCE

A. TESTING AGENCY QUALIFICATIONS: TESTING AGENCY AS DEFINED BY OSHA IN 29 CFR 1910.7 OR A MEMBER COMPANY OF THE INTERNATIONAL ELECTRICAL TESTING ASSOCIATION AND THAT IS ACCEPTABLE TO AUTHORITIES HAVING JURISDICTION.

B. TESTING AGENCY'S FIELD SUPERVISOR: PERSON CURRENTLY CERTIFIED BY THE INTERNATIONAL ELECTRICAL TESTING ASSOCIATION TO SUPERVISE ON-SITE TESTING SPECIFIED IN PART 3.

C. ELECTRICAL COMPONENTS, DEVICES, AND ACCESSORIES: LISTED AND LABELED AS DEFINED IN ELECTRICAL CODE, ARTICLE 100, BY A TESTING AGENCY ACCEPTABLE TO AUTHORITIES HAVING JURISDICTION, AND MARKED FOR INTENDED USE.

D. COMPLY WITH UL 467 GROUNDING AND BONDING EQUIPMENT.

E. COMPLY WITH NFPA 780 AND UL 96 WHEN INTERCONNECTING WITH LIGHTNING PROTECTION SYSTEM.

F. COMPLY WITH ELECTRICAL CODE; FOR OVERHEAD-LINE CONSTRUCTION AND MEDIUM-VOLTAGE UNDERGROUND CONSTRUCTION, COMPLY WITH IEEE/ANSI C2 NATIONAL ELECTRICAL SAFETY CODE (NESC).

10.03 REFERENCES

A. NFPA 70 - NATIONAL ELECTRICAL CODE (NEC)

B. CEC CALIFORNIA ELECTRICAL CODE

10.04 SUBMITTALS

A. PRODUCT DATA: FOR THE FOLLOWING:

1. GROUND RODS.

B. PRODUCT DATA: FOR EACH TYPE OF PRODUCT INDICATED.

C. FIELD TEST REPORTS: SUBMIT WRITTEN TEST REPORTS TO INCLUDE THE FOLLOWING:

1. TEST PROCEDURES USED.

2. TEST RESULTS THAT COMPLY WITH REQUIREMENTS.

3. RESULTS OF FAILED TESTS AND CORRECTIVE ACTION TAKEN TO ACHIEVE TEST RESULTS THAT COMPLY WITH REQUIREMENTS.

D. INDICATE LAYOUT OF GROUND FIELD, LOCATION OF SYSTEM GROUNDING ELECTRODE CONNECTIONS, AND ROUTING OF GROUNDING ELECTRODE CONDUCTOR AND GROUND RING.

10.05 SUMMARY

A. THIS SECTION INCLUDES GROUNDING OF ELECTRICAL SYSTEMS AND EQUIPMENT. GROUNDING REQUIREMENTS SPECIFIED IN THIS SECTION MAY BE SUPPLEMENTED BY SPECIAL REQUIREMENTS OF SYSTEMS DESCRIBED IN OTHER SECTIONS.

PART 11 - PRODUCTS

11.01 GROUNDING CONDUCTORS

A. FOR INSULATED CONDUCTORS, COMPLY WITH DIVISION 26 SECTION 26 05 13 "WIRE AND CABLE".

B. MATERIAL: COPPER.

C. EQUIPMENT GROUNDING CONDUCTORS: INSULATED. REFER TO SECTION 26 05 53 FOR INSULATION COLOR.

D. GROUNDING ELECTRODE CONDUCTORS: STRANDED CABLE.

E. COPPER BONDING CONDUCTORS: AS FOLLOWS:

1. BONDING CONDUCTOR: NO. 4 OR NO. 6 AWG, STRANDED COPPER CONDUCTOR.

2. BONDING JUMPER: BARE COPPER TAPE, BRAIDED BARE COPPER CONDUCTORS, TERMINATED WITH COPPER FERRULES; 1-5/8 INCHES WIDE AND 1/16 INCH THICK.

11.02 CONNECTOR PRODUCTS

A. COMPLY WITH UL 467; LISTED FOR USE FOR SPECIFIC TYPES, SIZES, AND COMBINATIONS OF CONDUCTORS AND CONNECTED ITEMS.

B. CONNECTORS: HYDRAULIC COMPRESSION TYPE, IN KIT FORM, AND SELECTED PER MANUFACTURER'S WRITTEN INSTRUCTIONS.

11.03 GROUNDING ELECTRODES

A. GROUND RODS.

B. GROUND RODS: SECTIONAL TYPE; COPPER-CLAD STEEL.

1. SIZE: 3/4" IN DIAMETER BY 120 INCHES PER SECTION.

C. TEST WELLS: PROVIDE HANDHOLES AS SHOWN ON DRAWINGS OR AS SPECIFIED IN DIVISION 2 SECTION "UNDERGROUND DUCTS AND UTILITY STRUCTURES."

PART 12 - EXECUTION

12.01 CONNECTIONS

A. GENERAL: MAKE CONNECTIONS SO GALVANIC ACTION OR ELECTROLYSIS POSSIBILITY IS MINIMIZED. SELECT CONNECTORS, CONNECTION HARDWARE, CONDUCTORS, AND CONNECTION METHODS SO METALS IN DIRECT CONTACT WILL BE GALVANICALLY COMPATIBLE.

1. USE ELECTROPLATED OR HOT-TIN-COATED MATERIALS TO ENSURE HIGH CONDUCTIVITY AND TO MAKE CONTACT POINTS CLOSER TO ORDER OF GALVANIC SERIES.

2. MAKE CONNECTIONS WITH CLEAN, BARE METAL AT POINTS OF CONTACT.

3. COAT AND SEAL CONNECTIONS HAVING DISSIMILAR METALS WITH INERT MATERIAL TO PREVENT FUTURE PENETRATION OF MOISTURE TO CONTACT SURFACES.

B. COMPRESSION-TYPE CONNECTIONS: USE HYDRAULIC COMPRESSION TOOLS TO PROVIDE CORRECT CIRCUMFERENTIAL PRESSURE FOR COMPRESSION CONNECTORS. USE TOOLS AND DIES RECOMMENDED BY CONNECTOR MANUFACTURER. PROVIDE EMBOSSING DIE CODE OR OTHER STANDARD METHOD TO MAKE A VISIBLE INDICATION THAT A CONNECTOR HAS BEEN ADEQUATELY COMPRESSED ON GROUNDING CONDUCTOR.

C. EQUIPMENT GROUNDING CONDUCTOR TERMINATIONS: FOR NO. 8 AWG AND LARGER, USE PRESSURE-TYPE GROUNDING LUGS. NO. 10 AWG AND SMALLER GROUNDING CONDUCTORS MAY BE TERMINATED WITH WINGED PRESSURE-TYPE CONNECTORS.

D. NONCONTACT METAL RACEWAY TERMINATIONS: IF METALLIC RACEWAYS TERMINATE AT METAL HOUSINGS WITHOUT MECHANICAL AND ELECTRICAL CONNECTION TO HOUSING, TERMINATE EACH CONDUIT WITH A GROUNDING BUSHING. CONNECT GROUNDING BUSHINGS WITH A BARE GROUNDING CONDUCTOR TO GROUNDING BUS OR TERMINAL IN HOUSING. BOND ELECTRICALLY NON-CONTINUOUS CONDUITS AT ENTRANCES AND EXITS WITH GROUNDING BUSHINGS AND BARE GROUNDING CONDUCTORS, UNLESS OTHERWISE INDICATED.

E. UNDERGROUND CONNECTIONS: USE FOR UNDERGROUND CONNECTIONS, EXCEPT THOSE AT TEST WELLS.

F. CONNECTIONS AT TEST WELLS: USE COMPRESSION-TYPE CONNECTORS ON CONDUCTORS AND MAKE TWO BOLTED- AND CLAMPED-TYPE CONNECTIONS BETWEEN CONDUCTORS AND GROUND RODS.

G. CONNECTIONS AT BACK BOXES, JUNCTION BOXES, PULL BOXES, AND EQUIPMENT TERMINATIONS: THE EQUIPMENT GROUNDING CONDUCTOR(S) ASSOCIATED WITH ALL CIRCUITS IN THE BOX SHALL BE CONNECTED TOGETHER AND TO THE BOX USING A SUITABLE GROUNDING SCREW. THE REMOVAL OF THE RESPECTIVE RECEPTACLE, LUMINAIRE, OR OTHER DEVICE SERVED BY THE BOX SHALL NOT INTERRUPT THE GROUNDING CONTINUITY.

H. TIGHTEN SCREWS AND BOLTS FOR GROUNDING AND BONDING CONNECTORS AND TERMINALS ACCORDING TO MANUFACTURER'S PUBLISHED TORQUE-TIGHTENING VALUES. IF MANUFACTURER'S TORQUE VALUES ARE NOT INDICATED, USE THOSE SPECIFIED IN UL 486A AND UL 486B.

I. MOISTURE PROTECTION: IF INSULATED GROUNDING CONDUCTORS ARE CONNECTED TO GROUND RODS OR GROUNDING BUSES, INSULATE ENTIRE AREA OF CONNECTION AND SEAL AGAINST MOISTURE PENETRATION OF INSULATION AND CABLE.

12.02 INSTALLATION

A. USE ONLY COPPER CONDUCTORS FOR BOTH INSULATED AND BARE GROUNDING CONDUCTORS IN DIRECT CONTACT WITH EARTH, CONCRETE, MASONRY, CRUSHED STONE, AND SIMILAR MATERIALS.

B. GROUNDING CONDUCTORS: ROUTE ALONG SHORTEST AND STRAIGHTEST PATHS POSSIBLE, UNLESS OTHERWISE INDICATED. AVOID OBSTRUCTING ACCESS OR PLACING CONDUCTORS WHERE THEY MAY BE SUBJECTED TO STRAIN, IMPACT, OR DAMAGE. EACH GROUNDING CONDUCTOR THAT PASSES THROUGH A BELOW GRADE WALL MUST BE PROVIDED WITH A WATER STOP.

C. GROUNDING ELECTRODE CONDUCTOR (GEC) SHALL BE PROTECTED FROM PHYSICAL DAMAGE BY RIGID POLYVINYL CHLORIDE CONDUIT (PVC) IN EXPOSED LOCATIONS.

D. IN RACEWAYS, USE INSULATED EQUIPMENT GROUNDING CONDUCTORS.

12.03 EQUIPMENT GROUNDING SYSTEM

A. COMPLY WITH ELECTRICAL CODE, FOR TYPES, SIZES, AND QUANTITIES OF EQUIPMENT GROUNDING CONDUCTORS, UNLESS SPECIFIC TYPES, LARGER SIZES, OR MORE CONDUCTORS THAN REQUIRED BY ELECTRICAL CODE ARE INDICATED.

B. INSTALL EQUIPMENT GROUNDING CONDUCTORS IN ALL FEEDERS AND CIRCUITS. TERMINATE EACH END ON A GROUNDING LUG OR BUS.

12.04 BONDING SYSTEM

A. AT BUILDING EXPANSION JOINTS, PROVIDE FLEXIBLE BONDING JUMPERS TO CONNECT TO COLUMNS OR BEAMS ON EACH SIDE OF THE EXPANSION JOINT.

B. EXTERIOR METALLIC PULL AND JUNCTION BOX COVERS, METALLIC HAND RAILS: BOND TO GROUNDING SYSTEM USING FLEXIBLE GROUNDING CONDUCTORS.

C. BOND METAL DUCTS OF DUST COLLECTORS, PARTICULATE CONVEYING, FUME HOODS, AND OTHER HAZARDOUS MATERIALS TO THE EQUIPMENT GROUNDING CONDUCTORS OF ASSOCIATED PUMPS, FANS, OR BLOWERS. USE BRAIDED-TYPE BONDING STRAPS. PROVIDE BRAIDED BARE COPPER BONDING CONDUCTOR IN NONMETALLIC DUST COLLECTOR DUCTWORK TO EACH EQUIPMENT INLET LOCATION, AND BOND TO EQUIPMENT.

D. WATER HEATER, HEAT-TRACING, METAL WELL CASING, AND HEATING CABLES: INSTALL A SEPARATE EQUIPMENT GROUNDING CONDUCTOR TO EACH ELECTRIC WATER HEATER, HEAT-TRACING, AND ANTI-FROST HEATING CABLE. BOND CONDUCTOR TO HEATER UNITS, PIPING, WELL CASING, CONNECTED EQUIPMENT, AND COMPONENTS.

E. CONNECT BONDING CONDUCTORS TO METAL WATER PIPE USING A SUITABLE GROUND CLAMP. MAKE CONNECTIONS TO FLANGED PIPING AT STREET SIDE OF FLANGE. PROVIDE BONDING JUMPER AROUND WATER METER.

F. SIGNAL AND COMMUNICATION SYSTEMS: FOR TELEPHONE, ALARM, VOICE AND DATA, AND OTHER COMMUNICATION SYSTEMS, PROVIDE NO. 6 AWG MINIMUM INSULATED BONDING CONDUCTOR IN RACEWAY FROM GROUNDING ELECTRODE SYSTEM TO EACH SERVICE LOCATION, TERMINAL CABINET, WIRING CLOSET, AND CENTRAL EQUIPMENT LOCATION. LEAVE 10 FEET OF SLACK CONDUCTOR AT TERMINAL BOARD.

G. TELECOM SERVICE AND CENTRAL EQUIPMENT LOCATIONS AND WIRING CLOSETS: TERMINATE GROUNDING CONDUCTOR ON A 1/4-BY-2-BY-12-INCH GROUNDING BAR.

H. EQUIPMENT GROUND CONDUCTOR CONTINUITY: ALL SPLICED EQUIPMENT GROUNDING CONDUCTORS IN JUNCTION BOXES, CABINETS, AND DISTRIBUTION EQUIPMENT SHALL BE CONNECTED TOGETHER AND BONDED TO THE METAL ENCLOSURE.

I. REMOTE CONTROL, SIGNALING, AND FIRE ALARM CIRCUITS SHALL BE BONDED IN ACCORDANCE WITH THE MOST RECENT VERSION OF THE NATIONAL ELECTRIC CODE.

J. METAL POLES SUPPORTING OUTDOOR LIGHTING FIXTURES > 15 FEET: PROVIDE A GROUNDING ELECTRODE IN ADDITION TO INSTALLING A SEPARATE EQUIPMENT GROUNDING CONDUCTOR WITH SUPPLY BRANCH-CIRCUIT CONDUCTORS.

K. COMMON GROUND BONDING WITH LIGHTNING PROTECTION SYSTEM: BOND ELECTRICAL POWER SYSTEM GROUND DIRECTLY TO LIGHTNING PROTECTION SYSTEM GROUNDING CONDUCTOR AT CLOSEST POINT TO ELECTRICAL SERVICE GROUNDING ELECTRODE. USE BONDING CONDUCTOR SIZED SAME AS SYSTEM GROUNDING ELECTRODE CONDUCTOR AND INSTALL IN CONDUIT.

12.05 EQUIPOTENTIAL (MULTI-POINT) GROUNDING SYSTEM

A. PROVIDE AN EQUIPOTENTIAL GROUNDING SYSTEM IN THE FOLLOWING LOCATIONS:

12.06 FIELD QUALITY CONTROL

A. INSPECT GROUNDING AND BONDING SYSTEM CONDUCTORS AND CONNECTIONS FOR TIGHTNESS AND PROPER INSTALLATION.

1. MEASURE GROUND RESISTANCE FROM SYSTEM NEUTRAL CONNECTION AT SERVICE ENTRANCE TO CONVENIENT GROUND REFERENCE POINTS USING SUITABLE GROUND TESTING EQUIPMENT. RESISTANCE SHALL NOT EXCEED 5 OHMS.

2. TESTING: OWNER WILL ENGAGE A QUALIFIED TESTING AGENCY TO PERFORM THE FOLLOWING FIELD QUALITY-CONTROL TESTING:

3. TESTING: ENGAGE A QUALIFIED TESTING AGENCY TO PERFORM THE FOLLOWING FIELD QUALITY-CONTROL TESTING:

4. TESTING: PERFORM THE FOLLOWING FIELD QUALITY-CONTROL TESTING:

a. AFTER INSTALLING GROUNDING SYSTEM BUT BEFORE PERMANENT ELECTRICAL CIRCUITRY HAS BEEN ENERGIZED, TEST FOR COMPLIANCE WITH REQUIREMENTS.

b. TEST COMPLETED GROUNDING SYSTEM AT EACH LOCATION WHERE A MAXIMUM GROUND-RESISTANCE LEVEL IS SPECIFIED, AT SERVICE DISCONNECT ENCLOSURE GROUNDING TERMINAL, AND AT GROUND TEST WELLS. MEASURE GROUND RESISTANCE NOT LESS THAN TWO FULL DAYS AFTER THE LAST TRACE OF PRECIPITATION, AND WITHOUT THE SOIL BEING MOISTENED BY ANY MEANS OTHER THAN NATURAL DRAINAGE OR SEEPAGE AND WITHOUT CHEMICAL TREATMENT OR OTHER ARTIFICIAL MEANS OF REDUCING NATURAL GROUND RESISTANCE. PERFORM TESTS, BY THE FALL-OF-POTENTIAL METHOD ACCORDING TO IEEE 81.

c. EXCESSIVE GROUND RESISTANCE: IF RESISTANCE TO GROUND EXCEEDS SPECIFIED VALUES, NOTIFY ARCHITECT/ENGINEER PROMPTLY AND INCLUDE RECOMMENDATIONS TO REDUCE GROUND RESISTANCE.

12.07 GRADING AND PLANTING

A. RESTORE SURFACE FEATURES, INCLUDING VEGETATION, AT AREAS DISTURBED BY WORK OF THIS SECTION. REESTABLISH ORIGINAL GRADES, UNLESS OTHERWISE INDICATED. IF SOD HAS BEEN REMOVED, REPLACE IT AS SOON AS POSSIBLE AFTER BACKFILLING IS COMPLETED. RESTORE AREAS DISTURBED BY TRENCHING, STORING OF DIRT, CABLE LAYING, AND OTHER ACTIVITIES TO THEIR ORIGINAL CONDITION. INCLUDE APPLICATION OF TOPSOIL, FERTILIZER, LIME, SEED, SOD, SPRIG, AND MULCH. COMPLY WITH DIVISION 2. MAINTAIN RESTORED SURFACES. RESTORE DISTURBED PAVING.

END OF SECTION 26 05 26

SECTION 26 05 27 - SUPPORTING DEVICES

PART 13 - GENERAL

13.01 SECTION INCLUDES

A. CONDUIT AND EQUIPMENT SUPPORTS

B. FASTENING HARDWARE

13.02 QUALITY ASSURANCE

A. SUPPORT SYSTEMS SHALL BE ADEQUATE FOR WEIGHT OF EQUIPMENT AND CONDUIT, INCLUDING WIRING, WHICH THEY CARRY.

13.03 COORDINATION

A. COORDINATE SIZE, SHAPE AND LOCATION OF CONCRETE PADS WITH SECTION ON CAST-IN-PLACE CONCRETE OR CONCRETE TOPPING.

PART 14 - PRODUCTS

14.01 MANUFACTURERS

A. ALLIED SUPPORT SYSTEMS

B. COOPER B-LINE

C. ERICO, INC.

D. HILTI

E. POWER FASTENERS

F. ORBIT INDUSTRIES

14.02 MATERIAL

A. SUPPORT CHANNEL: HOT-DIP GALVANIZED; PAINTED STEEL.

B. HARDWARE: CORROSION RESISTANT.

C. ROOFTOP SUPPORT SYSTEM:

1. PROVIDE PRE-FABRICATED ROOF SUPPORTS FOR ALL CONDUIT AND EQUIPMENT INSTALLED ABOVE THE ROOF. SUPPORT ALL CONDUIT AND EQUIPMENT A MINIMUM OF 4" ABOVE ROOF.

2. SUPPORT SYSTEM SHALL BE COMPATIBLE WITH SINGLE PLY, BITUMINOUS, METAL, AND SPRAY FOAM ROOF SYSTEMS. THE BASE SHALL BE ROUNDED TO PREVENT DAMAGE TO THE ROOF, AND DRAINAGE HOLES SHALL PREVENT PONDING OF WATER IN THE SUPPORT.

3. ALL METAL COMPONENTS SHALL BE HOT DIPPED GALVANIZED. MOUNTING HARDWARE SHALL BE STAINLESS STEEL OR HOT DIPPED GALVANIZED. SUPPORT SHALL BE UV, CORROSION, AND FREEZE/THAW RESISTANT. SUPPORT SHALL INCLUDE ORANGE PAINT, REFLECTIVE SAFETY ORANGE ACCENTS, OR SIMILAR MARKINGS FOR INCREASED VISIBILITY.

4. PRODUCTS:

a. ANVIL INTERNATIONAL HBS-BASE SERIES

b. COOPER B-LINE DURA-BLOK

c. ERICO CADDY PYRAMID 50, 150, 300, OR 600 (TO MATCH LOAD).

D. TRUSS AND JOIST SUPPORT SYSTEM: PROVIDED THE INSTALLATION COMPLIES WITH ALL LOADING REQUIREMENTS OF TRUSS AND JOIST MANUFACTURERS, THE FOLLOWING PRACTICES ARE ACCEPTABLE:

1. LOADS OF 100 LBS. OR LESS MAY BE ATTACHED ANYWHERE ALONG THE TOP OR BOTTOM CHORDS OF TRUSSES OR JOISTS WITH A MINIMUM 3' SPACING BETWEEN LOADS.

2. LOADS GREATER THAN 100 LBS. MUST BE HUNG CONCENTRICALLY AND MAY BE HUNG FROM TOP OR BOTTOM CHORD, PROVIDED ONE OF THE FOLLOWING CONDITIONS IS MET:

a. THE HANGER IS ATTACHED WITHIN 6" FROM A WEB/CHORD JOINT.

b. ADDITIONAL L2X2X1/4 WEB REINFORCEMENT IS INSTALLED PER MANUFACTURER'S REQUIREMENTS.

3. IT IS PROHIBITED TO CANTILEVER A LOAD USING AN ANGLE OR OTHER STRUCTURAL COMPONENT THAT IS ATTACHED TO A TRUSS OR JOIST IN SUCH A FASHION THAT A TORSIONAL FORCE IS APPLIED TO THAT STRUCTURAL MEMBER.

4. IF CONDITIONS CANNOT BE MET, COORDINATE INSTALLATION WITH TRUSS OR JOIST MANUFACTURER AND CONTACT ARCHITECT/ENGINEER.

PART 15 - EXECUTION

15.01 INSTALLATION

A. FASTEN HANGER RODS, CONDUIT CLAMPS, AND OUTLET AND JUNCTION BOXES TO BUILDING STRUCTURE USING EXPANSION ANCHORS IN CONCRETE AND BEAM CLAMPS ON STRUCTURAL STEEL.

B. TRAPEZE SUPPORT INSTALLATION: CUT HANGER RODS BACK AT TRAPEZE SUPPORTS SO THEY DO NOT EXTEND MORE THAN 3/4" BELOW BOTTOM FACE OF LOWEST FASTENER AND BLUNT ANY SHARP EDGES.

C. USE TOGGLE BOLTS OR HOLLOW WALL FASTENERS IN HOLLOW MASONRY, PLASTER, OR GYPSUM BOARD PARTITIONS AND WALLS; EXPANSION ANCHORS OR PRESET INSERTS IN SOLID MASONRY WALLS; SELF-DRILLING ANCHORS OR EXPANSION ANCHOR ON CONCRETE SURFACES; SHEET METAL SCREWS IN SHEET METAL STUDS; AND WOOD SCREWS IN WOOD CONSTRUCTION.

D. DO NOT FASTEN SUPPORTS TO CEILING SYSTEMS, PIPING, DUCTWORK, MECHANICAL EQUIPMENT, OR CONDUIT, UNLESS OTHERWISE NOTED.

E. DO NOT USE POWDER-ACTUATED ANCHORS WITHOUT SPECIFIC PERMISSION.

F. DO NOT DRILL STRUCTURAL STEEL MEMBERS.

G. FABRICATE SUPPORTS FROM STRUCTURAL STEEL OR STEEL CHANNEL, RIGIDLY WELDED OR BOLTED TO PRESENT A NEAT APPEARANCE. USE HEXAGON HEAD BOLTS WITH SPRING LOCK WASHERS UNDER ALL NUTS.

H. IN WET LOCATIONS AND ON ALL BUILDING FLOORS BELOW EXTERIOR EARTH GRADE INSTALL FREE-STANDING ELECTRICAL EQUIPMENT ON CONCRETE PADS.

I. INSTALL CABINETS AND PANELBOARDS WITH MINIMUM OF FOUR ANCHORS. PROVIDE HORIZONTAL BACKING/SUPPORT FRAMING IN STUD WALLS FOR RIGID MOUNTING.

J. BRIDGE STUDS TOP AND BOTTOM WITH CHANNELS TO SUPPORT FLUSH-MOUNTED CABINETS AND PANELBOARDS IN STUD WALLS.

K. DO NOT EXCEED 25 LBS. PER HANGER AND A MINIMUM SPACING OF 2'-0" ON CENTER WHEN ATTACHING TO METAL ROOF DECKING (EXCLUDES CONCRETE ON METAL DECK). THIS 25 LBS. LOAD AND 2'-0" SPACING INCLUDE ADJACENT ELECTRICAL AND MECHANICAL ITEMS HANGING FROM DECK. IF THE HANGER RESTRICTIONS CANNOT BE ACHIEVED, SUPPLEMENTAL FRAMING OFF STEEL FRAMING WILL NEED TO BE ADDED.

L. REFER TO SECTION 26 05 33 FOR SPECIAL CONDUIT SUPPORTING REQUIREMENTS.

15.02 FINISH

A. PRIME COAT EXPOSED STEEL HANGERS AND SUPPORTS. HANGERS AND SUPPORTS IN CRAWL SPACES, PIPE SHAFTS, AND ABOVE SUSPENDED CEILING SPACES ARE NOT CONSIDERED EXPOSED.

B. TRIM ALL ENDS OF EXPOSED FIELD FABRICATED STEEL HANGERS, SLOTTED CHANNEL AND THREADED ROD TO WITHIN 1" OF SUPPORT OR FASTENER TO ELIMINATE POTENTIAL INJURY TO PERSONNEL UNLESS SHOWN OTHERWISE ON THE DRAWINGS. SMOOTH ENDS AND INSTALL ELASTOMERIC INSULATION WITH TWO COATS OF LATEX PAINT IF EXPOSED STEEL IS WITHIN 6'-6" OF FINISH FLOOR AND PRESENTS POTENTIAL INJURY TO PERSONNEL.

END OF SECTION 26 05 27

SECTION 26 05 33 - CONDUIT AND BOXES

PART 16 - GENERAL

16.01 SECTION INCLUDES

A. RIGID METALLIC CONDUIT AND FITTINGS (RMC)

B. INTERMEDIATE METALLIC CONDUIT AND FITTINGS (IMC)

C. ELECTRICAL METALLIC TUBING AND FITTINGS (EMT)

D. FLEXIBLE METALLIC CONDUIT AND FITTINGS (FMC)

E. LIQUIDTIGHT FLEXIBLE METALLIC CONDUIT AND FITTINGS (LFMC)

F. RIGID POLYVINYL CHLORIDE CONDUIT AND FITTINGS (PVC)

G. WALL AND CEILING OUTLET BOXES

H. PULL AND JUNCTION BOXES

16.02 RELATED WORK

A. SECTION 26 05 53 - ELECTRICAL IDENTIFICATION: REFER TO ELECTRICAL IDENTIFICATION FOR COLOR AND IDENTIFICATION LABELING REQUIREMENTS.

16.03 REFERENCES

A. AMERICAN NATIONAL STANDARDS INSTITUTE (ANSI):

1. ANSI C80.1 - RIGID STEEL CONDUIT, ZINC-COATED

2. ANSI C80.3 - ELECTRICAL METALLIC TUBING, ZINC-COATED AND FITTINGS

3. ANSI C80.4 - FITTINGS FOR RIGID METAL CONDUIT AND ELECTRICAL METALLIC TUBING

4. ANSI C80.6 - INTERMEDIATE METAL CONDUIT, ZINC COATED

5. ANSI/NEMA OS 1 - SHEET-STEEL OUTLET BOXES, DEVICE BOXES, COVERS AND BOX SUPPORTS

6. ANSI/NEMA OS 2 - NONMETALLIC OUTLET BOXES, DEVICE BOXES, COVERS AND BOX SUPPORTS

B. FEDERAL SPECIFICATIONS (FS):

1. A-A-50553A - FITTINGS FOR CONDUIT, METAL, RIGID, (THICK-WALL AND THIN-WALL (EMT) TYPE

2. A-A-55810 - SPECIFICATION FOR FLEXIBLE METAL CONDUIT

C. NECA "STANDARDS OF INSTALLATION"

D. NATIONAL ELECTRICAL MANUFACTURERS ASSOCIATION (NEMA):

1. ANSI/NEMA FB 1 - FITTINGS, CAST METAL BOXES, AND CONDUIT BODIES FOR CONDUIT, ELECTRICAL METALLIC TUBING AND CABLE

2. RN 1 - POLYVINYL CHLORIDE (PVC) EXTERNALLY COATED GALVANIZED RIGID STEEL CONDUIT, RIGID ALUMINUM CONDUIT, AND INTERMEDIATE METAL CONDUIT

3. TC 2 - ELECTRICAL POLYVINYL CHLORIDE (PVC) CONDUIT

4. TC 9 - FITTINGS FOR PVC PLASTIC UTILITIES DUCT FOR UNDERGROUND INSTALLATION

E. NFPA 70 - NATIONAL ELECTRICAL CODE (NEC)

F. CEC CALIFORNIA ELECTRICAL CODE

G. UNDERWRITERS LABORATORIES (UL): APPLICABLE LISTINGS

1. UL 1 - FLEXIBLE METAL CONDUIT

2. UL 6 - RIGID METAL CONDUIT

3. UL 360 - LIQUID TIGHT FLEXIBLE STEEL CONDUIT

4. UL514-B - CONDUIT TUBING AND CABLE FITTINGS

5. UL651-A - TYPE EB AND A PVC CONDUIT AND HDPE CONDUIT

6. UL651-B - CONTINUOUS LENGTH HDPE CONDUIT

7. UL746A - STANDARD FOR POLYMERIC MATERIALS - SHORT TERM PROPERTY EVALUATIONS

8. UL797 - ELECTRICAL METAL TUBING

9. UL1242 - INTERMEDIATE METAL CONDUIT

H. AMERICAN STANDARD OF TESTING AND MATERIALS (ASTM):

1. ASTM D 570 - STANDARD TEST METHOD FOR WATER ABSORPTION OF PLASTICS

2. ASTM D 638 - STANDARD TEST METHOD FOR TENSILE PROPERTIES OF PLASTICS

3. ASTM D 648 - STANDARD TEST METHOD FOR DEFLECTION TEMPERATURE OF PLASTICS UNDER FLEXURAL LOAD IN THE EDGE WISE POSITION

4. ASTM D 2412 - STANDARD TEST METHOD FOR DETERMINATION OF EXTERNAL LOADING CHARACTERISTICS OF PLASTIC PIPE BY PARALLEL-PLATE LOADING

5. ASTM D 2447 - STANDARD SPECIFICATION FOR POLYETHYLENE (PE) PLASTIC PIPE, SCHEDULES 40 AND 80, BASED ON OUTSIDE DIAMETER

6. ASTM D 3350 - STANDARD SPECIFICATION FOR POLYETHYLENE PLASTIC PIPE AND FITTINGS MATERIAL

ARCHITECTURE ENGINEERING INTERIOR DESIGN
LANDSCAPE ARCHITECTURE PLANNING

949-261-1001 Office

LPADesignStudios.com

5301 California Avenue, Suite 100
Irvine, California 92617

REGISTERED PROFESSIONAL ENGINEER
NESTOR C. IGNACIO, JR.
Lic. E16934
Exp. 6-30-2027
ELECTRICAL
STATE OF CALIFORNIA

www.imegcorp.com
300 NORTH LAKE AVENUE
12TH FLOOR
PASADENA, CA 91101
P: 626.463.2800 F: 626.463.2801
PROJECT #25007252.00

This document and all other project documents, ideas, aesthetics and designs incorporated therein are instruments of service. All project documents are copyright protected, are the property of LPA, Inc. (LPA) and cannot be lawfully used in whole or in part for any project or purpose except as set forth in the contractual agreement between LPA and its Client. The unauthorized disclosure and/or use of the project documents (including the creation of derivative works), may give rise to liability for copyright infringement, unlawful disclosure, use or misappropriation of property rights held by LPA. The unauthorized use of the project documents will give rise to the recovery of monetary losses and damages including attorney fees and costs for which the unauthorized user will be held liable.
Project documents describe the design intent of the work and are not a representation of as-built or existing conditions. LPA is not responsible for any discrepancies between the project documents and the existing conditions.

© LPA, Inc.

ALTADENA ELEMENTARY SCHOOL

743 E Calaveras St,
Altadena, CA 91001

ALTADENA ELEMENTARY SCHOOL

Revision	Date
Addendum 1	04/17/2026

Submittal	Date
100% SCHEMATIC DESIGN	12/05/2025
DSA SUBMITTAL	02/02/2026
DSA SUBMITTAL V2	03/13/2026

33366
Checker

E402

ELECTRICAL SPECIFICATIONS

I. DEFINITIONS:
1. FITTINGS: CONDUIT CONNECTION OR COUPLING.
2. BODY: ENLARGED FITTINGS WITH OPENING ALLOWING ACCESS TO THE CONDUCTORS FOR PULLING PURPOSES ONLY.
3. MECHANICAL SPACES: ENCLOSED AREAS, USUALLY KEPT SEPARATED FROM THE GENERAL PUBLIC, WHERE THE PRIMARY USE IS TO HOUSE SERVICE EQUIPMENT AND TO ROUTE SERVICES. THESE SPACES GENERALLY HAVE EXPOSED STRUCTURES, BARE CONCRETE AND NON-ARCHITECTURALLY EMPHASIZED FINISHES.
4. FINISHED SPACES: ENCLOSED AREAS WHERE THE PRIMARY USE IS TO HOUSE PERSONNEL AND THE GENERAL PUBLIC. THESE SPACES GENERALLY HAVE ARCHITECTURALLY EMPHASIZED FINISHES, CEILINGS AND/OR FLOORS.
5. CONCEALED: NOT VISIBLE BY THE GENERAL PUBLIC. OFTEN INDICATES A LOCATION EITHER ABOVE THE CEILING, IN THE WALLS, IN OR BENEATH THE FLOOR SLAB, IN COLUMN COVERINGS, OR IN THE CEILING CONSTRUCTION.
6. ABOVE GRADE: NOT DIRECTLY IN CONTACT WITH THE EARTH. FOR EXAMPLE, AN INTERIOR WALL LOCATED AT AN ELEVATION BELOW THE FINISHED GRADE SHALL BE CONSIDERED ABOVE GRADE BUT A WALL RETAINING EARTH SHALL BE CONSIDERED BELOW GRADE.
7. SLAB: HORIZONTAL POUR OF CONCRETE USED FOR A FLOOR OR SUB-FLOOR.

16.04 SUBMITTALS
A. INCLUDE FITTINGS AND CONDUITS 1.5" AND LARGER IN COORDINATION FILES. INCLUDE ALL IN--FLOOR AND UNDERFLOOR CONDUIT IN COORDINATION FILES. REFER TO SECTION 26 05 00 FOR COORDINATION DRAWING REQUIREMENTS.

PART 17 - PRODUCTS

17.01 RIGID METALLIC CONDUIT (RMC) AND FITTINGS
A. MANUFACTURERS:
1. ALLIED
2. LTV
3. STEELDUCT
4. CALBOND CALPIPE
5. WHEATLAND TUBE CO
6. O-Z GEDNEY
7. OR APPROVED EQUAL.
B. MANUFACTURERS OF RMC CONDUIT FITTINGS:
1. APPLETON ELECTRIC
2. O-Z/GEDNEY CO.
3. ELECTROLINE
4. RACO
5. BRIDGEPORT
6. MIDWEST
7. REGAL
8. THOMAS & BETTS
9. CROUSE-HINDS
10. KILLARK
11. ORBIT INDUSTRIES
12. OR APPROVED EQUAL.
C. MINIMUM SIZE GALVANIZED STEEL: 3/4 INCH, UNLESS OTHERWISE NOTED.
D. FITTINGS AND CONDUIT BODIES:
1. END BELL FITTINGS: MALLEABLE IRON, HOT DIP GALVANIZED, THREADED FLARE TYPE WITH PROVISIONS FOR MOUNTING TO FORM.
2. CONDUIT END BUSHINGS: MALLEABLE IRON TYPE WITH MOLDED-ON HIGH IMPACT PHENOLIC THERMOSETTING INSULATION. WHERE REQUIRED ELSEWHERE IN THE CONTRACT DOCUMENTS, BUSHING SHALL BE COMPLETE WITH GROUND CONDUCTOR SADDLE AND CLAMP. HIGH IMPACT PHENOLIC THREADED TYPE BUSHINGS ARE NOT ACCEPTABLE.
3. ALL OTHER FITTINGS AND CONDUIT BODIES SHALL BE OF MALLEABLE IRON CONSTRUCTION AND HOT DIP GALVANIZED.
E. PVC EXTERNALLY COATED CONDUIT: COMPLIANT WITH NEMA RN 1; RIGID GALVANIZED STEEL CONDUIT WITH EXTERNAL 40 MIL PVC COATING AND INTERNAL 2 MIL URETHANE COATING SURFACE. ALL FITTINGS AND CONDUIT BODIES SHALL BE COMPLETE WITH COATING. THE PVC COATED SYSTEM SHALL INCLUDE NECESSARY PVC COATED FITTINGS, BOXES AND COVERS TO FORM A COMPLETE ENCAPSULATED SYSTEM.
1. ACCEPTABLE MANUFACTURERS:
a. CALBOND CALPIPE
b. ROBROY
c. T&B OCAL
d. OR APPROVED EQUAL.

17.02 INTERMEDIATE METALLIC CONDUIT (IMC) AND FITTINGS
A. MINIMUM SIZE GALVANIZED STEEL: 3/4 INCH, UNLESS OTHERWISE NOTED.
B. MANUFACTURERS:
1. ALLIED
2. LTV
3. STEELDUCT
4. WHEATLAND TUBE CO
5. O-Z GEDNEY
6. OR APPROVED EQUAL.
C. FITTINGS AND CONDUIT BODIES:
1. END BELL FITTINGS: MALLEABLE IRON, HOT DIP GALVANIZED, THREADED FLARE TYPE WITH PROVISIONS FOR MOUNTING TO FORM.
2. CONDUIT END BUSHINGS: MALLEABLE IRON TYPE WITH MOLDED-ON HIGH IMPACT PHENOLIC THERMOSETTING INSULATION. WHERE REQUIRED ELSEWHERE IN THE CONTRACT DOCUMENTS, BUSHING SHALL BE COMPLETE WITH GROUND CONDUCTOR SADDLE AND CLAMP. HIGH IMPACT PHENOLIC THREADED TYPE BUSHINGS ARE NOT ACCEPTABLE.
3. ALL OTHER FITTINGS AND CONDUIT BODIES SHALL BE OF MALLEABLE IRON CONSTRUCTION AND HOT DIP GALVANIZED.

17.03 ELECTRICAL METALLIC TUBING (EMT) AND FITTINGS
A. MINIMUM SIZE ELECTRICAL METALLIC TUBING: 3/4 INCH, UNLESS OTHERWISE NOTED.
B. MANUFACTURERS OF EMT CONDUIT:
1. ALLIED
2. CALBOND CALPIPE
3. LTV
4. STEELDUCT
5. WHEATLAND TUBE CO
6. OR APPROVED EQUAL.
C. FITTINGS AND CONDUIT BODIES:
1. 2" DIAMETER OR SMALLER: COMPRESSION TYPE OF STEEL DESIGNED FOR THEIR SPECIFIC APPLICATION.
2. 1/2" AND 3/4" CONDUIT: PUSH-ON CONNECTORS AND COUPLERS WITH LOCKING RING AND WASHER OF ZINC PLATED STEEL, LISTED FOR USE IN DRY LOCATIONS.
3. LARGER THAN 2": COMPRESSION TYPE OF STEEL DESIGNED FOR THEIR SPECIFIC APPLICATION.
4. MANUFACTURERS OF EMT CONDUIT FITTINGS:
a. APPLETON ELECTRIC
b. O-Z/GEDNEY CO.
c. ELECTROLINE
d. RACO
e. BRIDGEPORT
f. MIDEWEST
g. REGAL
h. THOMAS & BETTS
i. ORBIT INDUSTRIES
j. OR APPROVED EQUAL.

17.04 FLEXIBLE METALLIC CONDUIT (FMC) AND FITTINGS
A. MINIMUM SIZE GALVANIZED STEEL: 3/4 INCH, UNLESS OTHERWISE NOTED. LIGHTING BRANCH CIRCUIT WIRING TO AN INDIVIDUAL LUMINAIRE MAY BE A MANUFACTURED, UL LISTED 3/8" FLEXIBLE METAL CONDUIT AND FITTINGS WITH #14 AWG THHN CONDUCTORS AND AN INSULATED GROUND WIRE. MAXIMUM LENGTH OF 3/8" FMC SHALL BE SIX (6) FEET.
B. MANUFACTURERS:
1. AMERICAN FLEX
2. ALFLEX
3. ELECTRI-FLEX CO
4. OR APPROVED EQUAL.
C. CONSTRUCTION: FLEXIBLE STEEL, APPROVED FOR CONDUIT GROUND, ZINC COATED, THREADLESS TYPE FORMED FROM A CONTINUOUS LENGTH OF SPIRALLY WOUND, INTERLOCKED ZINC COATED STRIP STEEL. PROVIDE A SEPARATE EQUIPMENT GROUNDING CONDUCTOR WHEN USED FOR EQUIPMENT WHERE FLEXIBILITY IS REQUIRED.
D. FITTINGS AND CONDUIT BODIES:
1. THREADLESS HINGED CLAMP TYPE, GALVANIZED ZINC COATED CADMIUM PLATED MALLEABLE CAST IRON.
2. FITTINGS AND CONDUIT BODIES SHALL INCLUDE PLASTIC OR CAST METAL INSERTS SUPPLIED BY THE MANUFACTURER TO PROTECT CONDUCTORS FROM SHARP EDGES.
3. MANUFACTURERS:
a. O-Z/GEDNEY CO.
b. THOMAS & BETTS
c. APPLETON ELECTRIC
d. ELECTROLINE
e. BRIDGEPORT
f. MIDWEST
g. REGAL
h. ORBIT INDUSTRIES
i. OR APPROVED EQUAL.

17.05 LIQUIDTIGHT FLEXIBLE METALLIC CONDUIT (LFMC) AND FITTINGS
A. MANUFACTURERS:
1. ANACONDA TYPE UA
2. ELECTRI-FLEX TYPE LA
3. ALFLEX
4. CARLON (LAMSON & SESSIONS)
5. OR APPROVED EQUAL.
B. CONSTRUCTION: FLEXIBLE STEEL, APPROVED FOR CONDUIT GROUND, ZINC COATED, THREADLESS TYPE FORMED FROM A CONTINUOUS LENGTH OF SPIRALLY WOUND, INTERLOCKED ZINC COATED STRIP STEEL AND AN EXTRUDED PVC COVER.
C. FITTINGS AND CONDUIT BODIES:
1. WATERTIGHT, COMPRESSION TYPE, GALVANIZED ZINC COATED CADMIUM PLATED MALLEABLE CAST IRON, UL LISTED.
2. FITTINGS AND CONDUIT BODIES SHALL INCLUDE PLASTIC OR CAST METAL INSERTS SUPPLIED BY THE MANUFACTURER TO PROTECT CONDUCTORS FROM SHARP EDGES.
3. MANUFACTURERS:
a. APPLETON ELECTRIC
b. O-Z/GEDNEY CO.
c. ELECTROLINE
d. BRIDGEPORT
e. THOMAS & BETTS
f. MIDWEST
g. REGAL
h. CARLON (LAMSON & SESSIONS)
i. ORBIT INDUSTRIES
j. OR APPROVED EQUAL.

17.06 RIGID NON-METALLIC CONDUIT (PVC) AND FITTINGS
A. MINIMUM SIZE RIGID SMOOTH-WALL NONMETALLIC CONDUIT: 3/4 INCH, UNLESS OTHERWISE NOTED.
B. ACCEPTABLE MANUFACTURERS:
1. CARLON (LAMSON & SESSIONS) TYPE 40
2. CANTEX, J.M. MFG.
3. OR APPROVED EQUAL.
C. FITTINGS AND CONDUIT BODIES: NEMA TC 3; SLEEVE TYPE SUITABLE FOR AND MANUFACTURED ESPECIALLY FOR USE WITH THE CONDUIT BY THE CONDUIT MANUFACTURER.
D. PLASTIC CEMENT FOR JOINING CONDUIT AND FITTINGS SHALL BE PROVIDED AS RECOMMENDED BY THE MANUFACTURER.

ASTM TEST	DESCRIPTION	VALUES HDPE
D-1505	DENSITY G/CM 3	LESS THAN 0.941
D-1238	MELT INDEX, G/10 MIN CONDITION E	GREATER THAN 0.55 GRAMS/10 MIN.
D-638	TENSILE STRENGTH AT YIELD (PSI)	3000 MIN.
D-1693	ENVIRONMENTAL STRESS CRACK RESISTANCE CONDITION B, F 20	96 HRS.
D-790	FLEXURAL MODULUS, MPA (PSI)	LESS THAN 80,000
D-746	BRITTLENESS TEMPERATURE	-75°C MAX

17.07 OUTLET BOXES
A. SHEET METAL OUTLET BOXES: ANSI/NEMA OS 1; GALVANIZED STEEL, 16 GAUGE (APPROXIMATELY 0.0625 INCHES), WITH 1/2-INCH MALE FIXTURE STUDS WHERE REQUIRED.
B. NONMETALLIC OUTLET BOXES: ANSI/NEMA OS 2.
C. CAST BOXES: NEMA FB1, TYPE FD, ALUMINUM, CAST FERALLOY, OR STAINLESS STEEL DEEP TYPE, GASKETED COVER, THREADED HUBS.
D. OUTLET BOXES FOR LUMINAIRES TO BE NOT LESS THAN 1-1/2" DEEP, DEEPER IF REQUIRED BY THE NUMBER OF WIRES OR CONSTRUCTION. THE BOX SHALL BE COORDINATED WITH SURFACE LUMINAIRES TO CONCEAL THE BOX FROM VIEW OR PROVIDE A FINISHED TRIM PLATE.
E. SWITCH OUTLET BOXES FOR LOCAL LIGHT CONTROL SWITCHES, DIMMERS AND OCCUPANCY SENSORS SHALL BE 4 INCHES SQUARE BY 2-1/8 INCHES DEEP, WITH RAISED COVER TO FIT FLUSH WITH FINISH WALL LINE. MULTIPLE GANG SWITCH OUTLETS SHALL CONSIST OF THE REQUIRED NUMBER OF GANG BOXES APPROPRIATE TO THE QUANTITY OF SWITCHES COMPRISING THE GANG. WHERE WALLS ARE PLASTERED, PROVIDE A PLASTER RAISED COVER. WHERE SWITCH OUTLET BOXES OCCUR IN EXPOSED CONCRETE BLOCK WALLS, BOXES SHALL BE INSTALLED IN THE BLOCK CAVITY WITH A RAISED SQUARE EDGE TILE COVER OF SUFFICIENT DEPTH TO EXTEND OUT TO FACE OF BLOCK OR MASONRY BOXES.
F. OUTLET BOXES FOR TELEPHONE SUBSTATIONS IN WALLS AND COLUMNS SHALL BE 4 INCHES SQUARE AND 2-1/8 INCHES DEEP WITH SINGLE GANG RAISED COVER TO FIT FLUSH WITH FINISHED WALL LINE EQUIPPED WITH FLUSH TELEPHONE PLATE.
G. WALL OR COLUMN RECEPTACLE OUTLET BOXES SHALL BE 4 INCHES SQUARE WITH RAISED COVER TO FIT FLUSH WITH FINISHED WALL LINE. BOXES IN CONCRETE BLOCK WALLS SHALL BE INSTALLED THE SAME AS FOR SWITCH BOXES IN BLOCK WALLS.

17.08 JB; PULL AND JUNCTION BOXES
A. SHEET METAL BOXES: ANSI/NEMA OS 1; GALVANIZED STEEL.
B. SHEET METAL BOXES LARGER THAN 12 INCHES IN ANY DIMENSION THAT CONTAIN TERMINATIONS OR COMPONENTS: CONTINUOUS HINGED ENCLOSURE WITH 1/4 TURN LATCH AND WHITE BACK PANEL FOR MOUNTING TERMINAL BLOCKS AND ELECTRICAL COMPONENTS.
C. CAST METAL BOXES FOR OUTDOOR AND WET LOCATION INSTALLATIONS: NEMA 250; TYPE 4 AND TYPE 6, FLAT-FLANGED, SURFACE-MOUNTED JUNCTION BOX, UL LISTED AS RAINTIGHT. GALVANIZED CAST IRON BOX AND COVER WITH GROUND FLANGE, NEOPRENE GASKET, AND STAINLESS STEEL COVER SCREWS.
D. CAST METAL BOXES FOR UNDERGROUND INSTALLATIONS: NEMA 250; TYPE 4, INSIDE FLANGED, RECESSED COVER BOX FOR FLUSH MOUNTING, UL LISTED AS RAINTIGHT. GALVANIZED CAST IRON BOX AND PLAIN COVER WITH NEOPRENE GASKET AND STAINLESS STEEL COVER SCREWS.
E. FLANGED TYPE BOXES SHALL BE USED WHERE INSTALLED FLUSH IN WALL.

PART 18 - EXECUTION

18.01 CONDUIT INSTALLATION SCHEDULE AND SIZING
A. IN THE EVENT THE LOCATION OF CONDUIT INSTALLATION REPRESENTS CONFLICTING INSTALLATION REQUIREMENTS AS SPECIFIED IN THE FOLLOWING SCHEDULE, A CLARIFICATION SHALL BE OBTAINED FROM THE ARCHITECT/ENGINEER. IF THIS CONTRACTOR IS UNABLE TO OBTAIN A CLARIFICATION AS OUTLINED ABOVE, CONCEALED RIGID GALVANIZED STEEL CONDUIT INSTALLED PER THESE SPECIFICATIONS AND THE ELECTRICAL CODE SHALL BE REQUIRED.
B. INSTALLATION SCHEDULE: REFER TO DRAWINGS.
C. SIZE CONDUIT AS SHOWN ON THE DRAWINGS AND SPECIFICATIONS. WHERE NOT INDICATED IN THE CONTRACT DOCUMENTS, CONDUIT SIZE SHALL BE ACCORDING TO THE ELECTRICAL CODE. CONDUIT AND CONDUCTOR SIZING SHALL BE COORDINATED TO LIMIT CONDUCTOR FILL TO LESS THAN 40%, MAINTAIN CONDUCTOR AMPERE CAPACITY AS REQUIRED BY THE ELECTRICAL CODE (TO INCLUDE ENLARGED CONDUCTORS DUE TO TEMPERATURE AND QUANTITY DERATING VALUES) AND TO PREVENT EXCESSIVE VOLTAGE DROP AND PULLING TENSION DUE TO LONG CONDUIT/CONDUCTOR LENGTHS.
D. MINIMUM CONDUIT SIZE (UNLESS NOTED OTHERWISE):
1. ABOVE GRADE: 3/4 INCH. (THE USE OF 1/2 INCH WOULD BE ALLOWED FOR INSTALLATION CONDUIT TO INDIVIDUAL LIGHT SWITCHES, INDIVIDUAL RECEPTACLES AND INDIVIDUAL FIXTURE WHIPS FROM JUNCTION BOX.)
2. BELOW GRADE 5' OR LESS FROM BUILDING FOUNDATION: 1 INCH.
3. BELOW GRADE MORE THAN 5' FROM BUILDING FOUNDATION: 1 INCH.
4. TELECOMMUNICATION CONDUIT: 1 INCH.
5. CONTROLS CONDUIT: 3/4 INCH.
E. CONDUIT EMBEDDED IN SLABS ABOVE GRADE:
1. EMBEDDED INSTALLATION NOT ALLOWED IN ELEVATED SLABS WITH METAL COMPOSITE DECKS NOR STRUCTURAL POUR IN PLACE SLABS LESS THAN 6 INCHES IN DEPTH UNLESS SPECIFICALLY NOTED OR SHOWN ON DRAWINGS OTHERWISE.
2. MAXIMUM SIZE 1 INCH FOR CONDUITS CROSSING EACH OTHER.
F. CONDUIT SIZES SHALL CHANGE ONLY AT THE ENTRANCE OR EXIT TO A JUNCTION BOX, UNLESS SPECIFICALLY NOTED ON THE DRAWINGS.

18.02 CONDUIT ARRANGEMENT
A. IN GENERAL, CONDUIT SHALL BE INSTALLED CONCEALED IN WALLS, IN FINISHED SPACES AND WHERE POSSIBLE OR PRACTICAL, OR AS NOTED OTHERWISE. CONDUIT SHALL BE INSTALLED PARALLEL OR PERPENDICULAR TO WALLS, CEILINGS, AND EXPOSED STRUCTURAL MEMBERS. IN UNFINISHED SPACES, MECHANICAL AND UTILITY AREAS, CONDUIT MAY RUN EITHER CONCEALED OR EXPOSED AS CONDITIONS DICTATE AND AS PRACTICAL UNLESS NOTED OTHERWISE ON DRAWINGS. INSTALLATION SHALL MAINTAIN HEADROOM IN EXPOSED VICINITIES OF PEDESTRIAN OR VEHICULAR TRAFFIC.
B. EXPOSED CONDUIT ON EXTERIOR WALLS OR ABOVE ROOF WILL NOT BE ALLOWED WITHOUT PRIOR WRITTEN APPROVAL OF ARCHITECT/ENGINEER. A DRAWING OF THE PROPOSED ROUTING AND A PHOTO OF THE LOCATION SHALL BE SUBMITTED 14 DAYS PRIOR TO START OF CONDUIT ROUGH-IN. ROUTING SHALL BE SHOWN ON COORDINATION DRAWINGS.
C. CONDUIT ARRANGEMENT IN ELEVATED SLABS (RESTRICTED TO APPLICATIONS SPECIFICALLY NOTED OR SHOWN ON DRAWINGS):
1. CONDUIT SIZE SHALL NOT EXCEED ONE-THIRD OF THE STRUCTURAL SLAB THICKNESS. PLACE CONDUIT BETWEEN THE TOP AND BOTTOM REINFORCING WITH A MINIMUM OF 3" CONCRETE COVER.
2. PARALLEL CONDUITS SHALL BE SPACED AT LEAST 8 INCHES APART. EXCEPTION: WITHIN 18 INCHES OF COMMONLY SERVED FLOOR BOXES, JUNCTION BOXES, OR SIMILAR FLOOR DEVICES. ARRANGE CONDUITS PARALLEL OR PERPENDICULAR TO BUILDING LINES AND WALLS.
D. CONDUIT SHALL NOT SHARE THE SAME CELL AS STRUCTURAL REINFORCEMENT IN MASONRY WALLS.
E. CONDUIT RUNS SHALL BE ROUTED AS SHOWN ON LARGE SCALE DRAWINGS. CONDUIT ROUTING ON DRAWINGS SCALED 1/4"=1'-0" OR LESS SHALL BE CONSIDERED DIAGRAMMATIC, UNLESS NOTED OTHERWISE. THE CORRECT ROUTING, WHEN SHOWN DIAGRAMMATICALLY SHALL BE CHOSEN BY THE CONTRACTOR BASED ON INFORMATION IN THE CONTRACT DOCUMENTS, IN ACCORDANCE WITH MANUFACTURER'S WRITTEN INSTRUCTIONS, APPLICABLE CODES, THE NECA'S "STANDARD OF INSTALLATION", IN ACCORDANCE WITH RECOGNIZED INDUSTRY STANDARDS, AND COORDINATED WITH OTHER CONTRACTORS.
F. CONTRACTOR SHALL ADAPT CONTRACTOR'S WORK TO THE JOB CONDITIONS AND MAKE SUCH CHANGES AS REQUIRED AND PERMITTED BY THE ARCHITECT/ENGINEER, SUCH AS MOVING TO CLEAR BEAMS AND JOISTS, ADJUSTING AT COLUMNS, AVOIDING INTERFERENCE WITH WINDOWS, ETC., TO PERMIT THE PROPER INSTALLATION OF OTHER MECHANICAL AND/OR ELECTRICAL EQUIPMENT.
G. CONTRACTOR SHALL COOPERATE WITH ALL CONTRACTORS ON THE PROJECT. CONTRACTOR SHALL OBTAIN DETAILS OF OTHER CONTRACTOR'S WORK TO ENSURE FIT AND AVOID CONFLICT. ANY EXPENSE DUE TO THE FAILURE OF THIS CONTRACTOR TO DO SO SHALL BE PAID FOR IN FULL BY CONTRACTOR. THE OTHER TRADES INVOLVED AS DIRECTED BY THE ARCHITECT/ENGINEER SHALL PERFORM THE REPAIR OF WORK DAMAGED AS A RESULT OF NEGLECT OR ERROR BY THIS CONTRACTOR. THE RESULTANT COSTS SHALL BE BORNE BY THIS CONTRACTOR.

18.03 CONDUIT SUPPORT
A. CONDUIT RUNS INSTALLED ABOVE A SUSPENDED CEILING SHALL BE PROPERLY SUPPORTED. IN NO CASE SHALL CONDUIT REST ON THE SUSPENDED CEILING CONSTRUCTION, NOR UTILIZE CEILING SUPPORT SYSTEM FOR CONDUIT SUPPORT.
1. SUPPORT WIRE USED TO INDEPENDENTLY SUPPORT RACEWAY AND WIRING SYSTEMS ABOVE SUSPENDING CEILINGS SHALL BE SUPPORTED ON BOTH ENDS, MINIMUM 12 GAUGE SUSPENDED CEILING SUPPORT WIRE, AND DISTINGUISHABLE FROM CEILING SUPPORT SYSTEMS BY COLOR (FIELD PAINT), TAGGING, OR EQUIVALENT MEANS.
B. CONDUIT SHALL NOT BE SUPPORTED FROM DUCTWORK, WATER, SPRINKLER PIPING, OR OTHER NON-STRUCTURAL MEMBERS, UNLESS APPROVED BY THE ARCHITECT/ENGINEER. ALL SUPPORTS SHALL BE FROM STRUCTURAL SLABS, WALLS, STRUCTURAL MEMBERS, AND BAR JOISTS, AND COORDINATED WITH ALL OTHER APPLICABLE CONTRACTORS, UNLESS NOTED OTHERWISE.
C. CONDUIT SHALL BE HELD IN PLACE BY THE CORRECT SIZE OF GALVANIZED ONE-HOLE CONDUIT CLAMPS, TWO-HOLE CONDUIT STRAPS, PATENTED SUPPORT DEVICES, CLAMP BACK CONDUIT HANGERS, OR BY OTHER MEANS IF CALLED FOR ON THE DRAWINGS.
D. SUPPORT INDIVIDUAL HORIZONTAL RACEWAYS WITH SEPARATE, MALLEABLE-IRON PIPE HANGERS OR CLAMPS.
E. SPRING-STEEL CONDUIT CLIPS SPECIFICALLY DESIGNED FOR SUPPORTING SINGLE CONDUITS OR TUBING MAY BE USED IN LIEU OF MALLEABLE-IRON HANGERS FOR 1-1/2" AND SMALLER RACEWAYS SERVING LIGHTING AND RECEPTACLE BRANCH CIRCUITS ABOVE ACCESSIBLE CEILINGS AND FOR SECURING RACEWAYS TO SLOTTED CHANNEL AND ANGLE SUPPORTS.
F. GROUP CONDUITS IN PARALLEL RUNS WHERE PRACTICAL AND USE CONDUIT RACKS OR TRAPEZE HANGERS CONSTRUCTED OF STEEL CHANNEL, SUSPENDED WITH THREADED SOLID RODS OR WALL MOUNTED FROM METAL CHANNELS WITH CONDUIT STRAPS OR CLAMPS. PROVIDE SPACE IN EACH RACK OR TRAPEZE FOR 25% ADDITIONAL CONDUITS.
G. DO NOT EXCEED 25 LBS. PER HANGER AND A MINIMUM SPACING OF 2'-0" ON CENTER WHEN ATTACHING TO METAL ROOF DECKING (EXCLUDES CONCRETE ON METAL DECK). THIS 25 LBS. LOAD AND 2'-0" SPACING INCLUDE ADJACENT ELECTRICAL AND MECHANICAL ITEMS HANGING FROM DECK. IF THE HANGER RESTRICTIONS CANNOT BE ACHIEVED, SUPPLEMENTAL FRAMING OFF STEEL FRAMING WILL NEED TO BE ADDED.
H. ARRANGE SUPPORTS IN VERTICAL RUNS SO THE WEIGHT OF RACEWAYS AND ENCLOSED CONDUCTORS IS CARRIED ENTIRELY BY RACEWAY SUPPORTS, WITH NO WEIGHT LOAD ON RACEWAY TERMINALS.
I. SUPPORTS FOR METALLIC CONDUIT SHALL BE NO GREATER THAN 10 FEET. A SMALLER INTERVAL MAY BE USED IF NECESSITATED BY BUILDING CONSTRUCTION, BUT IN NO EVENT SHALL SUPPORT SPANS EXCEED THE ELECTRICAL CODE REQUIREMENTS. CONDUIT SHALL BE SECURELY FASTENED WITHIN 3 FEET OF EACH OUTLET BOX, JUNCTION BOX, DEVICE BOX, CABINET, OR FITTING.
J. SUPPORTS OF FLEXIBLE CONDUIT SHALL BE WITHIN 12 INCHES OF EACH OUTLET BOX, JUNCTION BOX, DEVICE BOX, CABINET, OR FITTING AND AT INTERVALS NOT TO EXCEED 4.5 FEET.
K. SUPPORTS FOR NON-METALLIC CONDUIT SHALL BE AT SUFFICIENTLY CLOSE INTERVALS TO ELIMINATE ANY SAG IN THE CONDUIT. THE MANUFACTURER'S RECOMMENDATIONS SHALL BE FOLLOWED, BUT IN NO EVENT SHALL SUPPORT SPANS EXCEED THE ELECTRICAL CODE REQUIREMENTS.
L. WHERE CONDUIT IS TO BE INSTALLED IN POURED CONCRETE FLOORS OR WALLS, PROVIDE CONCRETE-TIGHT CONDUIT INSERTS SECURELY FASTENED TO FORMS TO PREVENT CONDUIT MISPLACEMENT.
M. FINISH:
1. PRIME COAT EXPOSED STEEL HANGERS AND SUPPORTS. HANGERS AND SUPPORTS IN CRAWL SPACES, PIPE SHAFTS, AND ABOVE SUSPENDED CEILING SPACES ARE NOT CONSIDERED EXPOSED.
2. TRIM ALL ENDS OF EXPOSED FIELD FABRICATED STEEL HANGERS, SLOTTED CHANNEL AND THREADED ROD TO WITHIN 1" OF SUPPORT OR FASTENER TO ELIMINATE POTENTIAL INJURY TO PERSONNEL UNLESS SHOWN OTHERWISE ON THE DRAWINGS. SMOOTH ENDS AND INSTALL ELASTOMERIC INSULATION WITH TWO COATS OF LATEX PAINT IF EXPOSED STEEL IS WITHIN 6'-6" OF FINISH FLOOR AND PRESENTS POTENTIAL INJURY TO PERSONNEL.

18.04 CONDUIT INSTALLATION
A. CONDUIT CONNECTIONS:
1. SHORTER THAN STANDARD CONDUIT LENGTHS SHALL BE CUT SQUARE USING INDUSTRY STANDARDS. THE ENDS OF ALL CONDUITS CUT SHALL BE REAMED OR OTHERWISE FINISHED TO REMOVE ALL ROUGH EDGES.
2. METALLIC CONDUIT CONNECTIONS IN SLAB ON GRADE INSTALLATION SHALL BE SEALED AND ONE COAT OF RUST INHIBITOR PRIMER APPLIED AFTER THE CONNECTION IS MADE.
3. WHERE CONDUITS WITH TAPERED THREADS CANNOT BE COUPLED WITH STANDARD COUPLINGS, THEN APPROVED SPLIT OR ERICKSON COUPLINGS SHALL BE USED. RUNNING THREADS WILL NOT BE PERMITTED.
4. INSTALL EXPANSION/DEFLECTION JOINTS WHERE CONDUIT CROSSES STRUCTURE EXPANSION/SEISMIC JOINTS.
B. CONDUIT TERMINATIONS FOR ALL LOW VOLTAGE WIRING SHALL HAVE NYLON BUSHINGS INSTALLED ON EACH END OF EVERY CONDUIT RUN.
C. CONDUIT BENDS:
1. USE A HYDRAULIC ONE-SHOT CONDUIT BENDER OR FACTORY ELBOWS FOR BENDS IN CONDUIT 2" IN SIZE OR LARGER. ALL STEEL CONDUIT BENDING SHALL BE DONE COLD; NO HEATING OF STEEL CONDUIT SHALL BE PERMITTED.
2. ALL BENDS OF RIGID POLYVINYL CHLORIDE CONDUIT (PVC) SHALL BE MADE WITH THE MANUFACTURER'S APPROVED BENDING EQUIPMENT. THE USE OF SPOT HEATING DEVICES WILL NOT BE PERMITTED (I.E. BLOW TORCHES).
3. A RUN OF CONDUIT SHALL NOT CONTAIN MORE THAN THE EQUIVALENT OF FOUR (4) QUARTER BENDS (360°), INCLUDING THOSE BENDS LOCATED IMMEDIATELY AT THE OUTLET OR BODY.
4. TELECOMMUNICATIONS CONDUITS SHALL HAVE NO MORE THAN TWO (2) 90-DEGREE BENDS BETWEEN PULL POINTS AND CONTAIN NO CONTINUOUS SECTIONS LONGER THAN 100 FEET. INSERT PULL POINTS OR PULL BOXES FOR CONDUITS EXCEEDING 100 FEET IN LENGTH.
a. A THIRD BEND IS ACCEPTABLE IF:
1) THE TOTAL RUN IS NOT LONGER THAN (33) FEET.
2) THE CONDUIT SIZE IS INCREASED TO THE NEXT TRADE SIZE.
5. TELECOMMUNICATIONS PULL BOXES SHALL NOT BE USED IN LIEU OF A BEND. ALIGN CONDUITS THAT ENTER THE PULL BOX FROM OPPOSITE ENDS WITH EACH OTHER. PULL BOX SIZE SHALL BE TWELVE (12) TIMES THE DIAMETER OF THE LARGEST CONDUIT. SLIP SLEEVES OR GUTTERS CAN BE USED IN PLACE OF A PULL BOX.
6. TELECOMMUNICATIONS CONDUIT(S): MAINTAIN APPROPRIATE CONDUIT BEND RADIUS AT ALL TIMES. FOR CONDUITS WITH AN INTERNAL DIAMETER OF LESS THAN 2", MAINTAIN A BEND RADIUS OF AT LEAST 6 TIMES THE INTERNAL DIAMETER. FOR CONDUITS WITH AN INTERNAL DIAMETER 2" OR GREATER, MAINTAIN A BEND RADIUS OF AT LEAST 10 TIMES THE INTERNAL DIAMETER.
7. RIGID POLYVINYL CHLORIDE CONDUIT (PVC) RUNS LONGER THAN 100 FEET OR RUNS WHICH HAVE MORE THAN TWO 90° EQUIVALENT BENDS (REGARDLESS OF LENGTH) SHALL USE RIGID METAL OR RTRC FACTORY ELBOWS FOR BENDS.
8. USE CONDUIT BODIES TO MAKE SHARP CHANGES IN DIRECTION (I.E. AROUND BEAMS).
D. CONDUIT PLACEMENT:
1. CONDUIT SHALL BE MECHANICALLY CONTINUOUS FROM SOURCE OF CURRENT TO ALL OUTLETS. CONDUIT SHALL BE ELECTRICALLY CONTINUOUS FROM SOURCE OF CURRENT TO ALL OUTLETS, UNLESS A PROPERLY SIZED GROUNDING CONDUCTOR IS ROUTED WITHIN THE CONDUIT. ALL METALLIC CONDUITS SHALL BE BONDED PER THE ELECTRICAL CODE.
2. ROUTE EXPOSED CONDUIT AND CONDUIT ABOVE SUSPENDED CEILINGS (ACCESSIBLE OR NOT) PARALLEL/PERPENDICULAR TO THE BUILDING STRUCTURAL LINES, AND AS CLOSE TO BUILDING STRUCTURE AS POSSIBLE. WHEREVER POSSIBLE, ROUTE HORIZONTAL CONDUIT RUNS ABOVE WATER AND STEAM PIPING.
3. ROUTE CONDUIT THROUGH ROOF OPENINGS PROVIDED FOR PIPING AND DUCTWORK WHERE POSSIBLE. IF NOT PROVIDED OR ROUTING THROUGH PROVIDED OPENINGS IS NOT POSSIBLE, ROUTE THROUGH ROOF JACK WITH PITCH POCKET. COORDINATE ROOF PENETRATIONS WITH OTHER TRADES.
4. CONDUITS, RACEWAY, AND BOXES SHALL NOT BE INSTALLED IN CONCEALED LOCATIONS IN METAL DECK ROOFING OR LESS THAN 1.5" BELOW BOTTOM OF ROOF DECKING.
5. AVOID MOISTURE TRAPS WHERE POSSIBLE. WHERE UNAVOIDABLE, PROVIDE A JUNCTION BOX WITH DRAIN FITTING AT CONDUIT LOW POINT.
6. ALL CONDUITS THROUGH WALLS SHALL BE GROUTED OR SEALED INTO OPENINGS. WHERE CONDUIT PENETRATES FIREWALLS AND FLOORS, SEAL WITH A UL LISTED SEALANT. SEAL PENETRATIONS WITH INTUMESCENT CAULK, PUTTY, OR SHEET INSTALLED PER MANUFACTURER'S RECOMMENDATIONS. ALL MATERIALS USED TO SEAL PENETRATIONS OF FIREWALLS AND FLOORS SHALL BE TESTED AND CERTIFIED AS A SYSTEM PER ASTM E814 STANDARD FOR FIRE TESTS OR THROUGH-PENETRATION FIRE STOPS AS MANUFACTURED BY 3M OR APPROVED EQUAL.
7. CONTRACTOR SHALL BE RESPONSIBLE FOR ALL OPENINGS REQUIRED IN MASONRY OR EXTERIOR WALLS UNDER THIS DIVISION. A QUALIFIED MASON AT THE EXPENSE OF THIS CONTRACTOR SHALL REPAIR ALL OPENINGS TO MATCH EXISTING CONDITIONS.
8. SEAL INTERIOR OF CONDUIT AT EXTERIOR ENTRIES, AIR HANDLING UNITS, COOLERS/FREEZERS, ETC., AND WHERE THE TEMPERATURE DIFFERENTIAL CAN POTENTIALLY BE GREATER THAN 20°F, TO PREVENT MOISTURE PENETRATION. SEAL SHALL BE PLACED WHERE CONDUIT ENTERS WARM SPACE. CONDUIT SEAL FITTING SHALL BE A DRAIN/SEAL, WITH SEALING COMPOUND, IDENTIFIED FOR USE WITH CABLE AND RACEWAY SYSTEM, EQUAL TO O-Z/GEDNEY TYPE EYD.
9. HORIZONTAL CONDUIT ROUTING THROUGH SLABS ABOVE GRADE
a. CONDUITS, IF RUN IN CONCRETE STRUCTURE, SHALL BE IN MIDDLE ONE-THIRD OF SLAB THICKNESS, AND LEAVE AT LEAST 3" MIN. CONCRETE COVER. CONDUITS SHALL RUN PARALLEL TO EACH OTHER AND SPACED AT LEAST 8" APART CENTERLINE TO CENTERLINE. SECURE RACEWAYS TO REINFORCING RODS TO PREVENT SAGGING OR SHIFTING DURING CONCRETE PLACEMENT. MAXIMUM CONDUIT OUTSIDE DIAMETER 1".
b. NO CONDUITS ARE ALLOWED IN CONCRETE ON METAL DECK UNLESS EXPRESSLY APPROVED IN WRITING BY THE STRUCTURAL ENGINEER.
c. NO CONDUITS ARE ALLOWED TO BE ROUTED HORIZONTALLY THROUGH SLABS ABOVE GRADE.
10. DO NOT ROUTE CONDUITS ACROSS EACH OTHER IN SLABS ON GRADE.
11. RIGID POLYVINYL CHLORIDE CONDUIT (PVC) SHALL BE INSTALLED WHEN MATERIAL SURFACE TEMPERATURES AND AMBIENT TEMPERATURE ARE GREATER THAN 40°F.
12. WHERE RIGID POLYVINYL CHLORIDE CONDUIT (PVC) IS USED BELOW GRADE, IN A SLAB, BELOW A SLAB, ETC., A TRANSITION TO OR PVC-COATED STEEL CONDUIT SHALL BE INSTALLED BEFORE CONDUIT EXITS EARTH. THE CONDUIT SHALL EXTEND A MINIMUM OF 6" INTO THE SURFACE CONCEALING THE NON-METALLIC CONDUIT.
13. CONTRACTOR SHALL PROVIDE SUITABLE MECHANICAL PROTECTION AROUND ALL CONDUITS STUBBED OUT FROM FLOORS, WALLS OR CEILINGS DURING CONSTRUCTION TO PREVENT BENDING OR DAMAGING OF STUBS DUE TO CARELESSNESS WITH CONSTRUCTION EQUIPMENT.
14. CONTRACTOR SHALL PROVIDE A POLYPROPYLENE PULL CORD WITH 2000 LBS. TENSILE STRENGTH IN EACH EMPTY CONDUIT (INDOOR AND OUTDOOR), EXCEPT IN SLEEVES AND NIPPLES.
15. TELECOMMUNICATIONS CONDUITS THAT PROTRUDE THROUGH THE STRUCTURAL FLOOR SHALL BE INSTALLED 1 TO 3" ABOVE FINISHED FLOOR (AFF).
16. TELECOMMUNICATIONS CONDUITS THAT ENTER INTO TELECOMMUNICATIONS ROOMS BELOW THE FINISHED CEILING SHALL TERMINATE A MINIMUM OF 4" BELOW CEILING AND AS CLOSE TO THE WALL AS POSSIBLE.
17. TELECOMMUNICATIONS CONDUITS THAT ARE BELOW GRADE AND ENTER INTO A BUILDING SHALL TERMINATE A MINIMUM OF 4" ABOVE FINISHED FLOOR (AFF) AND AS CLOSE TO THE WALL AS POSSIBLE.

18.05 CONDUIT TERMINATIONS
A. WHERE CONDUIT BONDING IS INDICATED OR REQUIRED IN THE CONTRACT DOCUMENTS, THE BUSHINGS SHALL BE A GROUNDING TYPE SIZED FOR THE CONDUIT AND GROUND BONDING CONDUCTOR AS MANUFACTURED BY O-Z/GEDNEY, APPLETON, THOMAS & BETTS, BURNDY, REGAL, ORBIT INDUSTRIES OR APPROVED EQUAL.
B. CONDUITS WITH TERMINATION FITTINGS SHALL BE THREADED FOR ONE (1) LOCK NUT ON THE OUTSIDE AND ONE (1) LOCK NUT AND BUSHING ON THE INSIDE OF EACH BOX.
C. WHERE CONDUITS TERMINATE IN BOXES WITH KNOCKOUTS, THEY SHALL BE SECURED TO THE BOXES WITH LOCK NUTS AND PROVIDED WITH APPROVED SCREW TYPE TINNED IRON BUSHINGS OR FITTINGS WITH PLASTIC INSERTS.
D. WHERE CONDUITS TERMINATE IN BOXES, FITTINGS, OR BODIES WITH THREADED OPENINGS, THEY SHALL BE TIGHTLY SCREWED AGAINST THE SHOULDER PORTION OF THE THREADED OPENINGS.
E. CONDUIT TERMINATIONS TO ALL MOTORS SHALL BE MADE WITH FLEXIBLE METALLIC CONDUIT (FMC), UNLESS NOTED OTHERWISE. FINAL CONNECTIONS TO ROOF EXHAUST FANS, OR OTHER EXTERIOR MOTORS AND MOTORS IN DAMP OR WET LOCATIONS SHALL BE MADE WITH LIQUIDTIGHT FLEXIBLE METALLIC CONDUIT (LFMC). MOTORS IN HAZARDOUS AREAS, AS DEFINED IN THE ELECTRICAL CODE, SHALL BE CONNECTED USING FLEXIBLE CONDUIT RATED FOR THE ENVIRONMENT. FLEXIBLE CONDUIT SHALL NOT EXCEED 6' IN LENGTH. ROUTE EQUIPMENT GROUND CONDUCTORS FROM CIRCUIT GROUND TO MOTOR GROUND TERMINAL THROUGH FLEXIBLE CONDUIT.
F. RIGID POLYVINYL CHLORIDE CONDUIT (PVC) SHALL BE TERMINATED USING FITTINGS AND BODIES PRODUCED BY THE MANUFACTURER OF THE CONDUIT, UNLESS NOTED OTHERWISE. PREPARE CONDUIT AS PER MANUFACTURER'S RECOMMENDATIONS BEFORE JOINING. ALL JOINTS SHALL BE SOLVENT WELDED BY APPLYING FULL EVEN COAT OF PLASTIC CEMENT TO THE ENTIRE AREAS THAT WILL BE JOINED. TURN THE CONDUIT AT LEAST A QUARTER TO ONE HALF TURN IN THE FITTING AND LET THE JOINT CURE FOR 1-HOUR MINIMUM OR AS PER THE MANUFACTURER'S RECOMMENDATIONS.
G. ALL CONDUIT ENDS SHALL BE SEALED WITH PLASTIC IMMEDIATELY AFTER INSTALLATION TO PREVENT THE ENTRANCE OF ANY FOREIGN MATTER DURING CONSTRUCTION. THE SEALS SHALL BE REMOVED AND THE CONDUITS BLOWN CLEAR OF ALL FOREIGN MATTER PRIOR TO ANY WIRES OR PULL CORDS BEING INSTALLED.

18.06 RIGID POLYVINYL CHLORIDE CONDUIT (PVC) OVERHEAD CONDUIT INSTALLATION
A. CONDUIT SHALL BE INSTALLED AWAY FROM HIGH TEMPERATURE PIPING AND EQUIPMENT.
B. CONDUIT SHALL BE INSTALLED TO PREVENT EXPOSURE TO ULTRAVIOLET RADIATION.
C. PROPER ALLOWANCES SHALL BE MADE FOR EXPANSION AND/OR CONTRACTION OF THE CONDUIT DURING INSTALLATION.
D. EXPANSION FITTINGS SHALL BE INSTALLED IN ANY 100' CONTINUOUS RUN OF CONDUIT AND AT EACH 100' THEREAFTER.
E. SUPPORTS SHALL BE MADE FROM NON-CORRODING MATERIALS AND SPACING SHALL NOT BE GREATER THAN THE LISTING IN THE ELECTRICAL CODE, BUT ALSO SHALL NOT EXCEED THE MANUFACTURER'S RECOMMENDATIONS DEPENDING ON THE EXPECTED SURFACE TEMPERATURE.

18.07 UNDERGROUND CONDUIT INSTALLATION
A. CONDUIT CONNECTIONS:
1. CONDUIT JOINTS IN A MULTIPLE CONDUIT RUN SHALL BE STAGGERED AT LEAST ONE FOOT APART.
B. CONDUIT BENDS (LATERAL):
1. CONDUITS SHALL HAVE LONG SWEEP RADIUS ELBOWS INSTEAD OF STANDARD ELBOWS WHEREVER SPECIAL BENDS ARE INDICATED AND NOTED ON THE DRAWINGS, OR AS REQUIRED BY THE MANUFACTURER OF THE EQUIPMENT OR SYSTEM BEING SERVED.
2. TELECOMMUNICATIONS CONDUIT BEND RADIUS SHALL BE SIX TIMES THE DIAMETER FOR CONDUITS UNDER 2" AND TEN TIMES THE DIAMETER FOR CONDUITS OVER 2". WHERE LONG CABLE RUNS ARE INVOLVED, SIDEWALL PRESSURES MAY REQUIRE LARGER RADIUS BENDS. COORDINATE WITH ARCHITECT/ENGINEER PRIOR TO CONDUIT INSTALLATION TO DETERMINE BEND RADIUS.
C. CONDUIT ELBOWS (VERTICAL):
1. MINIMUM METAL OR RTRC ELBOW RADIUSES SHALL BE 30 INCHES FOR PRIMARY CONDUITS (GREATER THAN 600V) AND 18 INCHES FOR SECONDARY CONDUITS (LESS THAN 600V). INCREASE RADIUS, AS REQUIRED, BASED ON PULLING TENSION CALCULATION REQUIREMENTS.
D. EXPANSION FITTINGS AT FINISHED GRADE: PROVIDE UNDERGROUND RACEWAYS WITH AN EXPANSION FITTING AFTER EMERGING FROM FINISHED GRADE AND EXTERIOR EQUIPMENT PADS. FIELD LOCATE THE EXPANSION FITTING ABOVE AND WITHIN 24 INCHES OF FINISHED GRADE. RACEWAYS EXTENDING LESS THAN 12 INCHES ABOVE FINISHED GRADE, TRANSITIONING TO LFMC WITHIN 12 INCHES OF FINISHED GRADE, AND INTERIOR CONCRETE BUILDING SLABS DO NOT REQUIRE AN EXPANSION FITTING UNLESS REQUIRED BY CODE.
E. CONDUIT PLACEMENT:
1. CONDUIT RUNS SHALL BE PITCHED A MINIMUM OF 4" PER 100 FEET TO DRAIN TOWARD THE TERMINATIONS. DUCT RUNS SHALL BE INSTALLED DEEPER THAN THE MINIMUM WHEREVER REQUIRED TO AVOID ANY CONFLICTS WITH EXISTING OR NEW PIPING, TUNNELS, ETC.
2. FOR PARALLEL RUNS, USE SUITABLE SEPARATORS AND CHAIRS INSTALLED NOT GREATER THAN 4' ON CENTERS. BAND CONDUIT TOGETHER WITH SUITABLE BANDING DEVICES. SECURELY ANCHOR CONDUIT TO PREVENT MOVEMENT DURING CONCRETE PLACEMENT OR BACKFILLING.
3. WHERE CONCRETE IS REQUIRED, THE MATERIALS FOR CONCRETING SHALL BE THOROUGHLY MIXED TO A MINIMUM F'C = 2500 AND IMMEDIATELY PLACED IN THE TRENCH AROUND THE CONDUITS. NO CONCRETE THAT HAS BEEN ALLOWED TO PARTIALLY SET SHALL BE USED.
4. BEFORE THE CONTRACTOR PULLS ANY CABLES INTO THE CONDUIT, CONTRACTOR SHALL HAVE A MANDREL 1/4" SMALLER THAN THE CONDUIT INSIDE DIAMETER PULLED THROUGH EACH CONDUIT AND IF ANY CONCRETE OR OBSTRUCTIONS ARE FOUND, THE CONTRACTOR SHALL REMOVE THEM AND CLEAR THE CONDUIT. SPARE CONDUIT SHALL ALSO BE CLEARED OF ALL OBSTRUCTIONS.
5. CONDUIT TERMINATIONS IN MANHOLES, MASONRY PULL BOXES, OR MASONRY WALLS SHALL BE WITH MALLEABLE IRON END BELL FITTINGS.
6. ALL SPARE CONDUITS NOT TERMINATED IN A COVERED ENCLOSURE SHALL HAVE ITS TERMINATIONS PLUGGED AS DESCRIBED ABOVE.
7. DUCTBANKS AND CONDUIT SHALL BE INSTALLED A MINIMUM OF 24" BELOW FINISHED GRADE, UNLESS OTHERWISE NOTED ON THE DRAWINGS OR ELSEWHERE IN THESE SPECIFICATIONS.
8. ALL NON-METALLIC CONDUIT INSTALLED UNDERGROUND OUTSIDE OF A SLAB SHALL BE RIGID.
F. HORIZONTAL DIRECTIONAL DRILLING:
1. ENTIRE DRILL PATH SHALL BE ACCURATELY SURVEYED, WITH ENTRY AND EXIT STAKES PLACED AND COORDINATED WITH OTHER CONTRACTORS. IF USING A MAGNETIC GUIDANCE SYSTEM, ENTIRE DRILL PATH SHALL BE SURVEYED FOR ANY SURFACE GEO-MAGNETIC VARIATIONS OR ANOMALIES.
2. ANY UTILITY LOCATES WITHIN 20 FEET OF THE BORE PATH SHALL HAVE THE EXACT LOCATION PHYSICALLY VERIFIED BY HAND DIGGING OR VACUUM EXCAVATION. RESTORE INSPECTION HOLES TO ORIGINAL CONDITION AFTER VERIFICATION.
G. RACEWAY SEAL:
1. WHERE A RACEWAY ENTERS A BUILDING OR STRUCTURE, IT SHALL BE SCALED WITH A SEALING BUSHING OR DUCT SEAL TO PREVENT THE ENTRY OF LIQUIDS OR GASES. SEAL MUST BE COMPATIBLE WITH CONDUCTORS AND RACEWAY SYSTEM. SPARE OR UNUSED RACEWAY SHALL BE SEALED.
2. ALL TELECOMMUNICATIONS CONDUITS AND INNERDUCTS, INCLUDING THOSE CONTAINING CABLES, SHALL BE PLUGGED AT THE BUILDING AND VAULT WITH "JACKMOON" OR EQUIVALENT DUCT SEAL, CAPABLE OF WITHSTANDING A 10-FOOT HEAD OF WATER (5 PSI).
3. DUCT SEAL ALTERNATIVE OPTION: INFLATABLE DUCT SEAL SYSTEM. CAPABLE OF WITHSTANDING A 10-FOOT HEAD OF WATER (5 PSEI).
a. MANUFACTURERS:
1) RAYCHEM RAYFLATE DUCT SEALING SYSTEMS RDSS
2) APPROVED EQUAL

18.08 BOX INSTALLATION SCHEDULE
A. GALVANIZED STEEL BOXES MAY BE USED IN:
1. CONCEALED INTERIOR LOCATIONS ABOVE CEILINGS AND IN HOLLOW STUDDED PARTITIONS.
2. EXPOSED INTERIOR LOCATIONS IN MECHANICAL ROOMS AND IN ROOMS WITHOUT CEILINGS; HIGHER THAN 8' ABOVE THE HIGHEST PLATFORM LEVEL.
3. DIRECT CONTACT WITH CONCRETE EXCEPT SLAB ON GRADE.
4. RECESSED IN STUD WALL OF KITCHENS AND LAUNDRIES.
B. CAST BOXES SHALL BE USED IN:
1. EXTERIOR LOCATIONS.
2. HAZARDOUS LOCATIONS.
3. EXPOSED INTERIOR LOCATIONS WITHIN 8' OF THE HIGHEST PLATFORM LEVEL.
4. DIRECT CONTACT WITH EARTH.
5. DIRECT CONTACT WITH CONCRETE IN SLAB ON GRADE.
6. WET LOCATIONS.
7. KITCHENS AND LAUNDRIES WHEN EXPOSED ON WALL SURFACE.

18.09 COORDINATION OF BOX LOCATIONS
A. PROVIDE ELECTRICAL BOXES AS SHOWN ON THE DRAWINGS, AND AS REQUIRED FOR SPLICES, TAPS, WIRE PULLING, EQUIPMENT CONNECTIONS, AND CODE COMPLIANCE.
B. ELECTRICAL BOX LOCATIONS SHOWN ON THE CONTRACT DRAWINGS ARE APPROXIMATE, UNLESS DIMENSIONED. VERIFY LOCATION OF FLOOR BOXES AND OUTLETS IN OFFICES AND WORK AREAS PRIOR TO ROUGH-IN.
C. LOCATE AND INSTALL BOXES TO ALLOW ACCESS. AVOID INTERFERENCES WITH DUCTWORK, PIPING, STRUCTURE, EQUIPMENT, ETC. RECESSED LUMINAIRES SHALL NOT BE USED AS ACCESS TO OUTLET, PULL, AND JUNCTION BOXES. WHERE INSTALLATION IS INACCESSIBLE, PROVIDE ACCESS DOORS. COORDINATE LOCATIONS AND SIZES OF REQUIRED ACCESS DOORS WITH THE ARCHITECT/ENGINEER AND GENERAL CONTRACTOR.
D. LOCATE AND INSTALL TO MAINTAIN HEADROOM AND TO PRESENT A NEAT APPEARANCE.
E. COORDINATE LOCATIONS WITH HEATING CONTRACTOR TO AVOID BASEBOARD RADIATION CABINETS.

18.10 OUTLET BOX INSTALLATION
A. DO NOT INSTALL BOXES BACK-TO-BACK IN WALLS.
1. PROVIDE A MINIMUM HORIZONTAL SEPARATION OF 6 INCHES BETWEEN BOXES INSTALLED ON OPPOSITE SIDES OF NON-RATED STUD WALLS. WHEN THE MINIMUM SEPARATION CANNOT BE MAINTAINED, INSTALL SOUND INSULATION PADS ON ALL FIVE SIDES OF THE BACK BOX IN ACCORDANCE WITH THE MANUFACTURER'S INSTRUCTIONS.
2. PROVIDE A MINIMUM HORIZONTAL SEPARATION OF 24 INCHES BETWEEN BOXES INSTALLED ON OPPOSITE SIDES OF FIRE-RATED WALLS. WHEN THE MINIMUM SEPARATION CANNOT BE MAINTAINED, THE BOX IS GREATER THAN 16 SQUARE INCHES OR THE TOTAL BOX AREA (ALL TRADES) PER 100 SQUARE FEET IS GREATER THAN OR EQUAL TO 100 SQUARE INCHES, INSTALL FIRE-RATED MOLDABLE PADS TO ALL FIVE SIDES OF THE BACK BOX TO MAINTAIN THE FIRE RATING OF THE WALL. INSTALL MOLDABLE PADS IN ACCORDANCE WITH UL LISTING FOR THE SPECIFIC PRODUCT. SOUND INSULATION PADS ARE NOT ACCEPTABLE FOR USE IN FIRE-RATED WALL APPLICATIONS UNLESS THE PRODUCT CARRIES THE NECESSARY FIRE RATING.
B. INSTALL SOUND INSULATION PADS ON ALL FIVE SIDES OF THE BACK OF ALL BOXES IN SOUND-RATED WALL ASSEMBLIES. SOUND-RATED WALL ASSEMBLIES ARE DEFINED AS PARTITION TYPES CARRYING A SOUND TRANSMISSION CLASS (STC) RATING.

LPA
ARCHITECTURE ENGINEERING INTERIOR DESIGN
LANDSCAPE ARCHITECTURE PLANNING
949-261-1001 Office
LPADesignStudios.com
5301 California Avenue, Suite 100
Irvine, California 92617

REGISTERED PROFESSIONAL ENGINEER
NESTOR C. IGNACIO, JR.
Lic. E16934
Exp. 6-30-2027
ELECTRICAL
STATE OF CALIFORNIA

IMEG
www.imegcorp.com
300 NORTH LAKE AVENUE
12TH FLOOR
PASADENA, CA 91101
P: 626.463.2800 F: 626.463.2801
PROJECT #25007252.00

This document and all other project documents, ideas, aesthetics and designs incorporated therein are instruments of service. All project documents are copyright protected, are the property of LPA, Inc. (LPA) and cannot be lawfully used in whole or in part for any project or purpose except as set forth in the contractual agreement between LPA and its Client. The unauthorized disclosure and/or use of the project documents (including the creation of derivative works), may give rise to liability for copyright infringement, unlawful disclosure, use or misappropriation of property rights held by LPA. The unauthorized use of the project documents will give rise to the recovery of monetary losses and damages including attorney fees and costs for which the unauthorized user will be held liable.
Project documents describe the design intent of the work and are not a representation of as-built or existing conditions. LPA is not responsible for any discrepancies between the project documents and the existing conditions.

© LPA, Inc.

ALTADENA ELEMENTARY SCHOOL
743 E Calaveras St,
Altadena, CA 91001
ALTADENA ELEMENTARY SCHOOL

Revision	Date
Addendum 1	04/17/2026

Submittal	Date
100% SCHEMATIC DESIGN	12/05/2025
DSA SUBMITTAL	02/02/2026
DSA SUBMITTAL V2	03/13/2026

33366
Checker

E403

ELECTRICAL SPECIFICATIONS

C. THE CONTRACTOR SHALL ANCHOR SWITCH AND OUTLET BOX TO WALL CONSTRUCTION SO THAT IT IS FLUSH WITH THE FINISHED MASONRY, PANELING, DRYWALL, PLASTER, ETC. THE CONTRACTOR SHALL CHECK THE BOXES AS THE FINISH WALL SURFACE IS BEING INSTALLED TO ASSURE THAT THE BOX IS FLUSH. (PROVIDE PLASTER RINGS AS NECESSARY.)
D. MOUNT AT HEIGHTS SHOWN OR NOTED ON THE DRAWINGS OR AS GENERALLY ACCEPTED IF NOT SPECIFICALLY NOTED.
E. LOCATE BOXES IN MASONRY WALLS TO REQUIRE CUTTING OF MASONRY UNIT CORNER ONLY. COORDINATE MASONRY CUTTING TO ACHIEVE NEAT OPENINGS FOR BOXES.
F. PROVIDE KNOCKOUT CLOSURES FOR UNUSED OPENINGS.
G. SUPPORT BOXES INDEPENDENTLY OF CONDUIT.
H. USE MULTIPLE-GANG BOXES WHERE MORE THAN ONE DEVICE IS MOUNTED TOGETHER; DO NOT USE SECTIONAL BOXES. PROVIDE BARRIERS TO SEPARATE WIRING OF DIFFERENT VOLTAGE SYSTEMS.
I. INSTALL BOXES IN WALLS WITHOUT DAMAGING WALL INSULATION.
J. POSITION OUTLETS TO LOCATE LUMINAIRES AS SHOWN ON REFLECTED CEILING DRAWINGS.
K. PROVIDE RECESSED OUTLET BOXES IN FINISHED AREAS; SECURE BOXES TO INTERIOR WALL AND PARTITION STUDS, ACCURATELY POSITIONED TO ALLOW FOR SURFACE FINISH THICKNESS. USE STAMPED STEEL STUD BRIDGES FOR FLUSH OUTLETS IN HOLLOW STUD WALL, AND ADJUSTABLE STEEL CHANNEL FASTENERS FOR FLUSH CEILING OUTLET BOXES.
L. ALIGN WALL-MOUNTED OUTLET BOXES FOR SWITCHES, THERMOSTATS, AND SIMILAR DEVICES.
M. PROVIDE CAST OUTLET BOXES IN EXTERIOR LOCATIONS AND WET LOCATIONS, AND WHERE EXPOSED RIGID OR INTERMEDIATE CONDUIT IS USED.

18.11 PULL AND JUNCTION BOX INSTALLATION
A. LOCATE PULL BOXES AND JUNCTION BOXES ABOVE ACCESSIBLE CEILINGS OR IN UNFINISHED AREAS.
B. SUPPORT PULL AND JUNCTION BOXES INDEPENDENT OF CONDUIT.
C. DO NOT INSTALL BOXES BACK-TO-BACK IN WALLS.
1. PROVIDE A MINIMUM HORIZONTAL SEPARATION OF 6 INCHES BETWEEN BOXES INSTALLED ON OPPOSITE SIDES OF NON-RATED STUD WALLS. WHEN THE MINIMUM SEPARATION CANNOT BE MAINTAINED, INSTALL SOUND INSULATION PADS ON ALL FIVE SIDES OF THE BACK BOX IN ACCORDANCE WITH THE MANUFACTURER'S INSTRUCTIONS.
2. PROVIDE A MINIMUM HORIZONTAL SEPARATION OF 24 INCHES BETWEEN BOXES INSTALLED ON OPPOSITE SIDES OF FIRE-RATED WALLS. WHEN THE MINIMUM SEPARATION CANNOT BE MAINTAINED, THE BOX IS GREATER THAN 16 SQUARE INCHES OR THE TOTAL BOX AREA (ALL TRADES) PER 100 SQUARE FEET IS GREATER THAN OR EQUAL TO 100 SQUARE INCHES, INSTALL FIRE-RATED MOLDABLE PADS TO ALL FIVE SIDES OF THE BACK BOX TO MAINTAIN THE FIRE RATING OF THE WALL. INSTALL MOLDABLE PADS IN ACCORDANCE WITH UL LISTING FOR THE SPECIFIC PRODUCT. SOUND INSULATION PADS ARE NOT ACCEPTABLE FOR USE IN FIRE-RATED WALL APPLICATIONS UNLESS THE PRODUCT CARRIES THE NECESSARY FIRE RATING.
D. INSTALL SOUND INSULATION PADS ON ALL FIVE SIDES OF THE BACK OF ALL BOXES IN SOUND-RATED WALL ASSEMBLIES. SOUND-RATED WALL ASSEMBLIES ARE DEFINED AS PARTITION TYPES CARRYING A SOUND TRANSMISSION CLASS (STC) RATING.

18.12 EXPOSED BOX INSTALLATION
A. BOXES SHALL BE SECURED TO THE BUILDING STRUCTURE WITH PROPER SIZE SCREWS, BOLTS, HANGER RODS, OR STRUCTURAL STEEL ELEMENTS.
B. ON BRICK, BLOCK AND CONCRETE WALLS OR CEILINGS, EXPOSED BOXES SHALL BE SUPPORTED WITH NO LESS THAN TWO (2) ACKERMAN-JOHNSON, PAINE, PHILLIPS, OR APPROVED EQUAL SCREW ANCHORS OR EXPANSION SHIELDS AND ROUND HEAD MACHINE SCREWS. CAST BOXES SHALL NOT BE DRILLED.
C. ON STEEL STRUCTURES, EXPOSED BOXES SHALL BE SUPPORTED TO THE STEEL MEMBER BY DRILLING AND TAPPING THE MEMBER AND FASTENING THE BOXES BY MEANS OF ROUND HEAD MACHINE SCREWS.
D. BOXES MAY BE SUPPORTED ON STEEL MEMBERS BY APPROVED BEAM CLAMPS IF CONDUIT IS SUPPORTED BY BEAM CLAMPS.
E. BOXES SHALL BE FASTENED TO WOOD STRUCTURES BY MEANS OF A MINIMUM OF TWO (2) WOOD SCREWS ADEQUATELY LARGE AND LONG TO PROPERLY SUPPORT. (QUANTITY DEPENDS ON SIZE OF BOX.)
F. WOOD, PLASTIC, OR FIBER PLUGS SHALL NOT BE USED FOR FASTENINGS.
G. EXPLOSIVE DEVICES SHALL NOT BE USED UNLESS SPECIFICALLY ALLOWED.

END OF SECTION 26 05 33

SECTION 26 05 35 - SURFACE RACEWAYS

PART 19 - GENERAL
19.01 SECTION INCLUDES
A. SURFACE METAL RACEWAYS
19.02 REFERENCES
A. FS W-C-582 - CONDUIT, RACEWAY, METAL, AND FITTING; SURFACE

PART 20 - EXECUTION
20.01 INSTALLATION - SURFACE METAL RACEWAY AND MULTI-OUTLET ASSEMBLY
A. USE FLAT-HEAD SCREWS TO FASTEN CHANNEL TO SURFACES. MOUNT PLUMB AND LEVEL.
B. USE SUITABLE INSULATING BUSHINGS AND INSERTS AT CONNECTIONS TO OUTLETS AND CORNER FITTINGS.
C. MAINTAIN GROUNDING CONTINUITY BETWEEN RACEWAY COMPONENTS TO PROVIDE A CONTINUOUS GROUNDING PATH.
D. FASTENER: USE CLIPS AND STRAPS SUITABLE FOR THE PURPOSE.
E. FIELD CUTS TO BE CLEAN AND STRAIGHT AND USE THE PROPER TOOLS AS RECOMMENDED BY THE SYSTEM MANUFACTURER TO PROHIBIT DAMAGE TO FACTORY FINISH OR RACEWAY. JOINTS TO BE MATCHED SO THERE ARE NO GAPS OR SPACES IN THE COVER. FURNISH AND INSTALL MANUFACTURER'S RACEWAY ACCESSORIES AS NEEDED.
F. PROVIDE CONDUITS TO TECHNOLOGY RACEWAY PER DRAWINGS OR PROVIDE A MINIMUM OF ONE (1) 1-1/4" CONDUIT PER SIX FEET OF ASSEMBLY (MINIMUM 2) TO ABOVE CEILING FOR TECHNOLOGY REQUIREMENTS IF ASSEMBLY HAS TECHNOLOGY RACEWAY (CONTRACTOR SHALL PROVIDE QUANTITIES OF CONDUITS THAT PROVIDE MAXIMUM CAPACITY TO ASSEMBLY). PROVIDE CONDUITS EQUALLY SPACED WITHIN ENTIRE LENGTH OF ASSEMBLY.
G. PROVIDE ONE (1) 3/4" EMPTY CONDUIT PER SIX FEET OF ASSEMBLY (MINIMUM 1) TO ABOVE CEILING FOR FUTURE POWER NEEDS. PROVIDE CONDUITS EQUALLY SPACED WITHIN ENTIRE LENGTH OF ASSEMBLY.

END OF SECTION 26 05 35

SECTION 26 05 73 - POWER SYSTEM STUDY

PART 21 - GENERAL
21.01 SECTION INCLUDES
A. LOW VOLTAGE DISTRIBUTION SYSTEM POWER STUDY.
B. SHORT-CIRCUIT ANALYSIS AND REPORT.
C. SELECTIVE COORDINATION ANALYSIS AND REPORT.
21.02 RELATED SECTIONS
A. SECTION 26 05 00 - BASIC ELECTRICAL REQUIREMENTS
B. SECTION 26 11 00 - SECONDARY UNIT SUBSTATION
C. SECTION 26 23 00 - LOW VOLTAGE SWITCHGEAR
D. SECTION 26 24 13 - SWITCHBOARDS
E. SECTION 26 24 16 - PANELBOARDS
F. SECTION 26 24 22 - INTEGRATED POWER CENTERS
G. SECTION 26 28 11 - ARC REDUCTION EARTHING SYSTEM
21.03 QUALITY ASSURANCE
A. ANALYSES SHALL BE PERFORMED BY AN AGENT AUTHORIZED BY THE MANUFACTURER OF EQUIPMENT SPECIFIED IN THE RELATED SPECIFICATION SECTIONS.
21.04 SUBMITTALS
A. DOCUMENTATION SHALL BEAR THE SEAL/SIGNATURE OF THE LICENSED PROFESSIONAL ENGINEER WHO PERFORMED THE ANALYSIS.
B. THE INPUT FOR THE POWER SYSTEM STUDY SHALL BE BASED ON THE CONTRACT DOCUMENTS, WITH ESTIMATED CONDUCTOR LENGTHS AND FIELD INVESTIGATION OF EXISTING EQUIPMENT TYPES, SIZES, RATINGS PROVIDED BY THE ELECTRICAL CONTRACTOR.
C. DOCUMENTATION OF THE ANALYSES SHALL BE SUBMITTED IN A SINGLE BOUND ELECTRONIC (PDF OR EQUAL) FORMAT AND SHALL ACCOMPANY THE SHOP DRAWING SUBMITTALS FOR EQUIPMENT PROVIDED UNDER THE RELATED WORK SPECIFICATION SECTIONS. THE SUBMITTAL OF THESE RELATED SPECIFICATION SECTIONS WILL NOT BE REVIEWED WITHOUT THIS DOCUMENTATION. SUBMIT A SAMPLE ARC-FLASH HAZARD LABEL FOR OWNER REVIEW AND APPROVAL PRIOR TO PRINTING.
21.05 REFERENCES
A. NFPA 70 - NATIONAL ELECTRICAL CODE (NEC)
B. CEC CALIFORNIA ELECTRICAL CODE
C. NFPA 70E - STANDARD FOR ELECTRICAL SAFETY IN THE WORKPLACE
D. IEEE 1584 - IEEE GUIDE FOR PERFORMING ARC-FLASH HAZARD CALCULATIONS, LATEST VERSION
E. ANSI Z535.4 - PRODUCTS SAFETY SIGNS AND LABELS
21.06 SCOPE
A. PROVIDE A POWER SYSTEM STUDY OF THE ELECTRICAL SYSTEM SHOWN ON THE PLANS. THE STUDY SHALL INCLUDE ARC-FAULT ANALYSIS, SELECTIVE COORDINATION ANALYSIS AND ARC FLASH HAZARD ANALYSIS.
B. CONTRACTOR IS REQUIRED TO PROVIDE A CODE COMPLIANT SELECTIVELY COORDINATED ELECTRICAL SYSTEM. CONTRACTOR SHALL PROVIDE OVERCURRENT PROTECTIVE DEVICES WITH THE APPROPRIATE MODELS, FRAME SIZES, TRIP UNITS, ETC. AS REQUIRED TO PROVIDE A SELECTIVELY COORDINATED SYSTEM.

PART 22 - PRODUCTS
22.01 POWER SYSTEM STUDY
A. POWER SYSTEMS STUDY SHALL BE COMPLETED IN THE LATEST VERSION OF EASY POWER OR PRE-APPROVED EQUIVALENT PROGRAM.
B. POWER SYSTEM STUDIES INCLUDING, BUT NOT LIMITED TO SHORT-CIRCUIT ANALYSIS, SELECTIVE COORDINATION, AND ARC-FLASH ANALYSIS ARE INHERENTLY ITERATIVE IN NATURE. THE INITIAL AND SUBSEQUENT ANALYSIS COMMONLY REQUIRES ENGINEERING EVALUATION, EQUIPMENT MODIFICATION, SETTING ADJUSTMENTS, AND REVISED ANALYSIS REPORT. THE POWER SYSTEM ANALYSIS SCOPE SHALL NOT BE CONSIDERED COMPLETE UNTIL ALL OUTSTANDING ENGINEERING, EQUIPMENT AND DEVICE SETTING SOLUTIONS HAVE BEEN RESOLVED AND DOCUMENTED BY A FINAL REPORT. THE POWER SYSTEM STUDY VENDOR SHALL PROVIDE INCLUSIVE BID PROVISIONS FOR THE INITIAL, SUBSEQUENT, FINAL ANALYSIS AND ASSOCIATED REPORTS.

PART 23 - EXECUTION
23.01 SHORT-CIRCUIT ANALYSIS
A. PROVIDE A COMPLETE SHORT-CIRCUIT ANALYSIS FROM THE UTILITY SERVICE TO AND INCLUDING THE ENTIRE BUILDING DISTRIBUTION AS SHOWN ON THE DRAWINGS.
B. ANALYSIS SHALL INCLUDE THE ENTIRE DISTRIBUTION SYSTEM FROM THE POINT OF CONNECTION TO THE UTILITY POWER SOURCE TO THE DISTRIBUTION PANELS AND BRANCH CIRCUIT PANELBOARDS.
C. SHORT-CIRCUIT ANALYSIS DOCUMENTATION SHALL BE MADE IN ONE-LINE DIAGRAM FORM SHOWING THE MAGNITUDE AND LOCATION OF EACH CALCULATED FAULT. FAULT CURRENT CALCULATIONS SHALL BE MADE AT THE MAIN BUS OF EACH SWITCHBOARD, DISTRIBUTION PANEL, AND BRANCH CIRCUIT PANEL. A SUMMARY OF THE FAULT CURRENTS AVAILABLE SHALL ALSO BE SUBMITTED AND MADE AVAILABLE TO THE AHJ IF REQUESTED.
23.02 ADJUSTMENTS
A. MANUFACTURER'S AUTHORIZED REPRESENTATIVE OR CONTRACTOR SHALL SET ALL ADJUSTABLE PROTECTIVE DEVICES TO VALUES INDICATED IN THE APPROVED COORDINATION STUDY. APPLY SETTINGS PRIOR TO PLACING EQUIPMENT INTO OPERATION. WHEN THE SCOPE OF WORK OR EXECUTION INCLUDES REMODEL OR PHASES CONSTRUCTION, THE CONTRACTOR SHALL ADJUST APPLICABLE SETTINGS AS REQUIRED PRIOR TO EACH SYSTEM COMPONENT PLACED IN OPERATION.
B. WHEREVER THE ARC FLASH INCIDENT ENERGY EXCEEDS ARC FLASH CATEGORY 2 (I.E. GREATER THAN 8 CAL/CM^2), PROVIDE OPTIONS FOR ADJUSTING BREAKER TRIP TIMES, IF POSSIBLE, TO REDUCE ENERGIES TO CATEGORY 2 OR BELOW.

END OF SECTION 26 05 73

SECTION 26 08 01 - COMMISSIONING OF ELECTRICAL

PART 24 - GENERAL
24.01 SECTION INCLUDES
A. DESCRIPTION
B. RESPONSIBILITIES
C. RELATED WORK
D. TEST EQUIPMENT
24.02 DESCRIPTION
A. THE PURPOSE OF THIS SECTION IS TO SPECIFY DIVISION 26 RESPONSIBILITIES IN THE COMMISSIONING PROCESS.
B. THE SYSTEMS TO BE COMMISSIONED ARE THE ELECTRICAL LIGHTING SYSTEMS LISTED IN IECC 2021 SECTION C408 APPLICABLE TO THE PROJECT.
1. LIGHTING AND LIGHTING CONTROLS
24.03 RESPONSIBILITIES
A. COMMISSIONING REQUIRES THE PARTICIPATION OF THE DIVISION 26 CONTRACTOR TO ENSURE THAT ALL SYSTEMS ARE OPERATING IN A MANNER CONSISTENT WITH THE CONTRACT DOCUMENTS. THE GENERAL COMMISSIONING REQUIREMENTS AND COORDINATION ARE DETAILED IN SECTION 01 91 01. DIVISION 26 CONTRACTOR SHALL BE FAMILIAR WITH ALL PARTS OF SECTION 01 91 01 AND SHALL EXECUTE ALL COMMISSIONING RESPONSIBILITIES ASSIGNED TO THEM IN THE CONTRACT DOCUMENTS.
24.04 RELATED WORK
A. SPECIFIC COMMISSIONING REQUIREMENTS ARE GIVEN IN THE FOLLOWING SECTIONS OF THESE SPECIFICATIONS. ALL THE FOLLOWING SECTIONS APPLY TO THE WORK OF THIS SECTION.
1. SECTION 01 78 23 - OPERATIONS AND MAINTENANCE
2. SECTION 01 79 00 - DEMONSTRATION AND TRAINING
3. SECTION 01 91 01 - COMMISSIONING

PART 25 - PRODUCTS
25.01 TEST EQUIPMENT
A. THE CONTRACTOR SHALL PROVIDE ALL TEST EQUIPMENT NECESSARY TO FULFILL THE TESTING REQUIREMENTS OF THIS DIVISION. THIS EQUIPMENT INCLUDES, BUT IS NOT LIMITED TO, THE FOLLOWING:
1. LIGHT METER.
2. DIGITAL MULTIMETER CAPABLE OF MEASURING VOLTAGE (AC/DC), CURRENT, AND RESISTANCE.
B. ALL TESTING EQUIPMENT SHALL BE OF SUFFICIENT QUALITY AND ACCURACY TO TEST AND/OR MEASURE SYSTEM PERFORMANCE WITH THE TOLERANCES SPECIFIED IN THE RELATED SPECIFICATIONS. ALL EQUIPMENT SHALL BE CALIBRATED ACCORDING TO THE MANUFACTURER'S RECOMMENDED INTERVALS AND WHEN DROPPED OR DAMAGED. CALIBRATION TAGS SHALL BE AFFIXED OR CERTIFICATES READILY AVAILABLE.
C. REFER TO SECTION 01 91 01 FOR ADDITIONAL DIVISION 26 REQUIREMENTS.

PART 26 - EXECUTION
A. REFER TO SECTION 01 91 01 FOR ADDITIONAL INFORMATION.

END OF SECTION 26 08 01

SECTION 26 22 00 - DRY TYPE TRANSFORMERS

PART 27 - GENERAL
27.01 SECTION INCLUDES
A. DRY TYPE TWO WINDING TRANSFORMERS (TR-1)
27.02 REFERENCES
A. NEMA - ST 1 - SPECIALTY TRANSFORMERS
B. NEMA ST 20 - DRY TYPE TRANSFORMERS FOR GENERAL APPLICATIONS
C. ANSI/IEEE C57.12.01 - GENERAL REQUIREMENTS FOR DRY TYPE DISTRIBUTION AND POWER TRANSFORMERS
D. ANSI/IEEE C57.12.91 - TEST CODE FOR DRY TYPE DISTRIBUTION AND POWER TRANSFORMERS
E. DEPARTMENT OF ENERGY 10 CFR PART 431 - ENERGY CONSERVATION PROGRAM FOR COMMERCIAL EQUIPMENT: DISTRIBUTION TRANSFORMERS ENERGY CONSERVATION STANDARDS; FINAL RULE.
F. NEMA TP 2 - STANDARD TEST METHOD FOR MEASURING THE ENERGY CONSUMPTION OF DISTRIBUTION TRANSFORMERS
G. NEMA TP 3 - STANDARD FOR THE LABELING OF DISTRIBUTION TRANSFORMER EFFICIENCY
27.03 SUBMITTALS
A. SUBMIT PRODUCT DATA UNDER PROVISIONS OF SECTION 26 05 00.
B. INCLUDE OUTLINE AND SUPPORT POINT DIMENSIONS OF ENCLOSURES AND ACCESSORIES, UNIT WEIGHT, VOLTAGE, KVA, AND IMPEDANCE RATINGS AND CHARACTERISTICS, LOSS DATA, EFFICIENCY AT 35, 50, 75 AND 100 PERCENT RATED LOAD, SOUND LEVEL, TAP CONFIGURATIONS, INSULATION SYSTEM TYPE, AND RATED TEMPERATURE RISE.
27.04 DELIVERY, STORAGE, AND HANDLING
A. STORE AND PROTECT PRODUCTS UNDER PROVISIONS OF SECTION 26 05 00.
B. STORE IN A WARM, DRY LOCATION WITH UNIFORM TEMPERATURE. COVER VENTILATING OPENINGS TO KEEP OUT DUST.
C. HANDLE TRANSFORMERS USING ONLY LIFTING EYES AND BRACKETS PROVIDED FOR THAT PURPOSE. PROTECT UNITS AGAINST ENTRANCE OF RAIN, SLEET, OR SNOW IF HANDLED IN INCLEMENT WEATHER.

PART 28 - PRODUCTS
28.01 DRY TYPE TWO WINDING TRANSFORMERS
A. ACCEPTABLE MANUFACTURERS:
1. SQUARE D 7400 EX##T / SK300##KB SERIES
2. EATON V48M / H48M / B48M SERIES
3. ABB 9T SERIES
B. DRY TYPE TRANSFORMERS: NEMA ST 20, FACTORY-ASSEMBLED, AIR-COOLED DRY TYPE TRANSFORMERS; RATINGS AS SHOWN ON THE DRAWINGS. TRANSFORMERS SUPPLIED UNDER THIS PROJECT SHALL MEET THE US DEPARTMENT OF ENERGY (DOE) 2016 EFFICIENCY REQUIREMENTS OR THE MOST CURRENT DOE CFR IN EFFECT.
C. INSULATION SYSTEM AND AVERAGE WINDING TEMPERATURE RISE FOR RATED KVA AS FOLLOWS:

RATINGS	CLASS	RISE (DEGREE C)
LESS THAN 15	185	AS SHOWN ON THE DRAWINGS
OR HIGHER	220	AS SHOWN ON THE DRAWINGS

D. CASE TEMPERATURE SHALL NOT EXCEED 40°C RISE ABOVE AMBIENT AT ITS WARMEST POINT.
E. WINDING TAPS, TRANSFORMERS LESS THAN 15 KVA: TWO 5 PERCENT BELOW RATED VOLTAGE, FULL CAPACITY TAPS ON PRIMARY WINDING.
F. WINDING TAPS, TRANSFORMERS 15 KVA AND LARGER: TWO (2) 2-1/2% BELOW AND TWO (2) 2-1/2% ABOVE RATED VOLTAGE, FULL CAPACITY TAPS ON PRIMARY WINDING.
G. SOUND LEVELS: AVERAGE AUDIBLE SOUND LEVEL SHALL NOT EXCEED THE VALUES GIVEN BELOW WHEN TESTED TO NEMA ST 20 STANDARDS:

	AVERAGE SOUND LEVEL, DECIBELS			
	SELF-COOLED VENTILATED			SELF-COOLED SEALED
EQUIVALENT WINDING KVA RANGE	K-FACTOR = 1 K-FACTOR = 4 K-FACTOR = 9	K-FACTOR = 13 K-FACTOR = 20	FORCED AIR W/ FANS RUNNING	
0-9	40	40	67	45
9.01-30.00	45	45	67	50
30.01-50.00	45	48	67	50
50.01-150.00	50	53	67	55
150.01-300.00	55	58	67	57
300.01-500.00	60	63	67	59
500.01-700.00	62	65	67	61
700.00-1000.00	64	67	67	63

H. GROUND CORE AND COIL ASSEMBLY TO ENCLOSURE BY MEANS OF A VISIBLE FLEXIBLE COPPER GROUNDING STRAP.
I. COIL CONDUCTORS: CONTINUOUS WINDINGS WITH TERMINATIONS BRAZED OR WELDED.
J. ENCLOSURE: NEMA ST 20; TYPE 1. PROVIDE LIFTING EYES OR BRACKETS.
K. ISOLATE CORE AND COIL FROM ENCLOSURE USING VIBRATION-ABSORBING MOUNTS.
L. NAMEPLATE: NEMA TP 3; INCLUDE TRANSFORMER CONNECTION DATA AND OVERLOAD CAPACITY BASED ON RATED ALLOWABLE TEMPERATURE RISE.
28.02 ACCESSORIES
A. PROVIDE REQUIRED ACCESSORIES AS DESCRIBED BELOW. PROVIDE SCHEDULED ACCESSORIES WHEN LISTED WITH PLAN SCHEDULES. REFER TO PLAN SCHEDULES FOR ADDITIONAL REQUIREMENTS.
B. ELECTRONIC ISOLATION SHIELD:
1. PROVIDE ELECTROSTATIC WINDING SHIELD WITH SEPARATE INSULATED GROUNDING CONNECTION AS SHOWN ON THE DRAWINGS. REQUIRED
C. BARRIERS: PROVIDE FINGER SAFE BARRIERS FOR LINESIDE UNINSULATED AND UNGROUNDED TERMINATIONS AND COMPONENTS WHICH REMAIN ENERGIZED WHEN THE MAIN DISCONNECTING DEVICE IS 'OPEN'. REQUIRED
D. BARRIERS (SERVICE EQUIPMENT): PROVIDE SOLID BARRIERS FOR LINESIDE UNINSULATED AND UNGROUNDED TERMINATIONS AND COMPONENTS WHICH REMAIN ENERGIZED WHEN THE MAIN DISCONNECTING DEVICE IS 'OPEN'. REQUIRED
E. TRANSFORMER DISCONNECT LOCKABLE HASP: PROVIDE CIRCUIT BREAKERS, FUSED SWITCHES, AND DISCONNECTS SERVING TRANSFORMERS WITH A LOCKABLE PADLOCK HASP CAPABLE OF BEING LOCKED IN THE OPEN/CLOSED POSITION. REQUIRED

PART 29 - EXECUTION
29.01 INSTALLATION
A. SET TRANSFORMER PLUMB AND LEVEL.
B. USE FLEXIBLE CONDUIT, 2 FEET MINIMUM LENGTH, FOR CONNECTIONS TO TRANSFORMER CASE. MAKE CONDUIT CONNECTIONS TO SIDE PANEL OF ENCLOSURE.
C. MOUNT TRANSFORMERS ON FOUR 3"X3"X1/2" THICK, 50 DUROMETER RUBBER VIBRATION ISOLATING PADS SUITABLE FOR ISOLATING THE TRANSFORMER NOISE FROM THE BUILDING STRUCTURE.
D. VENTILATED TRANSFORMERS: PROVIDE FACTORY LABEL ON HORIZONTAL SURFACE TO PROHIBIT STORAGE ON TOP, FRONT, OR ADJACENT TO TRANSFORMER.
E. INSTALL PRIMARY, SECONDARY, AND GROUNDING ELECTRODE CONDUCTORS USING FACTORY OR FIELD FABRICATED ENCLOSURE ENTRIES. CONDUCTORS SHALL NOT BE ROUTED THROUGH VENTILATED OPENINGS.
29.02 FIELD QUALITY CONTROL
A. CHECK FOR DAMAGE AND TIGHT CONNECTIONS PRIOR TO ENERGIZING TRANSFORMER.
B. MEASURE PRIMARY AND SECONDARY VOLTAGES AND MAKE APPROPRIATE TAP ADJUSTMENTS. ADJUSTMENTS SHALL BE MADE AT COMPLETION OF PROJECT AND AT APPROXIMATELY 6 MONTHS FOLLOWING PROJECT ACCEPTANCE WHEN REQUESTED BY THE OWNER.

END OF SECTION 26 22 00

SECTION 26 24 16 - PANELBOARDS

PART 30 - GENERAL
30.01 SECTION INCLUDES
A. SERVICE AND DISTRIBUTION PANELBOARDS:
B. FUSIBLE BRANCH CIRCUIT PANELBOARDS: PANEL '###'
30.02 RELATED SECTIONS AND WORK
A. REFER TO THE ELECTRICAL DISTRIBUTION DIAGRAM AND ELECTRICAL SCHEDULES FOR SIZE, RATING, AND CONFIGURATION.
30.03 REFERENCES
A. NEMA AB 1 - MOLDED CASE CIRCUIT BREAKERS
B. NEMA FU 1 - LOW VOLTAGE CARTRIDGE FUSES
C. NEMA KS 1 - ENCLOSED SWITCHES
D. NEMA PB 1 - PANELBOARDS
E. NEMA PB 1.1 - INSTRUCTIONS FOR SAFE INSTALLATION, OPERATION AND MAINTENANCE OF PANELBOARDS RATED 600 VOLTS OR LESS
F. NEMA PB 1.2 - APPLICATION GUIDE FOR GROUND-FAULT PROTECTIVE DEVICES FOR EQUIPMENT
G. UL 248 - LOW-VOLTAGE FUSES
H. UL 67 - PANELBOARDS
30.04 SUBMITTALS
A. SUBMIT SHOP DRAWINGS FOR EQUIPMENT AND COMPONENT DEVICES UNDER PROVISIONS OF SECTION 26 05 00.
B. INCLUDE OUTLINE AND SUPPORT POINT DIMENSIONS, VOLTAGE, MAIN BUS AMPACITY, INTEGRATED SHORT CIRCUIT AMPERE RATING, CIRCUIT BREAKER AND FUSIBLE SWITCH ARRANGEMENT AND SIZES.
C. SELECTIVE COORDINATION STUDY: SUBMIT STUDY TO PROVE THAT ALL ESSENTIAL ELECTRICAL SYSTEMS, EMERGENCY SYSTEMS AND LEGALLY REQUIRED STANDBY SYSTEM PANELBOARDS ARE SELECTIVELY COORDINATED WITH ALL SUPPLY SIDE OVERCURRENT PROTECTIVE DEVICES.
D. ARC ENERGY REDUCTION DOCUMENTATION: SUBMIT DOCUMENTATION TO DEMONSTRATE THE ARC ENERGY REDUCTION SYSTEM IS SET TO OPERATE AT A VALUE BELOW THE AVAILABLE ARCING CURRENT.
E. REFURBISHED BRANCH PANEL ENCLOSURE DOCUMENTATION FOR NEW BRANCH PANELBOARDS INSTALLED IN EXISTING ENCLOSURES.
F. SUBMIT MANUFACTURER'S INSTRUCTIONS UNDER PROVISIONS OF SECTION 26 05 00.
30.05 SPARE PARTS
A. KEYS: FURNISH FOUR (4) EACH TO THE OWNER.
B. FUSES: FURNISH 10% OR A MINIMUM OF THREE (3) SPARE FUSES OF EACH TYPE AND RATING INSTALLED TO THE OWNER.
C. FUSE PULLERS: FURNISH ONE (1) FUSE PULLER TO THE OWNER.

PART 31 - PRODUCTS
31.01 RATINGS
A. DEFINITIONS:
1. SERIES RATED EQUIPMENT SHALL BE DEFINED AS EQUIPMENT THAT CAN ACHIEVE A REQUIRED UL AIC RATING WITH AN UPSTREAM DEVICE SUCH AS A MAIN BREAKER OR A COMBINATION OF DEVICES TO MEET OR EXCEED A REQUIRED UL AIC RATING. ALL SERIES RATED EQUIPMENT SHALL HAVE A PERMANENTLY ATTACHED NAMEPLATE INDICATING THAT DEVICE RATING MUST BE MAINTAINED. SEE SECTION 26 05 53 FOR ADDITIONAL REQUIREMENTS.
2. FULLY RATED EQUIPMENT SHALL BE DEFINED AS EQUIPMENT WHERE ALL DEVICES IN THAT EQUIPMENT SHALL CARRY A MINIMUM OF THE AIC RATING THAT IS SPECIFIED.
B. THE PANELBOARDS FOR THIS PROJECT SHALL BE FULLY RATED UNLESS OTHERWISE SPECIFICALLY NOTED IN THE DRAWINGS OR SPECIFICATIONS.
31.02 MAIN AND DISTRIBUTION PANELBOARDS
A. GENERAL
1. MANUFACTURERS:
a. SQUARE D QMB, I-LINE
b. ABB RELIAGEAR NEXT
c. EATON PRL4, PRL5
B. PANELBOARDS: NEMA PB 1; TYPE AS SHOWN ON THE DRAWINGS.
C. ENCLOSURE: NEMA 3R;
D. PROVIDE CABINET FRONT WITH CONCEALED TRIM CLAMPS AND HINGED TRIM ON DOOR TO ALLOW ACCESS TO WIRING GUTTERS WITHOUT REMOVAL OF TRIM AND FLUSH LOCK. DOOR HARDWARE SHALL PROVIDE SWING CLEAR OPERATION (180-DEGREE SWING). FINISH IN MANUFACTURER'S STANDARD GRAY ENAMEL.
E. PROVIDE PANELBOARDS WITH COPPER BUS, RATINGS AS SCHEDULED ON THE DRAWINGS. PROVIDE COPPER GROUND BUS IN ALL PANELBOARDS.
F. ALL SPACES SHOWN ON THE ONE-LINE DIAGRAM SHALL BE FULLY PREPARED SPACES FOR FUTURE BREAKERS.
G. MINIMUM INTEGRATED SHORT CIRCUIT RATING: 100,000 AMPERES RMS SYMMETRICAL FOR 240-VOLT PANELBOARDS; 50,000 AMPERES RMS SYMMETRICAL FOR 480-VOLT PANELBOARDS, OR AS SHOWN ON THE DRAWINGS.
H. MOLDED CASE CIRCUIT BREAKERS: PROVIDE CIRCUIT BREAKERS WITH INTEGRAL THERMAL AND INSTANTANEOUS MAGNETIC TRIP IN EACH POLE.
I. ARC ENERGY REDUCTION:
1. PROVIDE AN ARC ENERGY REDUCTION SYSTEM TO REDUCE THE CLEARING TIME OF AN ARC FLASH EVENT. THE ARC ENERGY REDUCTION SYSTEM SHALL BE PROVIDED FOR OVERCURRENT PROTECTION DEVICES RATED 1,200 AMPS.
2. ENERGY-REDUCING MAINTENANCE SWITCH: PROVIDE AN ENERGY-REDUCING MAINTENANCE SWITCH VISUAL STATUS INDICATION WHEN ENGAGED. INSTALL THE MAINTENANCE SWITCH IN THE FIRST SECTION OF THE ELECTRICAL EQUIPMENT.
J. SUITABLE FOR USE AS SERVICE ENTRANCE EQUIPMENT. PROVIDE LINE SIDE (SERVICE STYLE) BARRIERS.
31.03 BRANCH CIRCUIT PANELBOARDS
A. GENERAL
1. MANUFACTURERS:
a. SQUARE D NQ, NF
b. ABB A SERIES
c. EATON PRL1, PRL2
B. LIGHTING AND APPLIANCE BRANCH CIRCUIT PANELBOARDS: NEMA PB 1; CIRCUIT BREAKER TYPE.
C. ENCLOSURE: NEMA PB 1; TYPE 1.
D. PROVIDE CABINET FRONT WITH DOOR-IN-DOOR CONSTRUCTION, CONCEALED HINGE, AND FLUSH LOCK ALL KEYED ALIKE.
E. DOOR HARDWARE SHALL PROVIDE SWING CLEAR OPERATION (180-DEGREE SWING). FINISH IN MANUFACTURER'S STANDARD GRAY ENAMEL.
F. PROVIDE PANELBOARDS WITH COPPER BUS, RATINGS AS SCHEDULED ON THE DRAWINGS. PROVIDE COPPER GROUND BUS IN ALL PANELBOARDS.
G. ALL UNLABELED CIRCUITS SHOWN ON THE PANELBOARD SCHEDULE SHALL BE FULLY PREPARED SPACES FOR FUTURE BREAKERS.
H. ALL MULTIPLE-SECTION PANELBOARDS SHALL HAVE THE SAME DIMENSIONAL BACK BOX AND CABINET FRONT SIZE.
I. MINIMUM INTEGRATED SHORT CIRCUIT RATING: AS SHOWN ON THE DRAWINGS.
J. PROVIDE HANDLE LOCK-ON DEVICES FOR ALL BREAKERS SERVING EXIT SIGN AND LIGHTING CIRCUITS WITH EMERGENCY BATTERY UNITS. PROVIDE HANDLE LOCK-ON DEVICES AND RED HANDLES FOR BREAKERS SERVING FIRE ALARM PANELS.
K. MOLDED CASE CIRCUIT BREAKERS: BOLT-ON TYPE THERMAL MAGNETIC TRIP CIRCUIT BREAKERS, WITH COMMON TRIP HANDLE FOR ALL POLES. PROVIDE CIRCUIT BREAKERS UL LISTED AS TYPE SWD FOR LIGHTING CIRCUITS. PROVIDE UL CLASS A GROUND FAULT INTERRUPTER CIRCUIT BREAKERS WHERE SCHEDULED ON THE DRAWINGS. DO NOT USE TANDEM CIRCUIT BREAKERS.
L. SUITABLE FOR USE AS SERVICE ENTRANCE EQUIPMENT. PROVIDE LINE SIDE (SERVICE STYLE) BARRIERS.
31.04 ACCESSORIES
A. PROVIDE REQUIRED ACCESSORIES AS DESCRIBED BELOW. PROVIDE SCHEDULED ACCESSORIES WHEN LISTED WITH PLAN SCHEDULES. REFER TO PLAN SCHEDULES FOR ADDITIONAL REQUIREMENTS.
B. BARRIERS: PROVIDE FINGER SAFE BARRIERS FOR LINESIDE UNINSULATED AND UNGROUNDED TERMINATIONS AND COMPONENTS WHICH REMAIN ENERGIZED WHEN THE MAIN DISCONNECTING DEVICE IS 'OPEN'. REQUIRED

PART 32 - EXECUTION
32.01 INSTALLATION
A. INSTALL PANELBOARDS PLUMB AS INDICATED ON THE DRAWINGS IN CONFORMANCE WITH NEMA PB 1.1.
B. HEIGHT: 6 FEET TO HANDLE OF HIGHEST DEVICE.
C. PROVIDE FILLER PLATES FOR UNUSED SPACES IN PANELBOARDS.
D. PROVIDE CUSTOM TYPED CIRCUIT DIRECTORY FOR EACH BRANCH CIRCUIT PANELBOARD. LABEL SHALL INCLUDE EQUIPMENT NAME OR FINAL APPROVED ROOM NAME, ROOM NUMBER, AND LOAD TYPE FOR EACH CIRCUIT (EXAMPLES: SUMP SP-1 OR ROOM 101 RECEPT). REVISE DIRECTORY TO REFLECT CIRCUIT CHANGES REQUIRED TO BALANCE PHASE LOADS. PRINTED COPIES OF THE BID DOCUMENT PANEL SCHEDULES ARE NOT ACCEPTABLE AS CIRCUIT DIRECTORIES.
E. STUB FIVE (5) EMPTY ONE-INCH CONDUITS TO ACCESSIBLE LOCATION ABOVE CEILING OUT OF EACH RECESSED PANELBOARD.
32.02 FIELD QUALITY CONTROL
A. MEASURE STEADY STATE LOAD CURRENTS AT EACH PANELBOARD FEEDER. SHOULD THE DIFFERENCE AT ANY PANELBOARD BETWEEN PHASES EXCEED 20 PERCENT, REARRANGE CIRCUITS IN THE PANELBOARD TO BALANCE THE PHASE LOADS WITHIN 20 PERCENT. TAKE CARE TO MAINTAIN PROPER PHASING FOR MULTI-WIRE BRANCH CIRCUITS.
B. VISUAL AND MECHANICAL INSPECTION: INSPECT FOR PHYSICAL DAMAGE, PROPER ALIGNMENT, ANCHORAGE, AND GROUNDING. CHECK PROPER INSTALLATION AND TIGHTNESS OF CONNECTIONS FOR CIRCUIT BREAKERS, FUSIBLE SWITCHES, AND FUSES.

END OF SECTION 26 24 16

SECTION 26 27 29 - ELECTRIC VEHICLE CHARGING STATION

PART 33 - GENERAL
33.01 SECTION INCLUDES
A. ELECTRIC VEHICLE CHARGING STATIONS:
B. ENERGY LOAD MANAGEMENT FOR ELECTRIC VEHICLE CHARGING STATIONS
33.02 REFERENCES
A. THE EQUIPMENT AND COMPONENTS IN THIS SPECIFICATION SHALL BE DESIGNED AND MANUFACTURED ACCORDING TO THE LATEST REVISION OF THE FOLLOWING STANDARDS (UNLESS OTHERWISE NOTED):
1. SAE J1772 STANDARD FOR ELECTRIC VEHICLE CONDUCTIVE CHARGE COUPLER
2. ELECTRICAL CODE ARTICLE 625 ELECTRIC VEHICLE CHARGING SYSTEMS
3. CEC CALIFORNIA ELECTRICAL CODE ELECTRIC VEHICLE CHARGING SYSTEMS
4. UL 2202, ELECTRIC VEHICLE (EV) CHARGING SYSTEM EQUIPMENT
5. UL 2231, PERSONNEL PROTECTION SYSTEMS FOR ELECTRIC VEHICLE (EV) SUPPLY CIRCUITS
6. UL 2251, PLUGS, RECEPTACLES AND COUPLERS FOR ELECTRIC VEHICLES
7. UL 2594, ELECTRIC VEHICLE SUPPLY EQUIPMENT
8. UL AND CUL LISTED
9. ISO 15693
33.03 SUBMITTALS
A. SUBMIT PRODUCT DATA UNDER PROVISIONS OF SECTION 26 05 00.
B. PROVIDE PRODUCT DATA SHOWING CONFIGURATIONS, FINISHES, DIMENSIONS, CABLE, AND COUPLING INFORMATION.
C. PROVIDE MANUFACTURER INSTALLATION, OPERATION, AND MAINTENANCE INSTRUCTIONS.
D. CELLULAR NETWORK AND GATEWAY PLAN: SUBMIT MANUFACTURER CELLULAR NETWORK AND GATEWAY SITE PLAN FOR RFID AND REVENUE GENERATION COMMUNICATION. THE MANUFACTURER SITE PLAN SHALL CLEARLY IDENTIFY THE FOLLOWING:
1. LOCATION OF GATEWAY ENABLED STATIONS
2. LOCATION OF NON-GATEWAY ENABLED STATIONS
3. MANUFACTURER APPROVAL OF GATEWAY AND NON-GATEWAY ENABLED STATIONS TO ENSURE UNOBSTRUCTED COMMUNICATION BETWEEN STATIONS TYPES.
E. SUBMIT RFID SOFTWARE, HARDWARE, AND RFID CARD INFORMATION.
F. ENERGY LOAD MANAGEMENT:
1. SUBMIT OVERALL DIAGRAM OF SYSTEM NETWORK INCLUDING METERS, COMMUNICATION / ETHERNET SWITCHES, EV CHARGE STATIONS, RELATED POWER DISTRIBUTION EQUIPMENT, SYSTEM HEAD-END, WIRING AND CABLING.
2. PROVIDE DESCRIPTION OF OVERALL SYSTEM, USER INTERFACE, AND SYSTEM.
33.04 DELIVERY, STORAGE, AND HANDLING
A. CONTRACTOR SHALL INSPECT AND REPORT FOR DAMAGE.
B. CONTRACTOR SHALL STORE IN A CLEAN, DRY SPACE. COVER WITH HEAVY CANVAS OR PLASTIC TO KEEP OUT DIRT, WATER, CONSTRUCTION DEBRIS, AND TRAFFIC. HEAT ENCLOSURES TO PREVENT CONDENSATION.
C. CONTRACTOR SHALL HANDLE IN ACCORDANCE WITH MANUFACTURER'S RECOMMENDATIONS TO AVOID DAMAGING EQUIPMENT, INSTALLED DEVICES, AND FINISH.
D. CONTRACTOR SHALL STORE, PROTECT, AND HANDLE PRODUCTS IN ACCORDANCE WITH RECOMMENDED PRACTICES LISTED IN MANUFACTURER'S INSTALLATION AND MAINTENANCE MANUALS.

PART 34 - PRODUCTS
34.01 ELECTRIC VEHICLE CHARGING STATION
A. PLAN IDENTIFICATION:
1. ELECTRIC VEHICLE CHARGING STATION, SINGLE PORT TYPE.
3. ELECTRIC VEHICLE CHARGING STATION, DUAL PORT TYPE.
B. APPROVED MANUFACTURERS:
1. DUAL PORT CHARGING STATION PEDESTAL STYLE:
a. CHARGE POINT CT6000 SERIES
2. SINGLE PORT CHARGING STATION WALL-MOUNTED STYLE
a. CHARGE POINT CT6000 / CPF50 SERIES
C. ELECTRIC VEHICLE (EV) CHARGING STATION, LEVEL 2 CHARGING, WITH LCD DISPLAY, LED DISPLAY FOR CHARGING STATUS, FAULT INDICATION, POWER AVAILABLE, INTERNAL GROUND FAULT PROTECTION 20MA, INTEGRATED SINGLE PHASE REVENUE GRADE METER, ANTI-NUISANCE TRIPPING, AND RE-CLOSURE FEATURE, LISTED.
1. ENCLOSURE CONSTRUCTION: MINIMUM NEMA 3R
2. SYSTEM SUPPLY: 80 AMP, 208-VOLT, SINGLE PHASE, 60HZ.
3. CABLE / CONNECTOR: USABLE CABLE TO NOT EXCEED 25FT, UNLESS EQUIPPED WITH A CABLE MANAGEMENT SYSTEM. SAE J1772 COMPLIANT CONNECTOR. PROVIDE COMPLETE WITH CABLE/CONNECTOR SUPPORT WHILE NOT IN USE BRACKET.
4. ENVIRONMENT: WET LOCATION, -22°F TO 122°F
D. ELECTRONICS - COMMUNICATION:
1. WI-FI / WIRELESS CELLULAR NETWORK CONNECTION
2. ETHERNET NETWORK GATEWAY: PROVIDE IDENTIFIED STATION WITH NETWORK GATEWAY WHEN APPLICABLE.

PART 35 - EXECUTION
35.01 INSTALLATION
A. PROVIDE CONCRETE PAD AND MOW APRON FOR PEDESTAL INSTALLATION.
B. PLACEMENT:
1. VERIFY FIELD MEASUREMENTS WITH CIVIL AND ARCHITECTURAL PLANS.
2. INSTALL PEDESTAL 12 INCHES BEHIND CONCRETE CURB / PAVING LIMITS OR AS DIRECTED BY THE MANUFACTURER.
3. CENTER PEDESTAL IN SITE ISLANDS 24 INCHES OR LESS IN WIDTH.
4. CENTER DUAL PORT PEDESTALS BETWEEN PARKING STALLS. ALIGN WITH VEHICLE PARKING LINES.
C. GROUNDING ROD: PROVIDE 5/8 X 10'-0" COPPER CLAD STEEL GROUND ROD FOR EACH PEDESTAL, INSTALLED 12 INCHES BELOW FINISHED GRADE. PROVIDE BARE #6 GROUND WIRE WITH EXOTHERMIC WELD FOR BONDING TO EVCS PEDESTAL.
D. LABELING: PROVIDE PANEL AND CIRCUIT LABEL FOR ALL CIRCUITS SERVING THE ELECTRIC VEHICLE CHARGING STATION. LOCATE CIRCUIT LABELS ON THE INSIDE UTILITY ACCESS COVER FOR THE CHARGING STATION.
E. ETHERNET CONNECTIONS: PROVIDE FINAL ETHERNET CABLE AND TERMINATIONS PER MANUFACTURER INSTRUCTIONS.
F. CELLULAR NETWORK: PROVIDE SETUP, TESTING, AND CONFIGURATION OF CELLULAR NETWORK PER MANUFACTURER INSTRUCTIONS.
G. DISCONNECTING MEANS (DISCONNECTING MEANS NEC 625.43, WHERE APPLICABLE):
1. DISCONNECTING MEANS. FOR ELECTRIC VEHICLE SUPPLY EQUIPMENT RATED MORE THAN 60 AMPERES OR MORE THAN 150 VOLTS TO GROUND, THE DISCONNECTING MEANS SHALL BE PROVIDED AND INSTALLED IN A READILY ACCESSIBLE LOCATION. THE DISCONNECTING MEANS SHALL BE CAPABLE OF BEING LOCKED IN THE OPEN POSITION. THE PROVISION FOR LOCKING OR ADDING A LOCK TO THE DISCONNECTING MEANS SHALL BE INSTALLED ON OR AT THE SWITCH OR CIRCUIT BREAKER USED AS THE DISCONNECTING MEANS AND SHALL REMAIN IN PLACE WITH OR WITHOUT THE LOCK INSTALLED. PORTABLE MEANS FOR ADDING A LOCK TO THE SWITCH OR CIRCUIT BREAKER SHALL NOT BE PERMITTED.
35.02 OWNER TRAINING AND SYSTEM COMMISSIONING:
A. PROVIDE FACTORY REPRESENTATIVE FOR OWNER TRAINING AND DEMONSTRATION OF THE SYSTEM. OWNER TRAINING SHALL INCLUDE SERVICE, MAINTENANCE, TROUBLESHOOTING, AND GENERAL OPERATION OF SYSTEM. THE FACTORY REPRESENTATIVE SHALL ALSO PROVIDE CUSTOMER IN-PERSON TRAINING/SUPPORT FOR THE FOLLOWING:
1. CELLULAR NETWORK REGISTRATION, INITIALIZATION, AND TESTING

END OF SECTION 26 27 29

SECTION 26 28 13 - FUSES

PART 36 - GENERAL
36.01 SECTION INCLUDES
A. FUSES
B. SPARE FUSE CABINET
36.02 REFERENCES
A. UL 198C - HIGH-INTERRUPTING CAPACITY FUSES; CURRENT LIMITING TYPES
B. UL 198E - CLASS R FUSES
C. FS W-F-870 - FUSEHOLDERS (FOR PLUG AND ENCLOSED CARTRIDGE FUSES)
D. NEMA FU 1 - LOW VOLTAGE CARTRIDGE FUSES
E. NFPA 70 - NATIONAL ELECTRICAL CODE (NEC)
F. CEC CALIFORNIA ELECTRICAL CODE
36.03 SUBMITTALS
A. SUBMIT PRODUCT DATA UNDER PROVISIONS OF SECTION 26 05 00.
36.04 EXTRA MATERIALS
A. PROVIDE TWO FUSE PULLERS.
B. PROVIDE THREE OF EACH SIZE AND TYPE OF FUSE INSTALLED.
36.05 PROJECT CONDITIONS
A. WHERE AMBIENT TEMPERATURE TO WHICH FUSES ARE DIRECTLY EXPOSED IS LESS THAN 40°F OR MORE THAN 100°F, APPLY MANUFACTURER'S AMBIENT TEMPERATURE ADJUSTMENT FACTORS TO FUSE RATINGS.

PART 37 - PRODUCTS
37.01 MANUFACTURERS - FUSES
A. BUSSMAN, DIVISION OF EATON
B. EDISON FUSE, DIVISION OF COOPER INDUSTRIES
C. MERSEN
D. LITTELFUSE INC
37.02 FUSES
A. DIMENSIONS AND PERFORMANCE: NEMA FU 1, CLASS AS SPECIFIED OR INDICATED.
B. VOLTAGE: PROVIDE FUSES WITH VOLTAGE RATING SUITABLE FOR CIRCUIT PHASE-TO-PHASE VOLTAGE.
C. FUSES WITH RATINGS LARGER THAN 600 AMPERES: CLASS L (TIME DELAY), UNLESS OTHERWISE NOTED ON THE DRAWINGS.
D. FUSES WITH RATINGS LARGER THAN 200 AMPERES BUT EQUAL TO OR LESS THAN 600 AMPERES: CLASS RK-1 (TIME DELAY), UNLESS OTHERWISE NOTED ON THE DRAWINGS.
E. FUSES WITH RATINGS LESS THAN OR EQUAL TO 200 AMPERES (NOT INCLUDING CONTROL TRANSFORMER FUSES): CLASS RK-5, UNLESS OTHERWISE NOTED ON THE DRAWINGS.
F. CONTROL TRANSFORMER FUSES: CLASS CC (TIME DELAY).
G. FUSES FOR PACKAGED EQUIPMENT: SIZE AND TYPE AS RECOMMENDED BY EQUIPMENT MANUFACTURER.

LPA
ARCHITECTURE ENGINEERING INTERIOR DESIGN LANDSCAPE ARCHITECTURE PLANNING
949-261-1001 Office
LPADesignStudios.com
5301 California Avenue, Suite 100
Irvine, California 92617

REGISTERED PROFESSIONAL ENGINEER NESTOR C. IGNACIO, JR. Lic. E16934 Exp. 6-30-2027 ELECTRICAL STATE OF CALIFORNIA

IMEG
www.imegcorp.com
300 NORTH LAKE AVENUE
12TH FLOOR
PASADENA, CA 91101
P: 626.463.2800 F: 626.463.2801
PROJECT #25007252.00

This document and all other project documents, ideas, aesthetics and designs incorporated therein are instruments of service. All project documents are copyright protected, are the property of LPA, Inc. (LPA) and cannot be lawfully used in whole or in part for any project or purpose except as set forth in the contractual agreement between LPA and its Client. The unauthorized disclosure and/or use of the project documents (including the creation of derivative works), may give rise to liability for copyright infringement, unlawful disclosure, use or misappropriation of property rights held by LPA. The unauthorized use of the project documents will give rise to the recovery of monetary losses and damages including attorney fees and costs for which the unauthorized user will be held liable.
Project documents describe the design intent of the work and are not a representation of as-built or existing conditions. LPA is not responsible for any discrepancies between the project documents and the existing conditions.

© LPA, Inc.

ALTADENA ELEMENTARY SCHOOL
743 E Calaveras St,
Altadena, CA 91001
ALTADENA ELEMENTARY SCHOOL

Revision	Date
Addendum 1	04/17/2026

Submittal	Date
100% SCHEMATIC DESIGN	12/05/2025
DSA SUBMITTAL	02/02/2026
DSA SUBMITTAL V2	03/13/2026

33366
Checker

E404

ELECTRICAL SPECIFICATIONS

37.03 SPARE FUSE CABINET

A. CABINET: WALL-MOUNTED, 0.05-INCH- THICK STEEL UNIT WITH FULL-LENGTH, RECESSED PIANO-HINGED DOOR AND KEY-CODED CAM LOCK AND PULL.

1. SIZE: ADEQUATE FOR STORAGE OF SPARE FUSES SPECIFIED WITH 15 PERCENT SPARE CAPACITY MINIMUM.
2. FINISH: GRAY, BAKED ENAMEL.
3. IDENTIFICATION: "SPARE FUSES" IN 1-1/2-INCH- HIGH LETTERS ON EXTERIOR OF DOOR.
4. FUSE PULLERS: FOR EACH SIZE OF FUSE.

PART 38 - EXECUTION

38.01 INSTALLATION

A. INSTALL FUSES WHERE INDICATED ON THE DRAWINGS AND SPECIFICATIONS.

B. INSTALL FUSES IN ACCORDANCE WITH MANUFACTURER'S INSTRUCTION.

C. INSTALL FUSES IN PACKAGED EQUIPMENT AS REQUIRED BY EQUIPMENT MANUFACTURER.

D. INSTALL FUSE WITH LABEL ORIENTED SUCH THAT MANUFACTURER, TYPE, AND SIZE ARE EASILY READ.

END OF SECTION 26 28 13

SECTION 26 28 16 - DISCONNECT SWITCHES

PART 39 - GENERAL

39.01 SECTION INCLUDES

A. FUSIBLE SWITCHES

B. NON-FUSIBLE SWITCHES

C. MOLDED CASE CIRCUIT SWITCHES

D. ENCLOSURES

39.02 RELATED SECTIONS AND WORK

A. REFER TO THE DISCONNECT AND STARTER SCHEDULE FOR RATING AND CONFIGURATION.

39.03 REFERENCES

A. NEMA KS 1 - ENCLOSED SWITCHES

39.04 SUBMITTALS

A. SUBMIT PRODUCT DATA UNDER PROVISIONS OF SECTION 26 05 00.

B. PRODUCT DATA: FOR EACH TYPE OF ENCLOSED SWITCH, CIRCUIT BREAKERS, ACCESSORY AND COMPONENT INDICATED, INCLUDE DIMENSIONS, WEIGHTS, AND MANUFACTURER'S TECHNICAL DATA ON FEATURES, PERFORMANCE, AND RATINGS.

C. ELECTRICAL CHARACTERISTICS: FOR EACH TYPE OF ENCLOSED SWITCH, ENCLOSURE TYPES, CURRENT AND VOLTAGE RATINGS, SHORT-CIRCUIT CURRENT RATINGS, UL LISTING FOR SERIES RATING OF INSTALLED DEVICES, FEATURES, CHARACTERISTICS, RATINGS, AND FACTORY SETTINGS OF INDIVIDUAL OVERCURRENT PROTECTIVE DEVICES AND AUXILIARY COMPONENTS.

39.05 COORDINATION

A. COORDINATE LAYOUT AND INSTALLATION OF SWITCHES, CIRCUIT BREAKERS, AND COMPONENTS WITH OTHER CONSTRUCTION, INCLUDING CONDUIT, PIPING, EQUIPMENT, AND ADJACENT SURFACES. MAINTAIN REQUIRED WORKSPACE CLEARANCES AND REQUIRED CLEARANCES FOR EQUIPMENT ACCESS DOORS AND PANELS.

PART 40 - PRODUCTS

40.01 FUSIBLE AND NON-FUSIBLE SWITCHES

A. ACCEPTABLE MANUFACTURERS:

1. SQUARE D 3110 SERIES
2. EATON DH SERIES
3. ABB TH SERIES

B. FUSIBLE SWITCH ASSEMBLIES: NEMA KS 1; TYPE HEAVY DUTY, QUICK-MAKE, QUICK-BREAK, LOAD INTERRUPTER ENCLOSED KNIFE SWITCH WITH EXTERNALLY OPERABLE HANDLE INTERLOCKED TO PREVENT OPENING FRONT COVER WITH SWITCH IN ON POSITION WITHOUT A TOOL. HANDLE LOCKABLE IN OFF POSITION. FUSE CLIPS: CLASS "R" FUSE CLIPS ONLY, UNLESS INDICATED OTHERWISE ON THE DRAWINGS.

C. DS-#; NON-FUSIBLE SWITCH ASSEMBLIES: NEMA KS 1; TYPE HEAVY DUTY, QUICK-MAKE, QUICK-BREAK, LOAD INTERRUPTER ENCLOSED KNIFE SWITCH WITH EXTERNALLY OPERABLE HANDLE INTERLOCKED TO PREVENT OPENING FRONT COVER WITH SWITCH IN ON POSITION WITHOUT A TOOL. HANDLE LOCKABLE IN OFF POSITION.

D. ENCLOSURES: TYPE AS INDICATED ON THE DISCONNECT SCHEDULE.

E. ACCESSORIES: PROVIDE THE FOLLOWING ACCESSORIES. REFER TO DISCONNECT SCHEDULE FOR ADDITIONAL REQUIREMENTS FOR EACH APPLICATION.

1. LOCKABLE
2. PROVIDE FINGER SAFE BARRIERS FOR EXPOSED LINE-SIDE TERMINATIONS AND ENERGIZED COMPONENTS WHEN THE SWITCH IS IN THE OPEN POSITION.

40.02 MOLDED CASE CIRCUIT BREAKERS AND SWITCHES

A. ACCEPTABLE MANUFACTURERS:

1. SQUARE D
2. EATON
3. ABB

B. MOLDED CASE CIRCUIT BREAKER: NEMA AB 1, WITH INTERRUPTING CAPACITY TO MEET AVAILABLE FAULT CURRENTS.

1. ADJUSTABLE INSTANTANEOUS TRIP CIRCUIT BREAKERS: MAGNETIC TRIP ELEMENT WITH FRONT-MOUNTED, FIELD-ADJUSTABLE TRIP SETTINGS.

C. ACCESSORIES: PROVIDE THE FOLLOWING ACCESSORIES. REFER TO DISCONNECT SCHEDULE FOR ADDITIONAL REQUIREMENTS FOR EACH APPLICATION.

1. LOCKABLE
2. PROVIDE FINGER SAFE BARRIERS FOR EXPOSED LINE-SIDE TERMINATIONS AND ENERGIZED COMPONENTS WHEN THE SWITCH IS IN THE OPEN POSITION.

PART 41 - EXECUTION

41.01 INSTALLATION

A. INSTALL DISCONNECT SWITCHES WHERE INDICATED ON THE DRAWINGS.

B. INSTALL FUSES IN FUSIBLE DISCONNECT SWITCHES.

C. FIELD COORDINATE INSTALLATION WITH OTHER CONTRACTORS AND EQUIPMENT TO MAINTAIN CODE REQUIRED WORKING SPACE REQUIREMENTS.

D. PROVIDE ADHESIVE LABEL ON INSIDE DOOR OF EACH SWITCH INDICATING UL FUSE CLASS AND SIZE FOR REPLACEMENT.

41.02 ADJUSTING

A. SET FIELD-ADJUSTABLE CIRCUIT BREAKER TRIP RANGES.

END OF SECTION 26 28 16

SECTION 263100 - SOLAR PHOTOVOLTAIC SYSTEMS

PART 1 - GENERAL

1.1 SECTION INCLUDES

A. PHOTOVOLTAIC PANELS AND ARRAYS

B. PHOTOVOLTAIC GRID TIE STRING INVERTER

C. COMBINER/DISCONNECT

1.2 QUALITY ASSURANCE

A. MANUFACTURER: COMPANY SPECIALIZING IN PHOTOVOLTAIC PANEL OR INVERTER SYSTEMS WITH FIVE YEARS DOCUMENTED EXPERIENCE.

B. OPERATE, COMMISSION, AND DEMONSTRATE SEVEN (7) DAYS OF COMPLETE PHOTOVOLTAIC SYSTEM OPERATION PRIOR TO TURNOVER TO THE OWNER.

1. REFER TO THE PART 3 FOR SYSTEM COMMISSIONING REQUIREMENTS.

1.3 REFERENCES

A. ANSI C62.41 - IEEE RECOMMENDED PRACTICE FOR SURGE VOLTAGES IN LOW-VOLTAGE AC POWER CIRCUITS

B. IEEE 519 - RECOMMENDED PRACTICES AND REQUIREMENTS FOR HARMONIC CONTROL IN ELECTRICAL POWER SYSTEMS.

C. IEEE 929 - RECOMMENDED PRACTICES FOR UTILITY INTERFACE OF PHOTOVOLTAIC SYSTEMS.

D. IEEE 1547 - STANDARD FOR INTERCONNECTING DISTRIBUTED RESOURCES WITH ELECTRONIC POWER SYSTEMS.

E. IEEE 1547.1 - STANDARD FOR CONFORMANCE TEST PROCEDURES FOR EQUIPMENT INTERCONNECTING DISTRIBUTED RESOURCES WITH ELECTRIC POWER SYSTEMS.

F. CEC CALIFORNIA ELECTRICAL CODE

G. UL 1703 - STANDARD FOR FLAT-PLATE PHOTOVOLTAIC MODULES AND PANELS

H. UL 1741 - STANDARD FOR INVERTERS, CONVERTERS, CONTROLLERS AND INTERCONNECTION SYSTEM EQUIPMENT FOR USE WITH DISTRIBUTED ENERGY RESOURCES

I. UL 1998 - STANDARD FOR SOFTWARE IN PROGRAMMABLE COMPONENTS

1.4 SUBMITTALS

A. SUBMIT PRODUCT DATA UNDER PROVISION OF SECTION 260500.

B. PHOTOVOLTAIC PANELS: INCLUDE UNIT DIMENSIONS, WEIGHT, MATERIAL CONSTRUCTION, WATTAGE, VOLTAGE, CURRENT, OPEN CIRCUIT VOLTAGE, SHORT CIRCUIT CURRENT, INSTALLATION AND MAINTENANCE INFORMATION, AND MANUFACTURER VOLTAGE CORRECTION FACTOR IN INFORMATION.

C. PHOTOVOLTAIC INVERTER: INCLUDE UNIT DIMENSIONS, WEIGHT, INSTALLATION AND MAINTENANCE INFORMATION. ALSO INCLUDE THE FOLLOWING:

1. INPUT: DC VOLTAGE RANGE, MAX CURRENT INPUT.
2. OUTPUT: AC VOLTAGE RANGE, TOTAL HARMONIC DISTORTION, POWER FACTOR, EFFICIENCY, MAXIMUM CURRENT OUTPUT.
3. GENERAL: POWER CONSUMPTION, ENCLOSURE TYPE, COMPLIANCE WITH REFERENCES.
4. ENVIRONMENT: AMBIENT TEMPERATURE RATING, COOLING REQUIREMENTS.

D. ROOF MOUNTED SYSTEM CERTIFICATION LETTER, SIGNED BY CONTRACTOR, THAT THE ROOF ADHESIVES, FASTENERS, HARDWARE, AND ACCESSORIES ARE APPROVED BY MANUFACTURERS OF BOTH THE ROOFING SYSTEM AND THE PHOTOVOLTAIC SYSTEM.

E. PROVIDE A LIST OF MANUFACTURER AND MODEL FOR PHOTOVOLTAIC PANELS, POWER OPTIMIZERS, INVERTERS AND RACKING SYSTEM WITH BID FORM FOR EVALUATION.

1.5 SYSTEM DESCRIPTION

A. COMPLETE PHOTOVOLTAIC SYSTEM RATED 100 KW 1000 VOLT DC AT STC INCLUDING PHOTOVOLTAIC PANELS, INVERTER SYSTEM, COMBINER/DISCONNECTS, METERING, AND REPORTING EQUIPMENT. SYSTEMS SHALL BE CONFIGURED TO PRODUCE 480Y/277 3 PHASE 4 WIRE 60 HZ POWER.

B. GRID-TIE INTERCONNECTION WITH UTILITY, INCLUDING ISLAND PROTECTION AND NET METERING.

C. THE PHOTOVOLTAIC SYSTEM SHALL INCLUDE A METERING SYSTEM FOR TOTAL SYSTEM POWER PRODUCTION AND A REPORTING SYSTEM TO MONITOR INDIVIDUAL COMPONENTS.

D. THE PHOTOVOLTAIC SYSTEM AND INVERTER SHALL BE CONFIGURED AS A GRID INTER-TIE SOLAR PHOTOVOLTAIC SYSTEM. THE INDIVIDUAL INVERTERS SHALL AUTOMATICALLY DE-ENERGIZE THEIR OUTPUT TO THE BUILDING ELECTRICAL SYSTEM AND DISCONNECT FROM THE PHOTOVOLTAIC PANELS UPON LOSS OF THE UTILITY ELECTRICAL SERVICE. THE PHOTOVOLTAIC INVERTER SYSTEM SHALL REMAIN DISCONNECTED UNTIL THE ELECTRICAL UTILITY VOLTAGE HAS BEEN RESTORED.

E. EQUIPMENT SHALL BE IDENTIFIED FOR USE IN SOLAR PHOTOVOLTAIC SYSTEMS.

F. EQUIPMENT, INCLUDING WIRING, FUSES, CIRCUIT BREAKERS, ETC., USED IN ANY DC PORTION OF THE PHOTOVOLTAIC POWER SYSTEM SHALL BE LISTED FOR USE IN 1000 VOLT DC CIRCUITS.

PART 2 - PRODUCTS

2.1 PHOTOVOLTAIC PANELS AND ARRAYS

A. OPERATING ENVIRONMENT CONDITIONS:

1. OPERATING TEMPERATURE: -40 TO 90°C
2. WET LOCATION LISTED

B. CELL MATERIAL: SILICON-BASED SOLAR CELL CONSTRUCTION WITH UV STABILIZED POLYMER. PROVIDE WITH BYPASS DIODE TECHNOLOGY FOR PARTIAL SHADING OPERATION.

C. PANEL CONSTRUCTION: ANODIZED ALUMINUM FRAME WITH GROUND POINT AND TEMPERED GLASS COVER.

D. PANEL CONNECTIONS AND TERMINATIONS:

1. PROVIDE MANUFACTURER'S WIRING AND QUICK-CONNECT TERMINATIONS FOR SERIES CREATION OF MODULE-STRINGS INSTALLATION OF PANELS.
2. PROVIDE MANUFACTURER WIRING TO COMBINER BOXES FOR PARALLEL GROUPING OF MODULE-STRINGS.
3. ALL EXTERIOR WIRE AND TERMINATIONS SHALL BE LISTED SUNLIGHT RESISTANT.

2.2 COMBINER/DISCONNECT

A. COMBINATION OF COMBINER BOX AND SOLAR ARRAY DISCONNECT IN A SINGLE ENCLOSURE.

B. LOAD BREAK SWITCH RATED 1000 VDC MAXIMUM WITH LOCKOUT PROVISIONS.

C. FUSE HOLDERS RATED 30 AMP MAXIMUM. TERMINAL BLOCKS FOR EACH PV STRING.

D. PROVIDE FUSED SURGE PROTECTIVE DEVICE (SPD) WITH VISUAL STATUS INDICATOR AND REMOTE. BUSSMAN BSP SERIES OR APPROVED EQUAL.

E. ENCLOSURE: NEMA 4X.

2.3 PHOTOVOLTAIC GRID TIE STRING INVERTERS

A. INVERTER MANUFACTURERS:

1. SMA AMERICA MODEL SUNNY TRIPOWER X 20-US (BASIS OF DESIGN)
2. OR PRE-APPROVED EQUALS

B. OPERATING ENVIRONMENT CONDITION:

1. MAXIMUM AMBIENT TEMPERATURE: 113°F
2. WET LOCATION LISTED

C. INVERTER TECHNOLOGY: TRANSFORMERLESS FULL DC/AC RECTIFICATION, REAL SINE-WAVE OUTPUT WITH HIGH FREQUENCY PULSE WIDTH MODULATION PWM.

D. INTERNAL PROTECTION: INVERTER SHALL MEASURE UTILITY VOLTAGE, CURRENT, AND IMPEDANCE. LOSS OF UTILITY POWER SHALL CAUSE INVERTER TO SHUT DOWN AND DISCONNECT ITS OUTPUT TO THE AC BUS AND INPUT FROM THE DC BUS. INVERTER SHALL AUTOMATICALLY RECONNECT TO AC OUTPUT BUS AND DC INPUT BUS UPON RETURN OF UTILITY SOURCE.

E. THE INVERTER SHALL BE CONSTRUCTED TO NOT ALLOW BACKFEEDING FROM THE ELECTRICAL UTILITY TO THE PHOTOVOLTAIC PANELS OR DC INPUT BUS.

F. THE INVERTER SHALL HAVE INTEGRAL AC AND DC DISCONNECTS.

PART 3 - EXECUTION

3.1 INSTALLATION

A. PHOTOVOLTAIC CABLING SHALL BE INSTALLED IN RACEWAYS SEPARATE FROM OTHER BUILDING SYSTEM CABLING. PHOTOVOLTAIC CABLING SHALL BE INSTALLED IN CONDUIT WHEN LOCATED INTERIOR TO THE BUILDING.

B. THE PHOTOVOLTAIC PANELS AND ARRAYS SHALL BE CONFIGURED IN AN OPEN CIRCUIT, SHORT CIRCUIT, OR PROVIDED WITH AN OPAQUE COVERING TO DISABLE THE ARRAY FROM PRODUCING ELECTRICAL POWER DURING INSTALLATION. REFER TO THE MANUFACTURER'S INFORMATION FOR ADDITIONAL DISABLING REQUIREMENTS DURING INSTALLATION.

C. INSTALL FUSES IN ALL FUSE HOLDERS AND DISCONNECTS. PROVIDE A LABEL ON THE INSIDE OF EACH DISCONNECT IDENTIFYING THE SIZE, TYPE, AND MODEL OF EACH FUSE INSTALLED.

D. PROVIDE PROVISIONS TO SEAL ALL EXTERIOR PENETRATIONS. ALL PHOTOVOLTAIC SYSTEM ROOF PENETRATIONS SHALL BE SEALED BY THE ROOFING CONTRACTOR AT THE EXPENSE OF THE PHOTOVOLTAIC SYSTEM CONTRACTOR.

E. DC ARC-FAULT CIRCUIT PROTECTION: PROVIDE PVAFCI ARC-FAULT CIRCUIT INTERRUPTION PROTECTION FOR DC BRANCH CIRCUITS.

F. DC SHOCK HAZARD PROTECTION: PROVIDE PVHCS HAZARD CONTROL SYSTEM TO LIMIT ELECTRIC SHOCK POTENTIAL TO 80 VOLTS OR LESS POST RAPID SHUTDOWN INITIATION OR PER CODE.

G. WIRE AND CABLE SCHEDULE:

1. THESE REQUIREMENTS ARE IN ADDITION TO THE REQUIREMENTS OF SECTION 260513.
2. DC DISTRIBUTION SYSTEM:
   a. EXTERIOR: PHOTOVOLTAIC PANEL MANUFACTURER-SUPPLIED CABLING WITH QUICK CONNECTS.
   b. CONDUCTORS SHALL BE COLOR CODED AS FOLLOWS:
      1) PV-: BLACK
      2) PV+: RED
      3) GROUND BOND: GREEN
3. AC DISTRIBUTION SYSTEM:
   a. REFER TO SECTION 260513.
4. USE NO WIRE SMALLER THAN 10 AWG FOR DC WIRING OF THE PHOTOVOLTAIC SYSTEM.
5. USE 8 AWG FOR DC WIRING OF PHOTOVOLTAIC SYSTEMS WITH DISTANCES BETWEEN THE PHOTOVOLTAIC PANEL AND PHOTOVOLTAIC INVERTER GREATER THAN 100 FEET.

H. PROVIDE PROVISIONS FOR PROGRAMMING AND INITIALIZING THE SYSTEM METERING AND REPORTING SOFTWARE PER THE OWNER'S REQUIREMENTS. THE CONTRACTOR SHALL ORGANIZE A MEETING WITH THE OWNER TO FINALIZE THE PROGRAMMING AND USER INTERFACES OF THE PROGRAM SOFTWARE.

I. INSTALL EQUIPMENT PER THE MANUFACTURER'S RECOMMENDATIONS.

3.2 LABELING

A. REFER TO SECTION 260553 FOR PRODUCT REQUIREMENTS.

B. LABEL ALL PHOTOVOLTAIC SYSTEM EQUIPMENT AS REQUIRED BY CODE.

C. LABEL GROUND FAULT INDICATORS:

1. "IN THE EVENT OF A GROUND FAULT INDICATION - THE NORMALLY GROUNDED CONDUCTORS MAY BE ENERGIZED AND UNDERGROUNDED"

D. LABEL ALL AC-ALTERNATING CURRENT AND DC-DIRECT CURRENT DISCONNECTS OF THE PHOTOVOLTAIC POWER SYSTEM.

1. "---PHOTOVOLTAIC SYSTEM DISCONNECT---WARNING. ELECTRIC SHOCK HAZARD. DO NOT TOUCH TERMINALS. TERMINALS ON BOTH THE LINE AND LOAD SIDES MAY BE ENERGIZED IN THE OPEN POSITION"

E. THE AC DISCONNECTING MEANS FOR EACH PHOTOVOLTAIC INVERTER SHALL BE LABELED WITH THE FOLLOWING:

1. OPERATING CURRENT:
2. OPERATING VOLTAGE:
3. MAXIMUM SYSTEM VOLTAGE:

F. LABEL DC RACEWAYS, CABLING, JUNCTION BOXES, AND CONDUIT BODIES WITH ADHESIVE MARKINGS AND LABELS SUITABLE FOR THE ENVIRONMENT:

1. COLOR: WHITE CAPITAL LETTERS ON RED BACKGROUND.
2. LABEL TEXT: PHOTOVOLTAIC POWER SOURCE.
3. LABEL INTERVALS: MAXIMUM 10 INTERVALS OR AS REQUIRED BY CODE TO IDENTIFY ALL CONDUITS RUN EXPOSED OR LOCATED ABOVE ACCESSIBLE CEILINGS. CONDUITS LOCATED ABOVE NON-ACCESSIBLE CEILING OR IN FLOORS AND WALLS SHALL BE LABELED WITHIN 3 FEET OF BECOMING ACCESSIBLE, OR SEPARATED BY ENCLOSURES, WALLS, PARTITIONS, CEILINGS, AND FLOORS. LABELS FOR MULTIPLE CONDUITS SHALL BE ALIGNED.

G. LABEL DC SYSTEM DISCONNECT AND POWER CONVERSION EQUIPMENT WITH THE FOLLOWING:

1. EQUIPMENT TYPE AND CONTRACT DOCUMENTS DESIGNATION OF EQUIPMENT.
2. NAME OF UPSTREAM EQUIPMENT AND LOCATION OF THE UPSTREAM EQUIPMENT IF IT IS NOT LOCATED WITHIN SIGHT.
3. NOMINAL EQUIPMENT VOLTAGE AND RATING.
4. MAX DC VOLTAGE.
5. AVAILABLE FAULT CURRENT (FROM BATTERIES IF APPLICABLE).
6. DATE OF FAULT CURRENT STUDY; REFER TO ONE-LINE DIAGRAM.

H. LABEL EACH ELECTRICAL SERVICE LOCATION WITH RAPID SHUTDOWN FEATURE:

1. LABEL TEXT: "SOLAR PV SYSTEM WITH RAPID SHUTDOWN. TURN RAPID SHUTDOWN SWITCH TO THE "OFF" POSITION TO SHUT DOWN PV SYSTEM AND REDUCE SHOCK HAZARD IN ARRAY."

I. SHORT CIRCUIT CURRENT: THE INTERACTIVE SYSTEM POINT OF INTERCONNECTION SHALL BE LABELED AT THE DISCONNECTING MEANS WITH THE FOLLOWING:

1. MAXIMUM AC OUTPUT OPERATING CURRENT:
2. OPERATING AC VOLTAGE:

J. THE BUILDING SERVICE ENTRANCE DISCONNECT SHALL BE CLEARLY LABELED TO IDENTIFY THERE IS A PHOTOVOLTAIC SYSTEM INTERCONNECTION. THE LOCATION OF THE INTERACTIVE SYSTEM DISCONNECT SHALL BE IDENTIFIED WITH A PLAQUE READING: "WARNING - PHOTOVOLTAIC SYSTEM DISCONNECT LOCATED AT PARKING CANOPY."

K. CONDUCTOR IDENTIFICATION:

1. PV SYSTEM DC CIRCUIT CONDUCTORS SHALL BE IDENTIFIED AT ALL TERMINATION CONNECTIONS.
2. IDENTIFICATION SHALL INCLUDE COLOR CODED SHRINK TUBE TAGGING, CONDUCTOR COLORED INSULATION, OR MARKING TAPE. INCLUDE +, POSITIVE, OR POS IDENTIFICATION STYLE LABELING IN ADDITION TO COLOR IDENTIFICATION.

3.3 FIELD QUALITY CONTROL

A. PERFORM FIELD INSPECTION AND TESTING UNDER PROVISIONS OF SECTION 260500.

B. CHECK FOR DAMAGE AND TIGHT CONNECTIONS PRIOR TO ALLOWING THE PHOTOVOLTAIC PANELS TO BEGIN POWER GENERATION.

C. CHECK FOR DAMAGE AND PROPER OPERATION OF THE PHOTOVOLTAIC INVERTERS.

D. VERIFY OPERATION OF THE METERING AND REPORTING SYSTEM COMPONENTS. ADJUST AND UPDATE THE GRAPHICAL USER INTERFACE FOR PROJECT SPECIFIC CONDITIONS.

3.4 SYSTEM COMMISSIONING

A. PROVIDE SYSTEM COMMISSIONING REPORT UNDER PROVISIONS OF SECTION 260500.

B. NOTIFY ARCHITECT/ENGINEER SEVEN DAYS PRIOR TO BEGINNING FINAL WITNESS TESTING OF THE PHOTOVOLTAIC SYSTEM.

1. THE ELECTRICAL CONTRACTOR SHALL FULLY TEST THE COMPLETE PHOTOVOLTAIC SYSTEM PRIOR TO NOTIFYING THE ARCHITECT/ENGINEER FOR FINAL WITNESS TESTING.

C. TEST, MEASURE, AND RECORD THE FOLLOWING SYSTEM VALUES:

1. DATE:
2. TIME OF TEST:
3. TESTERS:
4. SUN OVERCAST CONDITIONS (FULL SUN) (SCATTERED CLOUDS) (FULL CLOUD COVERAGE).
5. INVERTER:
   a. DC INPUT CURRENT:
   b. DC INPUT VOLTAGE:
   c. AC OUTPUT CURRENT:
   d. AC OUTPUT VOLTAGE:
   e. OUTPUT POWER:

D. PERFORMANCE TEST OF INTERACTIVE INVERTER SYSTEM:

1. VERIFY PROPER OPERATION OF THE PHOTOVOLTAIC SYSTEM. VERIFY THE PHOTOVOLTAIC SYSTEM IS PRODUCING POWER AND DELIVERING IT TO THE BUILDING ELECTRICAL DISTRIBUTION SYSTEM.
2. SIMULATE POWER OUTAGE OF ELECTRICAL UTILITY BY SWITCHING THE MAIN ELECTRICAL SERVICE DISCONNECT FROM "CLOSED" TO "OPEN".
3. VERIFY THAT EACH INDIVIDUAL PHOTOVOLTAIC INVERTER HAS STOPPED PRODUCING ELECTRICAL ENERGY AND HAS DISCONNECTED ITSELF FROM THE PHOTOVOLTAIC PANELS AND BUILDING ELECTRICAL DISTRIBUTION SYSTEM.
4. SIMULATE RETURN OF UTILITY ELECTRICAL POWER BY SWITCHING THE MAIN ELECTRICAL SERVICE DISCONNECT FROM "OPEN" TO "CLOSED".
5. VERIFY EACH PHOTOVOLTAIC INVERTER HAS RECONNECTED TO THE PHOTOVOLTAIC PANELS AND BUILDING ELECTRICAL DISTRIBUTION SYSTEM. VERIFY POWER DELIVERY FROM THE PHOTOVOLTAIC INVERTERS TO THE BUILDING ELECTRICAL DISTRIBUTION SYSTEM.
6. DOCUMENT ANY TEST FAILURE, INCLUDING REASON FOR FAILURE AND CORRECTIVE ACTIONS. RETEST THE PHOTOVOLTAIC SYSTEM TO COMPLETE SATISFACTORY OPERATION.

LPA

ARCHITECTURE ENGINEERING INTERIOR DESIGN
LANDSCAPE ARCHITECTURE PLANNING

949-261-1001 Office

LPADesignStudios.com

5301 California Avenue, Suite 100
Irvine, California 92617

REGISTERED PROFESSIONAL ENGINEER
NESTOR C. IGNACIO
Lic. E16934
Exp. 6-30-2027
ELECTRICAL
STATE OF CALIFORNIA

IMEG
www.imegcorp.com
300 NORTH LAKE AVENUE
12TH FLOOR
PASADENA, CA 91101
P: 626.463.2800 F: 626.463.2801
PROJECT #25007252.00

This document and all other project documents, ideas, aesthetics and designs incorporated therein are instruments of service. All project documents are copyright protected, are the property of LPA, Inc. (LPA) and cannot be lawfully used in whole or in part for any project or purpose except as set forth in the contractual agreement between LPA and its Client. The unauthorized disclosure and/or use of the project documents (including the creation of derivative works), may give rise to liability for copyright infringement, unlawful disclosure, use or misappropriation of property rights held by LPA. The unauthorized use of the project documents will give rise to the recovery of monetary losses and damages including attorney fees and costs for which the unauthorized user will be held liable.
Project documents describe the design intent of the work and are not a representation of as-built or existing conditions. LPA is not responsible for any discrepancies between the project documents and the existing conditions.

© LPA, Inc.

ALTADENA ELEMENTARY SCHOOL

743 E Calaveras St,
Altadena, CA 91001

ALTADENA ELEMENTARY SCHOOL

Revision	Date
Addendum 1	04/17/2026

Submittal	Date
100% SCHEMATIC DESIGN	12/05/2025
DSA SUBMITTAL	02/02/2026
DSA SUBMITTAL V2	03/13/2026

33366

Checker

E405

ELECTRICAL SPECIFICATIONS

ELECTRICAL ABBREVIATIONS LEGEND

A	AMPERE
A/C	AIR-CONDITIONING
AC	ALTERNATING CURRENT; ARMORED CABLE
ADJ	ADJUSTABLE
AF	AMPERE FUSE; AMPERE FRAME
AFF	ABOVE FINISHED FLOOR
AFG	ABOVE FINISHED GRADE
AFCI	ARC FAULT CIRCUIT INTERRUPTER
AHU	AIR HANDLING UNIT
AIC	AMPERE INTERRUPTING CAPACITY
AL	ALUMINUM
ALT	ALTERNATE
ALUM	ALUMINUM
AMP	AMPERE
ANSI	AMERICAN NATIONAL STANDARDS INSTITUTE
AP	ACCESS PANEL
APPROX	APPROXIMATE
ARCH	ARCHITECT
ASYM	ASYMMETRICAL
AT	AMPERE TRIP
ATS	AUTOMATIC TRANSFER SWITCH
AUX	AUXILIARY
AVG	AVERAGE
AWG	AMERICAN WIRE GAUGE
BATT	BATTERY
BD	BOARD
BFG	BELOW FINISHED GRADE
BLDG	BUILDING
BPS	BOLTED PRESSURE SWITCH
BR	BRANCH
BRKR	BREAKER
C	CONDUIT; CENTIGRADE
C/C	CENTER TO CENTER
CAB	CABINET
CAP	CAPACITY
CB	CIRCUIT BREAKER
CCTV	CLOSED CIRCUIT TELEVISION
CD	CANDELA; CLOTHES DRYER
CF	CUBIC FEET; COMPACT FLUORESCENT
CHW	CHILLED WATER
CHWP	CHILLED WATER PUMP
CIP	CAST IN PLACE
CIR	CIRCUIT
CKT	CIRCUIT
CLF	CURRENT LIMITING FUSE
CLG	COOLING; CEILING
CM	CONSTRUCTION MANAGER
CMU	CONCRETE MASONRY UNIT
CO	CENTRAL OFFICE
COGB	CENTRAL OFFICE GROUND BAR
COL	COLUMN
COMB	COMBINATION
COMPR	COMPRESSOR
CONC	CONCRETE
COND	CONDENSATE; CONDUCTOR
CONT	CONTINUOUS; CONTINUED; CONTRACTOR
CP	CONTROL PANEL
CPT	CONTROL POWER TRANSFORMER
CSAC	CENTRAL STATION AIR CONDITIONER
CT	CURRENT TRANSFORMER
CU	COPPER; CUBIC
CU FT	CUBIC FOOT
CUH	CABINET UNIT HEATER
CW	COOL WHITE; COLD WATER; CLOTHES WASHER
CY	CUBIC YARD
CYL	CYLINDER
D	DEEP; DEPTH; DISCHARGE
DB	DECIBEL; DIRECT BURIED
DC	DIRECT CURRENT
DDC	DIRECT DIGITAL CONTROL
DF	DRINKING FOUNTAIN
DHW	DOMESTIC HOT WATER
DIA	DIAMETER
DIAG	DIAGONAL
DIAM	DIAMETER
DIFF	DIFFUSER
DISC	DISCONNECT
DIST	DISTRIBUTION
DN	DOWN
DP	DUSTPROOF; DOUBLE POLE
DPDT	DOUBLE POLE, DOUBLE THROW
DPST	DOUBLE POLE, SINGLE THROW
DT	DUSTTIGHT; DOUBLE THROW
DW	DISHWASHER
DWG	DRAWING
DX	DIRECT EXPANSION
E	EQUIPMENT ONLY; EAST; ELECTRICAL; EXISTING
EA	EACH
EBBR	ELECTRIC BASEBOARD RADIATION
EB	ELECTRONIC BALLAST
EC	ELECTRICAL CONTRACTOR
EF	EXHAUST FAN
EGC	EQUIPMENT GROUNDING CONDUCTOR
EIFS	EXTERIOR INSULATION FINISH SYSTEM
ELECT	ELECTRICIAN; ELECTRICAL; ELECTRONIC
ELEV	ELEVATOR; ELEVATION
EM	EMERGENCY
EMERG	EMERGENCY
EMS	ENERGY MANAGEMENT SYSTEM
EMT	ELECTRICAL METALLIC TUBING
ENCL	ENCLOSURE
ENG	ENGINE; ENGINEERED
ENGR	ENGINEER
EP	EXPLOSIONPROOF; ELECTRIC-PNEUMATIC
EQUIP	EQUIPMENT
ER	EXISTING TO REMAIN
ES	ENERGY SAVER
EST	ESTIMATED
EWC	ELECTRIC WATER COOLER
EWH	ELECTRIC WATER HEATER
EX	EXISTING
EXCAV	EXCAVATION
EXIST	EXISTING
EXH	EXHAUST
EXP	EXPOSED
EXR	EXISTING RELOCATED
EXT	EXTERIOR
EXTG	EXISTING
F	FUSED; FAHRENHEIT
FA	FIRE ALARM
FAAP	FIRE ALARM ANNUNCIATOR PANEL
FACP	FIRE ALARM CONTROL PANEL
FC	FOOT-CANDLE
FCU	FAN COIL UNIT
FD	FUSED DISCONNECT
FDR	FEEDER
FEP	FLUORINATED ETHYLENE PROPYLENE
FFEC	FOODSERVICE FACILITIES EQUIPMENT CONTRACTOR
FIG	FIGURE
FIN	FINISHED
FIXT	FIXTURE
FLA	FULL LOAD AMPS
FLR	FLOOR
FLUOR	FLUORESCENT
FM	FREQUENCY MODULATION; FACTORY MUTUAL
FPM	FEET PER MINUTE
FR	FIRE RATING
FT	FOOT; FEET
FTG	FITTING; FOOTING
FURN	FURNISHED
FVNR	FULL VOLTAGE NON-REVERSING
G	GROUND
GA	GAUGE
GAL	GALLON
GALV	GALVANIZED
GC	GENERAL CONTRACTOR
GEN	GENERAL; GENERATOR
GFCI	GROUND FAULT CIRCUIT INTERRUPTER
GFI	GROUND FAULT INTERRUPTER
GFP	GROUND FAULT PROTECTOR
GND	GROUND
GP	GENERAL PURPOSE
GPM	GALLONS PER MINUTE
GRC	GALVANIZED RIGID CONDUIT
GRD	GROUND; GROUNDED
GRS	GALVANIZED RIGID STEEL
H	HIGH
HACR	HEATING, AIR CONDITIONING & REFRIGERATION
HD	HEAVY DUTY
HG	MERCURY
HH	HAND HOLE
HIC	HIGH INTERRUPTING CAPACITY
HO	HIGH OUTPUT
HOA	HAND-OFF-AUTOMATIC
HORIZ	HORIZONTAL
HP	HORSEPOWER; HIGH PRESSURE
HPF	HIGH POWER FACTOR
HPS	HIGH PRESSURE SODIUM
HR	HOUR
HRS/DAY	HOURS PER DAY
HSC	HIGH SHORT CIRCUIT
HT	HEIGHT
HTG	HEATING
HTRS	HEATERS
HV	HIGHT VOLTAGE
HVAC	HEATING, VENTILATION & AIR-CONDITIONING
HW	HOT WATER; HEAVY WALL
HWP	HEATING WATER PUMP
HYD	HYDRAULIC
HZ	HERTZ
IC	INTERRUPTING CAPACITY
ID	INSIDE DIAMETER
IDF	INTERMEDIATE DISTRIBUTION FRAME
IEEE	INSTITUTE OF ELECTRICAL & ELECTRONICS ENGINEERS
IF	INSIDE FROSTED
IG	ISOLATED GROUND
IMC	INTERMEDIATE METAL CONDUIT
IMP	IMPEDANCE
IN	INCH
INCAND	INCANDESCENT
INCL	INCLUDED; INCLUDING
INST	INSTALLATION
INSUL	INSULATION; INSULATED
INT	INTERIOR; INTERNAL
INV EL	INVERT ELEVATION
IS	INSTANT START
J	JOULE; JUNCTION
JB	JUNCTION BOX
J-BOX	JUNCTION BOX
K	THOUSAND
KCMIL	THOUSAND CIRCULAR MILS
KEC	KITCHEN EQUIPMENT CONTRACTOR
KHZ	KILOHERTZ
KK	KIRK KEY
KP	KEYPAD
KV	KILOVOLT
KVA	KILOVOLT AMPERE
KVAR	KILOVOLT AMPERE REACTIVE
KW	KILOWATT
KWH	KILOWATT-HOUR
L	LENGTH; LONG
LAB	LABOR; LABORATORY
LB	POUND; ELL CONDUIT BODY
LEC	LABORATORY EQUIPMENT COMPANY (CONTRACTOR)
LED	LIGHT EMITTING DIODE
LF	LINEAR FOOT
LG	LONG; LENGTH; LARGE
LLD	LAMP LUMEN DEPRECIATION
LM	LUMEN
LO	LOCKOUT
LP	LIGHTING PANEL
LPF	LOW POWER FACTOR
LRA	LOCKED ROTOR AMPS
LT	LIGHT; LIQUID-TIGHT
LTG	LIGHTING
LTR	LETTER
LV	LOW VOLTAGE
M	THOUSAND; MATERIAL; MECHANICAL; METER
MA	MILLIAMPERE
MACH	MACHINE
MAG STR	MAGNETIC STARTER
MAINT	MAINTENANCE
MAN	MANUAL
MAT	MATERIAL
MATV	MASTER ANTENNA TELEVISION
MAX	MAXIMUM
MC	METAL CLAD CABLE; MECHANICAL CONTRACTOR; MOTOR CONTROLLER
MCA	MINIMUM CIRCUIT AMPS
MCB	MAIN CIRCUIT BREAKER
MCC	MOTOR CONTROL CENTER
MCCB	MOLDED CASE CIRCUIT BREAKER
MCM	THOUSAND CIRCULAR MILS
MCP	MOTOR CIRCUIT PROTECTOR
MCS	MOTOR CIRCUIT SWITCH
MDF	MAIN DISTRIBUTION FRAME
MDP	MAIN DISTRIBUTION PANELBOARD
MECH	MECHANICAL
MED	MEDIUM
MFG	MANUFACTURING
MFR	MANUFACTURER
MH	MANHOLE; METAL HALIDE; MAN-HOUR
MHZ	MEGAHERTZ
MI	MALLEABLE IRON; MINERAL INSULATED
MIC	MICROPHONE
MIN	MINIMUM; MINUTE
MISC	MISCELLANEOUS
MLO	MAIN LUG ONLY
MO	MONTH
MOBIL	MOBILIZATION
MOCP	MAXIMUM OVERCURRENT PROTECTION
MOG	MOGUL
MTD	MOUNTED
MTG	MOUNTING
MTS	MANUAL TRANSFER SWITCH
MULT	MULTI; MULTIPLY
MV	MERCURY VAPOR, MEGAVOLT; MEDIUM VOLTAGE
MVA	MEGAVOLT AMPERES
MVAR	MEGAVOLT AMPERES REACTIVE
MW	MEGAWATT
N	NORTH; NEW; NEUTRAL
N/A	NOT AVAILABLE; NOT APPLICABLE
NA	NON-AUTOMATIC
NAT	NATURAL
NC	NORMALLY CLOSED
ND	NORMAL DUTY
NEC	NATIONAL ELECTRICAL CODE
NEMA	NATIONAL ELECTRICAL MANUFACTURERS ASSOCIATION
NF	NON-FUSED
NFD	NON-FUSED DISCONNECT
NIC	NOT IN CONTRACT
NL	NIGHT LIGHT
NM	NON-METALLIC SHEATHED CABLE
NO	NUMBER; NORMALLY OPEN
NTS	NOT TO SCALE
O&P	OVERHEAD AND PROFIT
OC	ON CENTER; OVERCURRENT
OD	OUTSIDE DIAMETER
ODS	OVERHEAD DISTRIBUTION SYSTEM
OH	OVERHEAD
OHD	OVERHEAD DOOR
OL	OVERLOAD
OPGP	OFFICE PRINCIPAL GROUND POINT
OS&Y	OUTSIDE SCREW AND YOKE
OZ	OUNCE
P	POLE; PULL
PA	PUBLIC ADDRESS
PB	PUSHBUTTON; PULL BOX
PC	POWER CONNECTOR; PHOTOCELL
PD	PROTECTIVE DEVICE
PE	PROFESSIONAL ENGINEER
PF	POWER FACTOR
PFCC	POWER FACTOR CORRECTION CAPACITOR
PH	PHASE
PIV	POST INDICATOR VALVE
PKG	PACKAGE
PL	PILOT LIGHT
PLBG	PLUMBING
PNL	PANELBOARD
PR	PAIR
PRI	PRIMARY
PSF	POUNDS PER SQUARE FOOT
PSI	POUNDS PER SQUARE INCH
PSIG	POUNDS PER SQUARE INCH GAUGE
PT	POTENTIAL TRANSFORMER
PU	PER UNIT
PVC	POLYVINYL CHLORIDE
PWR	POWER
QUAN	QUANTITY
R	RESISTANCE; RELOCATED; RECESSED
RCS	RELAY CONTROL STATION
RECEPT	RECEPTACLE
RECIRC	RECIRCULATING
REF	REFERENCE; REFRIGERATED
REQ'D	REQUIRED
RET	RETURN
RF	RETURN FAN
RGS	RIGID GALVANIZED STEEL
RLA	RUNNING LOAD AMPS
RM	ROOM
RMS	ROOT MEAN SQUARE
RNC	RIGID NON-METALLIC CONDUIT
RP	RAINPROOF
RPM	REVOLUTIONS PER MINUTE
RR	RESTROOM
R&R	REMOVE & REPLACE
RS	RAPID START
RSC	RIGID STEEL CONDUIT
RT	RAINTIGHT
S	SOUTH
SCCR	SHORT-CIRCUIT CURRENT-RATING
SCHED	SCHEDULE
SCR	SHORT CIRCUIT RATING
SD	SERVICE DROP
SE	SERVICE ENTRANCE; SERVICE EQUIPMENT
SEC	SECONDARY
SF	SUPPLY FAN; SQUARE FOOT
SL	SLIM LINE; SERVICE LATERAL
SN	SOLID NEUTRAL
SP	SINGLE POLE
SPD	SURGE PROTECTIVE DEVICE
SPDT	SINGLE POLE, DOUBLE THROW
SPKR	SPEAKER
SPST	SINGLE POLE, SINGLE THROW
SQ	SQUARE
SQ FT	SQUARE FOOT
SQ IN	SQUARE INCH
SR	SERVICE RACEWAY; SURFACE RACEWAY
SS	STAINLESS STEEL; SAFETY SWITCH
S/S	START/STOP
ST	STEEL: SHUNT TRIP; SINGLE THROW
STD	STANDARD
STR	STARTER
STRUCT	STRUCTURAL
SUBS	SUBCONTRACTORS
SURF	SURFACE
SV	SOLENOID VALVE
SW	SWITCH
SWD	SWITCHING DUTY
SWBRD	SWITCHBOARD
SY	SQUARE YARD
SYM	SYMMETRICAL
SYN	SYNTHETIC
SYS	SYSTEM
T	TEMPERATURE; TRANSFORMER
TB	TERMINAL BLOCK
TC	TIME CLOCK
TCC	TEMPERATURE CONTROL CONTRACTOR
TD	TIME DELAY
TELE	TELEPHONE
TFE	TETRAFLUOROETHYLENE
TFF	TOP OF FINISHED FLOOR
TFMR	TRANSFORMER
TH	THICK
THD	TOTAL HARMONIC DISTORTION: THREAD
TR	TAMPER RESISTANT
TS	TRIGGER START
TTB	TELEPHONE TERMINAL BOARD
TV	TELEVISION
TVSS	TRANSIENT VOLTAGE SURGE SUPPRESSOR
TYP	TYPICAL
UC	UNDER (CABINET OR COUNTER)
UF	UNDERGROUND FEEDER
UG	UNDERGROUND
UH	UNIT HEATER
UHF	ULTRA HIGH FREQUENCY
UL	UNDERWRITERS LABORATORY
UNFIN	UNFINISHED
U0I	UNLESS OTHERWISE INDICATED
UTIL	UTILITY
UTP	UNSHIELDED TWISTED PAIR
UVR	UNDERVOLTAGE RELAY (RELEASE)
V	VOLT; VENTILATION
VA	VOLT AMPERES
VAR	VOLT-AMPERES REACTIVE
VAV	VARIABLE AIR VOLUME
VDT	VIDEO DISPLAY TERMINAL
VERT	VERTICAL
VFD	VARIABLE FREQUENCY DRIVE
VHF	VERY HIGH FREQUENCY
VHO	VERY HIGH OUTPUT
VOL	VOLUME
VT	VAPORTIGHT
W	WIRE; WATT; WIDE; WEST; WASTE
W/	WITH
WG	WIRE GUARD
WM	"WIREMOLD" (SURFACE RACEWAY)
WO	WELDER OUTLET
WP	WEATHERPROOF
WT	WEIGHT: WATERTIGHT
WWF	WELDED WIRE FABRIC
WW	WELL WATER; WARM WHITE
XHD	EXTRA HEAVY DUTY
XFMR	TRANSFORMER
XFER	TRANSFER
Y	WYE
°	DEGREE
Δ	DELTA
Ø	PHASE; DIAMETER
#	POUND; NUMBER
%	PERCENT
@	AT
~	APPROXIMATELY
'	FEET
"	INCHES

LIGHTING OCCUPANCY SENSORS & CONTROLLERS

NOTE: ALL WALL SWITCHES CONTROLLING EMERGENCY CIRCUITS SHALL BE ENGRAVED WITH "EMERGENCY"

- IO ab — WALL MOUNTED INFRA-RED OCCUPANCY SENSOR. LETTERS "ab" INDICATES DUAL RELAY SENSOR. MOUNTING HEIGHT PER ADA MOUNTING DETAIL THIS SHEET - UON OR REQUIRED.
- DO ab — WALL MOUNTED DUAL TECHNOLOGY OCCUPANCY SENSOR. LETTERS "ab" INDICATES DUAL RELAY SENSOR. LETTER "D" INDICATES DIMMING CONTROL. MOUNTING HEIGHT PER ADA MOUNTING DETAIL THIS SHEET - UON OR REQUIRED.
- ab — WALL MOUNTED VACANCY SENSOR (MANUAL ON), MOUNTING HEIGHT PER ADA MOUNTING DETAIL THIS SHEET - UON OR REQUIRED. LETTERS "ab" INDICATES DUAL RELAY SENSOR. BOTH SWITCH LEGS TO BE CONFIGURED IN A "MANUAL ON" CONFIGURATION.
- UO ab — WALL MOUNTED ULTRASONIC OCCUPANCY SENSOR. LETTERS "ab" INDICATES DUAL RELAY SENSOR. MOUNTING HEIGHT PER ADA MOUNTING DETAIL THIS SHEET - UON OR REQUIRED.
- OS m — CEILING MOUNTED OCCUPANCY SENSOR. "m" INDICATES SENSOR WITH POWER PACK AND HVAC CONTROL RELAY. "s" INDICATES SATELLITE SENSOR.
- OS D — WALL MOUNTED OCCUPANCY SENSOR/CONTROLLER (AUTO ON), "D" INDICATES DIMMING CONTROL
- D x* — AUTOMATIC CONTINUOUS DIMMING DAYLIGHTING CONTROLLER USED TO DIM LIGHTS WHEN SUFFICIENT NATURAL LIGHT IS PRESENT. NUMBER IN PARENTHESIS INDICATES THE AVERAGE WORKPLANE "TARGET ILLUMINATION" SYMBOL VALUE. ADJACENT LOWER CASE LETTERS "x*" INDICATES SWITCH LEG(S) CONTROLLED.
- OP x* — CEILING MOUNTED COMBINATION OCCUPANCY SENSOR AND PHOTOCELL
- DD — DIGITAL DISPLAY WALL CONTROLLER
- # — MULTI-SCENE PUSHBUTTON WITH ON/OFF/RAISE/LOWER("#" INDICATES NUMBER OF SCENES)
- MZ abc — MULTI-ZONE PUSHBUTTON. ("abc" INDICATES ZONING REQUIRED)
- R — RELAY PACK FOR ON/OFF SWITCHING OF CONTROLLED RECEPTACLE AND HVAC ENABLE

NOTE: REFER TO POWER PLANS FOR LOCATION AND QUANTITY OF CONTROLLED RECEPTACLES (PLUGLOAD).

- —LV— — LOW VOLTAGE (LV) WIRING BETWEEN OCCUPANCY, DAYLIGHT SENSORS, AND/OR LV SWITCHES. QUANTITY AND SPECIFICATIONS OF WIRE PER MANUFACTURER REQUIREMENTS.

BRANCH CIRCUIT SYMBOLS

NOTE: ALL NON-FINISHED CONDUIT TO BE PAINTED TO MATCH THE ADJACENT SURFACE, WHETHER CEILING OR WALL

- A-1,3,5 — HOME RUN TO PANEL. LETTER DESIGNATES PANEL, NUMBERS INDICATE CIRCUITS. HASH MARKS INDICATE NUMBER OF CONDUCTORS IN CONDUIT RUN, #12 AWG MINIMUM UNLESS OTHERWISE NOTED.
- A-1&3&5 — HOME RUN TO PANEL. LETTER DESIGNATES PANEL, NUMBERS INDICATE CIRCUITS WITH SEPARATE NEUTRALS. "&" INDICATES SEPARATE NEUTRALS.
- A-1+3+5 — HOME RUN TO PANEL. LETTER DESIGNATES PANEL, NUMBERS INDICATE CIRCUITS. "+" INDICATES SEPARATE #10 NEUTRAL THROUGHOUT BRANCH CIRCUIT. HASH MARK " " INDICATES AN ISOLATED GROUND CONDUCTOR.
- BRANCH CIRCUIT CONDUIT CONCEALED ABOVE CEILING, IN WALL OR SURFACE MOUNTED. CONDUIT SHALL INCLUDE PHASE, NEUTRAL AND GROUND CONDUCTORS AS REQUIRED FOR CIRCUITS (UNLESS OTHERWISE NOTED). 1/2" CONDUIT MINIMUM, (2)#12 AWG CONDUCTORS MINIMUM
- UNDERGROUND CONDUIT OR BRANCH CIRCUIT ROUTED IN FLOOR SLAB OR CONCRETE. COORDINATE INSTALLATION WITH GENERAL CONTRACTOR AND SUPPORT AS REQUIRED. REFER TO PLANS FOR MINIMUM SIZE OF CONDUITS AND CONDUCTORS AND A CODE SIZED EQUIPMENT GROUND.
- CONDUIT STUB OUT, CAP, MARK AND RECORD ON AS-BUILT DRAWINGS
- CONDUIT CONTINUATION.
- FLEXIBLE CONNECTION AS REQUIRED. NUMBER OF CONDUCTORS AS REQUIRED. VERIFY CONNECTION REQUIREMENTS WITH MANUFACTURER PRIOR TO ROUGH-IN.
- DN — CONDUIT/ BRANCH CIRCUIT/FEEDER CONTINUATION DOWN WALL TO FLOOR BELOW
- UP — CONDUIT/ BRANCH CIRCUIT/FEEDER CONTINUATION UP WALL TO FLOOR ABOVE

SITE UTILITY SYMBOLS

- MH — MAN HOLE - POWER OR COMMUNICATION AS INDICATED ON PLANS
- HH — HAND HOLE - POWER OR COMMUNICATION AS INDICATED ON PLANS
- PB OR P — PULLBOX, SIZED PER N.E.C. OR AS NOTED.
- POWER POLE
- PC — POWER CONNECTION TO EQUIPMENT
- U-XFMR — UTILITY TRANSFORMER PROVIDED BY LOCAL UTILITY JURISDICTION.
- S — PAD MOUNTED SWITCH
- CC — CONNECTION CABINET (UTILITY METER MOUNT)
- PM — PRIMARY SITE METER ENCLOSURE
- ME — METER ENCLOSURE. EITHER ON BUILDING OR ON UTILITY EQUIPMENT
- CT — CT ENCLOSURE. EITHER ON BUILDING OR UTILITY EQUIPMENT
- EG — ENGINE GENERATOR
- TP — TELECOMMUNICATION PEDESTAL

EMERGENCY LIGHT SYMBOLS

- ILLUMINATED EXIT SIGN WITH NUMBER OF FACES AND DIRECTION OF EGRESS ARROWS AS INDICATED.
- LOW LEVEL EXIT SIGN AS SPECIFIED ON LIGHTING FIXTURE SCHEDULE.
- EGRESS EMERGENCY BATTERY PACK LIGHT FIXTURE (BUGEYE).
- A1-1/EM — "EM" AND/OR SHADED CONNECTION POINT INDICATES FIXTURE WITH EMERGENCY BATTERY PACK (MINIMUM 1100 LUMEN OUTPUT) OR FIXTURE ON EMERGENCY INVERTER.

FLOOR BOX / SPECIALTY SYMBOLS

RECESSED COMBINATION FLOOR BOX WITH POWER AND DATA CONNECTIONS TO FURNITURE SYSTEMS/VARIOUS FLOOR APPLICATIONS. ALL CONNECTION REQUIREMENTS SHALL BE VERIFIED WITH THE MANUFACTURER PRIOR TO INSTALLATIONS. REFER TO SHEET E0.01 FOR ADDITIONAL SPECIFICATION INFORMATION AND APPLICATIONS.

TECHNOLOGY SYMBOLS

- SECURITY CAMERA. ACTI I910 (OR EQUAL.) WITH ASSOCIATED COMPONENTS. INSTALL (1) CATEGORY 6 CABLE TO NEAREST IDF. USE OSP TYPE OF CABLE WHEN RUN UNDERGROUND.
- SECURITY CAMERA. ACTI Z92 (OR EQUAL.) WITH ASSOCIATED COMPONENTS. INSTALL (1) CATEGORY 6 CABLE TO NEAREST IDF. USE OSP TYPE OF CABLE WHEN RUN UNDERGROUND.
- NVR — NETWORK VIDEO RECORDER. ACTI GNR-410 (OR EQUAL.) RACKMOUNT NVR WITH ASSOCIATED COMPONENTS.
- CR — ACCESS CONTROL DOOR SET. PROXPRO READER # 5355 (OR EQUAL.) AND DOOR CONTACT WITH ASSOCIATED COMPONENTS AND CABLING.
- DAC — DOOR ACCESS CONTROLLER. ACCELATERM CICP2800 WITH ASSOCIATED COMPONENTS AS REQUIRED.
- INT — AUDIO/VIDEO INTERCOM SET, ACTI Q950 WITH ASSOCIATED COMPONENTS AND CABLING.

POWER FIXTURE SYMBOL LEGEND

THE LEGEND INDICATED BELOW REPRESENTS DIFFERENT TYPES OF RECEPTACLE /ELECTRICAL DEVICE SYMBOLS UTILIZED FOR THIS PROJECT. NOT ALL BUT FEW SYMBOLS WILL BE USED FOR THE INDICATED SCOPE OF THE PROJECT. RECEPTACLES SHALL MEET CALIFORNIA BUILDING CODE CHAPTER 11B IN ORDER TO COMPLY WITH THE REQUIREMENTS FOR ACCESSIBLE REACH REFER TO DETAILS SHEETS FOR ACCESSIBILITY MOUNTING HEIGHTS.

- DUPLEX RECEPTACLE
- DUPLEX CONTROLLED RECEPTACLE
- ISOLATED DUPLEX RECEPTACLE
- DEDICATED 20A, DUPLEX RECEPTACLE
- GFCI DUPLEX RECEPTACLE
- DUPLEX RECEPTACLE WITH USB
- EMERGENCY DUPLEX RECEPTACLE. TICK MARKS SHOWN ON ANY DEVICE REPRESENTS RECEPTACLE CONNECTED TO THE EMERGENCY CIRCUIT (RED DEVICE)
- SIMPLEX RECEPTACLE
- SPECIAL RECEPTACLE
- DUPLEX RECEPTACLE FLUSH IN CEILING - MOUNT FLUSH IN FLOOR WHEN INDICATED IN A FLOOR BOX SYMBOL.
- DOUBLE DUPLEX RECEPTACLE FLUSH IN CEILING - MOUNT FLUSH IN FLOOR WHEN INDICATED IN A FLOOR BOX SYMBOL.
- SIMPLEX RECEPTACLE FLUSH IN CEILING - MOUNT FLUSH IN FLOOR WHEN INDICATED IN A FLOOR BOX SYMBOL.
- SPECIAL RECEPTACLE FLUSH IN CEILING - MOUNT FLUSH IN FLOOR WHEN INDICATED IN A FLOOR BOX SYMBOL.
- PEDESTAL MOUNTED RECEPTACLE
- GFCI PEDESTAL MOUNTED RECEPTACLE
- DUPLEX AFCI RECEPTACLE
- FOUR-PLEX (QUAD) AFCI RECEPTACLE
- FOUR-PLEX(QUAD): TWO ISOLATED GROUND DUPLEX RECEPCALES, WALL MOUNTED.
- TV — RECESSED FLAT PANEL TV/DISPLAY WALL BOX WITH FLUSH GROMMETED COVER PANEL (FSR #PWB-100-???) AND MINIMUM OF (1) 1-1/4"C.O. FROM TOP-MOUNTED L.V. CONDUIT ENTRY BOX TO ACCESSIBLE CEILING. SEE PLANS FOR ANY ADDITIONAL CONDUIT REQUIREMENTS. PROVIDE ADDITIONAL L.V. AND LINE VOLTAGE CONDUIT ENTRY BOXES AS REQUIRED TO ACCOMPLISH WALL BOX CONFIGURATION DEPICTED ON PLANS. FLUSH GROMMETED COVER SHALL BE WHITE, BLACK OR CUSTOM COLOR PER ARCHITECT. WHEN FIELD CONDITIONS PROHIBIT INSTALLATION OF THIS DEVICE (SUCH AS WALL STUD/CAVITY DEPTH OF LESS THAN 3" ETC), CONFIRM VIA WRITTEN RFI THE INSTALLATION OF A TRADITIONAL POWER AND DATA RECEPTACLE INSTALLATION ALONG SIDE CCTV/AV JUNCTION BOX CONSISTING OF 4-GANG DEEP JUNCTION BOX WITH 2"C.O. TO ACCESSIBLE CEILING IN ADDITION TO ANY OTHER CONDUIT REQUIREMENTS DEPICTED ON PLANS. REFER TO ARCHITECTURAL PLANS AND ELEVATIONS FOR MOUNTING HEIGHT.
- DUPLEX RECEPTACLE MOUNTED ABOVE COUNTER
- DUPLEX CONTROLLED RECEPTACLE MOUNTED ABOVE COUNTER
- ISOLATED DUPLEX RECEPTACLE MOUNTED ABOVE COUNTER
- DEDICATED 20A, DUPLEX RECEPTACLE MOUNTED ABOVE COUNTER
- DUPLEX, GFCI RECEPTACLE MOUNTED ABOVE COUNTER
- FOUR-PLEX (QUAD) RECEPTACLE
- FOUR-PLEX (QUAD) GFCI RECEPTACLE
- FOUR-PLEX (QUAD) RECEPTACLE WITH USB
- FOUR-PLEX (QUAD) RECEPTACLE FLUSH IN CEILING
- FOUR-PLEX (QUAD) RECEPTACLE MOUNTED ABOVE COUNTER
- FOUR-PLEX (QUAD) GFCI RECEPTACLE MOUNTED ABOVE COUNTER
- SIMPLEX RECEPTACLE MOUNTED ABOVE COUNTER
- SPECIAL RECEPTACLE MOUNTED ABOVE COUNTER
- PEDESTAL MOUNTED RECEPTACLE
- GFCI PEDESTAL MOUNTED RECEPTACLE
- DUPLEX, AFCI RECEPTACLE MOUNTED ABOVE COUNTER
- FOUR-PLEX (QUAD) AFCI RECEPTACLE
- FOUR-PLEX(QUAD): TWO ISOLATED GROUND DUPLEX RECEPTACLE AND ONE DUPLEX RECEPTACLE, MOUNTED ABOVE COUNTER
- FLUSH MOUNTED WALL BOX WITH FLEX CONNECTIONS TO SYSTEMS FURNITURE, ONE FOR POWER AND ONE FOR DATA. VERIFY CONNECTION REQUIREMENTS WITH MANUFACTURER. SEE PLAN NOTE FOR ADDITIONAL WALL BOX REQUIREMENTS. PROVIDE TANDEM (2) 4S/DP BOX FOR EACH TYPE WITH 1" C FLEX GREY SEALTIGHT CONDUIT FROM BOX TO FURNITURE CONNECTION PANEL WITH ADEQUATE SLACK, MINIMUM 3' LENGTH FIELD CUT TO ADJUST TO FINAL FURNITURE PLACEMENT.

DUPLEX RECEPTACLES INDICATED WITH HALF SHADE, SHALL BE CONTROLLED VIA LIGHTING OCCUPANCY SENSOR OR CONTROL PANEL (LCP). REFER TO LIGHTING OCCUPANCY SENSORS AND CONTROLS LEGEND. WHERE FOUR-PLEX(QUAD) RECEPTACLES ARE PROVIDED AS CONTROLLED, A SINGLE DUPLEX RECEPTACLE SHALL BE CONTROLLED. AT LEAST ONE DUPLEX RECEPTACLE PER FLOOR BOXES, FLUSHED FLOOR MOUNTED RECEPTACLES OR POKE-THRUS SHALL BE CONTROLLED IF NEEDED.

POWER EQUIPMENT AND DEVICE LEGEND

- FLUSH MOUNTED ELECTRICAL PANELBOARD OR LOAD CENTER.
- SURFACE MOUNTED ELECTRICAL PANELBOARD OR LOAD CENTER.
- TELEPHONE TERMINAL BACKBOARD SIZED AS NOTED, REFER TO SYSTEM GROUND DETAIL.
- MAIN SWITCHBOARD. REFER TO PLANS
- DISTRIBUTION BOARD. REFER TO PLANS
- UPS-A — UNINTERRUPTIBLE POWER SUPPLY. REFER TO PLANS
- ATS-1 — AUTOMATIC TRANSFER SWITCH. REFER TO PLANS
- F — FUSED DISCONNECT SWITCH, HP RATED, OR COMBINATION MOTOR STARTER/DISCONNECT SWITCH WITH FUSES PER EQUIPMENT MANUFACTURER AND WEATHERPROOF AS REQUIRED. PROVIDE FINAL CONNECTION TO UNIT EQUIPMENT. SEE MOTORIZED EQUIPMENT SCHEDULE FOR DISCONNECT AND STARTER SIZES.
- MOTOR STARTER COMBINATION SWITCH WITH HOA SELECTOR SWITCH, ON "RUNNING LIGHT" RESET AND OVERLOAD PROTECTION.
- NON-FUSED DISCONNECT SWITCH, HP RATED AND WEATHERPROOF AS REQUIRED. PROVIDE FINAL CONNECTION TO UNIT EQUIPMENT. SEE MOTORIZED EQUIPMENT SCHEDULE FOR DISCONNECT SIZES.
- M CT. — UTILITY COMPANY METER. PROVIDE "CT's" AND "PT's" AS REQUIRED, REFER TO SINGLE LINE DIAGRAM.
- 1 / 150AF / 150AT / 3P — CIRCUIT BREAKER, LINE 1 REPRESENTS FRAME SIZE/RATING; LINE 2 REPRESENTS TRIP SIZE/RATING; LINE 3 REPRESENTS NUMBER OF POLES AND LINE 4 REPRESENTS MISCELLANEOUS BREAKER INFO. (SEE BELOW):
  - SHUNT = PROVIDE SHUNT TRIP MECHANISM.
  - HACR = PROVIDE HACR-RATED BREAKER.
  - GFP = GROUND FAULT PROTECTION
  - CLCB = CURRENT LIMITING CIRCUIT BREAKER
  - SS = PROVIDE SOLID STATE CIRCUIT BREAKER
- 60AS / 3P / 50AF / CLASS J — FUSIBLE SWITCH: LINE 1 REPRESENTS SWITCH SIZE/RATING; LINE 2 REPRESENTS NUMBER OF POLES; LINE 3 REPRESENTS FUSE SIZE/RATING; LINE 4 REPRESENTS FUSE TYPE; LINE 5 REPRESENTS MISCELLANEOUS FUSE INFO. (SEE BELOW):
  - SHUNT= PROVIDE SHUNT TRIP MECHANISM.
  - GFP = GROUND FAULT PROTECTION
  - CLF = CURRENT LIMITING FUSE
- GROUND CONNECTION, SIZE AS INDICATED OR AS REQUIRED.
- SD — SMOKE DETECTOR
- TV — AUDIO/VIDEO OUTLET BOX, PROVIDE 4" SQUARE JUNCTION BOX WITH 2" CONDUIT & PULLSTRING STUBBED 6" ABOVE ACCESSIBLE CEILING. SEE AV DRAWINGS FOR SPECIFICATIONS AND MOUNTING REQUIREMENTS.
- CR — CARD READER OUTLET BOX
- CR K — CARD READER OUTLET BOX WITH KEY PAD
- CR T — CARD READER OUTLET BOX WITH TIME ATTENDANT PAD
  NOTE: REFER TO DETAILS SHEET/S FOR ADDITIONAL INFORMATION AND MOUNTING REQUIREMENTS FOR ALL CARD READERS.
- PP — PUSH PLATE OUTLET BOX, MOUNTING HEIGHT PER ADA DEVICE MOUNTING REQUIREMENTS.
- MS — MASTER CONTROL SWITCH, MOUNTING HEIGHT PER ADA DEVICE MOUNTING REQUIREMENTS.
- J — WALL MOUNTED JUNCTION BOX. MOUNTING HEIGHT AS NOTED. 4S/DP MINIMUM OR AS REQUIRED BY N.E.C..
- J — JUNCTION BOX, MOUNTED IN ACCESSIBLE CEILING FOR APPLICATION DENOTED ON PLAN. 4S/DP MINIMUM OR AS REQUIRED BY N.E.C..
- IM — ELECTRICAL CONNECTION TO INTERACTIVE MARKER-BOARD. COORDINATE CONNECTION TYPE AND REQUIREMENTS WITH MANUFACTURER'S INSTALLATION GUIDES. VERIFY MOUNTING LOCATION AND HEIGHT WITH ARCHITECT AND DISTRICT EQUIPMENT INSTALLER PRIOR TO ROUGH-IN OF ELECTRICAL.
- SURFACE MOUNTED MULTI-OUTLET ASSEMBLY. 18"O.C. UNLESS OTHERWISE INDICATED. REFER TO GENERAL PRODUCT SPECIFICATIONS. PROVIDE ALL COMPONENTS NECESSARY FOR A COMPLETE INSTALLATION.
- T — THERMOSTAT OUTLET BOX, PROVIDE 1/2"C.O. TO RESPECTIVE MECHANICAL UNIT.
- M — EXHAUST FAN, OR MOTOR LOAD. REFER TO MECHANICAL, PLUMBING OR KITCHEN DRAWINGS FOR SPECIFIC LOAD REQUIREMENTS OR AS NOTED.
- 1-PHASE MOTOR - VOLTAGES @ 120V, 208V OR 277V
- 3-PHASE MOTOR - VOLTAGES @ 208V OR 480V
- G — GENERATOR SET
- HD — HAND DRYER
- MCC — MOTOR CONTROL CENTER (SUPPLIED BY OTHER)
- CB — CIRCUIT BREAKER BOX RATING AS SPECIFIED
- GND — GROUND BAR
- ST — SHUNT-TRIP BUTTON - FLUSH MOUNTED UNLESS OTHERWISE NOTED NEMA 3R FOR EXTERIOR LOCATIONS
- VFD — VARIABLE FREQUENCY DRIVE
- DDC — DIRECT DIGITAL CONTROL PANEL
- DD — DUCT SMOKE DETECTOR
- CONDUIT SEAL-OFF FITTINGS
- ELECTRIC DUCT HEATER
- $ HD — HEAVY DUTY SWITCH (MOTOR RATED SWITCH)
- SFD — SMOKE FIRE DAMPER
- $ 3 ab — SINGLE POLE SWITCHES, MOUNTING HEIGHT PER ADA REQUIREMENTS SUBSCRIPTS AT SYMBOL INDICATE THE FOLLOWING:
  - 2 - DOUBLE POLE
  - 3 - THREE WAY
  - 4 - FOUR WAY
  - D - LOW VOLTAGE DIMMER
  - K - KEY OPERATED
  - LV - LOW VOLTAGE
  - M - MOTOR STARTING
  - P - PILOT LIGHT
  - R - REMOTE CONTROL

  NOTE: ALL WALL SWITCHES CONTROLLING EMERGENCY CIRCUITS SHALL BE ENGRAVED WITH "EMERGENCY"
- T — LOW VOLTAGE TRANSFORMER. REFER TO PLANS
- T1A — TRANSFORMER (15KVA OR ABOVE), WITH EQUIPMENT TAG. (TAG INSIDE OR OUTSIDE, DEPENDING ON SIZE). IN MOST CASES, ACTUAL SIZE SHOWN ON PLANS (ELECTRICAL ROOMS).

LIGHTING SYMBOLS

FR1 — LIGHT FIXTURE TAG — LIGHT FIXTURE SYMBOL REFER TO LIGHTING PLAN/S

1. SEE LIGHTING FIXTURE SCHEDULE FOR FIXTURE SYMBOLS AND SPECIFICATION INFORMATION.
2. LIGHTING FIXTURE TAG INDICATES FIXTURE TYPE. REFER TO LIGHTING FIXTURE SCHEDULE.

TYPICAL WIRING DESIGNATIONS

INDICATES MINIMUM WIRE SIZE PER SPECIFICATIONS

ISOLATED GROUND CONDUCTOR
GROUND CONDUCTOR
NEUTRAL CONDUCTOR
PHASE (OR CONTROL) CONDUCTOR

ELECTRICAL GROUND
WYE CONFIGURATION
DELTA CONFIGURATION

CIRCUIT DESIGNATIONS

A1-1 — CIRCUIT NUMBER — PANEL NAME

* INDIVIDUAL CIRCUIT NUMBERS ARE LOCATED AT EACH DEVICE

A1-1 — CIRCUIT NUMBER — PANEL NAME

A1-1 a — SWITCH LEG/S — CIRCUIT NUMBER — PANEL NAME

ANNOTATIONS

- AC-1 — EQUIPMENT CALLOUT, "AC" INDICATES EQUIPMENT TYPE AND "1" INDICATES EQUIPMENT NUMBER. REFER TO DRAWINGS FOR EXACT LOCATION AND ELECTRICAL REQUIREMENTS.
- 3 / E-1 — DETAIL CALLOUT, "3" INDICATES DETAIL NUMBER "E-1" INDICATES SHEET NUMBER.
- FR1 — LIGHTING FIXTURE DESIGNATION
- E-1000 — PLAN NOTE REFERENCE, REFER TO NOTES ON SHEET, OR AS DIRECTED.
- 1 — REVISION REFERENCE.

LPA

ARCHITECTURE ENGINEERING INTERIOR DESIGN LANDSCAPE ARCHITECTURE PLANNING

949-261-1001 Office

LPADesignStudios.com

5301 California Avenue, Suite 100
Irvine, California 92617

LICENSED ARCHITECT NICOLE MEHTA C30830 9/30/2027 RENEWAL DATE STATE OF CALIFORNIA

THE JOBSON FAMILY FOUNDATION

CONCEPT DESIGN:
Landscape Architect
Helle Nebelong
Denmark
hellenebelong.com

This document and all other project documents, ideas, aesthetics and designs incorporated therein are instruments of service. All project documents are copyright protected, are the property of LPA, Inc. (LPA) and cannot be lawfully used in whole or in part for any project or purpose except as set forth in the contractual agreement between LPA and its Client. The unauthorized disclosure and/or use of the project documents (including the creation of derivative works), may give rise to liability for copyright infringement, unlawful disclosure, use or misappropriation of property rights held by LPA. The unauthorized use of the project documents will give rise to the recovery of monetary losses and damages including attorney fees and costs for which the unauthorized user will be held liable.
Project documents describe the design intent of the work and are not a representation of as-built or existing conditions. LPA is not responsible for any discrepancies between the project documents and the existing conditions.

© LPA, Inc.

ALTADENA ARTS MAGNET SCHOOL

743 E CALAVERAS ST.
ALTADENA, CA 91001

Developed for
PASADENA UNIFIED SCHOOL DISTRICT

Revision	Date
Addendum 1	04/28/2026

Submittal	Date
100% SCHEMATIC DESIGN	12/05/2025
DSA SUBMITTAL	02/02/2026
DSA SUBMITTAL V2	03/13/2026

Job Number	33366
Checked By	AG /SC
Scale	

ELECTRICAL NOTES, SYMBOLS, & ABBREVIATIONS

E0.01

LOW VOLTAGE GENERAL NOTES

1. CONDUITS SHALL, (a) CONTAIN NO CONTINUOUS SECTIONS LONGER THAN 30M (98 FT.), AND, (b) CONTAIN NO MORE THAN (2) 90° BENDS OR (1) REVERSE BEND WITHOUT INSTALLING A PULLBOX. CONDUITS IN PLACE OF PULLBOXES ARE UNACCEPTABLE.
2. CONDUITS SHALL CONTAIN PLASTIC OR NYLON PULL TAPE RATED AT 200 LBS. WITH A MINIMUM OF 5 FEET OF EXTRA PULL TAPE COILED AT EACH END.
3. CONDUIT BEND RADIUS SHALL BE (a) A MINIMUM OF 6 TIMES THE INTERNAL CONDUIT DIAMETER FOR CONDUITS 2" IN DIAMETER OR LESS, AND, (b) 10 TIMES THE INTERNAL CONDUIT DIAMETER FOR CONDUITS MORE THAN 2" IN DIAMETER.
4. TERMINATE CONDUITS AND SLEEVES THAT PROTRUDE THROUGH STRUCTURAL FLOORS 2"-3" ABOVE THE FLOOR SURFACE.
5. INSTALL BUSHINGS AND BELL ENDS AS REQUIRED ON ALL CONDUITS.
6. FLEX CONDUIT IS GENERALLY UNACCEPTABLE FOR USE AS A COMMUNICATIONS CONDUIT EXCEPT AT SEISMIC JOINTS AND AS APPROVED IN WRITING BY THE ENGINEER.
7. ALL UNDER SLAB OR IN-SLAB CONDUITS SHALL BE INSTALLED IN A MANNER THAT PREVENTS WATER INFILTRATION OF THE CONDUIT. IT IS THE CONTRACTOR'S RESPONSIBILITY TO ENSURE GROUND WATER, RAIN WATER OR CONSTRUCTION WATER IS PREVENTED FROM ENTERING AND/OR REMOVED FROM THE CONDUITS PRIOR TO PLACEMENT OF COMMUNICATIONS CABLES. SEE SITE UTILITY PLAN NOTES FOR ADDITIONAL UNDERGROUND COMMUNICATIONS CONDUIT SEALING REQUIREMENTS.

   ALL PULLBOXES SHALL BE SIZED AND INSTALLED PER ANSI/TIA/EIA-569B. PULLBOXES FOR UNDER FLOOR CONDUIT RUNS ARE NOT PERMITTED UNLESS OTHERWISE NOTED. PULLBOXES FOR OVERHEAD CONDUIT RUNS SHALL BE LOCATED ABOVE ACCESSIBLE CEILINGS WITHIN THE ACCESSIBLE CEILING SPACE AND SUPPORTED INDEPENDENTLY FROM THE STRUCTURE AND CONDUIT SUPPORTS. PULLBOXES FOR ROOF MOUNTED OR EXTERIOR ABOVE GRADE APPLICATIONS SHALL BE NEMA 3 RATED. PULLBOXES SHALL BE SIZED ACCORDING TO THE FOLLOWING:

8.

CONDUIT SIZE	WIDTH	LENGTH	DEPTH	WIDTH INCREASE PER ADDITIONAL CONDUIT
1"	4"	16"	3"	2"
2"	8"	36"	4"	5"
3"	12"	48"	5"	6"
4"	15"	60"	8"	8"

FOR OTHER CONDUIT SIZES REFER TO ANSI/TIA/EIA 569B TABLE 12. - LATEST PUBLISHED EDITION.

9. CONDUIT(S) SHALL EXIT A PULLBOX ON THE WALL OPPOSITE THE WALL ENTERED.
10. PROVIDE LABELING OF EACH CONDUIT PER GENERAL ELECTRICAL SPECIFICATIONS.
11. PROVIDE INTERNAL/EXTERNAL GAS AND WATER TIGHT MECHANICAL SEALING/PLUGGING OF EACH BUILDING ENTRY CONDUIT AS SPECIFIED ELSEWHERE IN THE DRAWINGS AND SPECIFICATIONS.
12. COORDINATE ALL MOUNTING DIMENSIONS FOR ELECTRICAL DEVICES AND SWITCHES WITH ARCHITECTURAL INTERIOR ELEVATIONS PRIOR TO ROUGH-IN.
13. COORDINATE ALL PENETRATIONS WITH STRUCTURAL PLANS AND DETAILS. NO PENETRATIONS ARE PERMITTED UNLESS SPECIFICALLY NOTED ON STRUCTURAL DRAWINGS.

LIGHTING GENERAL NOTES

1. REFER TO ARCHITECTURAL PLANS FOR EXACT LOCATION & ELEVATION OF ALL LIGHTING FIXTURES AND ALL DEVICES. ALL WALL-MOUNTED DEVICE HEIGHTS SHALL BE VERIFIED WITH THE ARCHITECT PRIOR TO ROUGH-IN.
2. VERIFY EXACT CEILING CONSTRUCTION WITH ARCHITECTURAL REFLECTED CEILING PLAN AND PROVIDE LIGHTING FIXTURES WITH ALL NECESSARY MOUNTING HARDWARE.
3. ALL RECESSED FIXTURES SHALL BE PROVIDED WITH ALL REQUIRED STRUCTURAL SUPPORTS AS REQUIRED BY THE CURRENTLY ADOPTED ISSUE OF THE UNIFORM BUILDING CODE, AS WELL AS ANY LOCAL CODES.
4. ALL COVE MOUNTED FIXTURES SHALL EXTEND THE FULL LENGTH OF THE COVE. CONTRACTOR TO FIELD MEASURE COVE LENGTH AND ORDER QUANTITY OF FIXTURES AS REQUIRED.
5. ALL DIMMING BRANCH CIRCUITS SHALL BE PROVIDED WITH A DEDICATED NEUTRAL CONDUCTOR FOR EACH ZONE/CHANNEL.
6. ALL FLUORESCENT DIMMING ZONES/CHANNELS SHALL BE PROVIDED WITH 3 LINE VOLTAGE CONDUCTORS (NEUTRAL, DIMMED HOT, SWITCHED HOT) OR 2 LINE VOLTAGE CONDUCTORS/2 CONTROL CONDUCTORS AS REQUIRED BY THE CONTROL/BALLAST TYPE.
7. ALL EMERGENCY BATTERY PACK FIXTURES SHALL BE PROVIDED WITH A CONSTANT HOT CONNECTION TO THE CHARGING LEAD. SEE GENERAL LIGHTING FIXTURE SCHEDULE NOTES FOR MORE INFORMATION.
8. REFER TO ARCHITECTURAL REFLECTED CEILING PLANS FOR EXIT SIGN CHEVRONS AND NUMBER OF FACES PER EXIT SIGN. ANY DISCREPANCIES BETWEEN EXIT SIGNS SHOWN ON THE ELECTRICAL AND ARCHITECTURAL PLANS SHALL BE BROUGHT TO THE ATTENTION OF THE ARCHITECT PRIOR TO ORDERING EXIT SIGNS.
9. WHEN EXPOSED CEILINGS OR OPEN GRID CONDITIONS OCCUR, THE CONTRACTOR WILL NEED TO PROVIDE THE FOLLOWING ITEMS:

   - ALL BRANCH CIRCUITS SHALL BE IN EMT.

   - ALL BRANCH CIRCUITS SHALL BE ROUTED NEATLY TRAINED AND IN PARALLEL TO STRUCTURES OR DUCT WORK. THE TERM "TRAINED" MEANS ALL PARALLEL CONDUITS SHALL MAINTAIN THE SAME SPATIAL RELATIONSHIP WITH EACH OTHER FOR ENTIRE RUN TO INCLUDE RADIUS BENDS AND SWEEPS.

   VISUALLY OBJECTIONABLE BRANCH CIRCUITS WILL BE REROUTED AT THE REQUEST OF THE ARCHITECT AT NO ADDITIONAL COST.
10. ALL LED REMOTE INDICATORS FOR DUCT DETECTORS AND FIRE/SMOKE DAMPERS REQUIRED BY THE LOCAL AHJ SHALL BE LOCATED IN CEILINGS IN COORDINATION WITH ARCHITECT PRIOR TO ANY ROUGH-IN.
11. RECESSED FIXTURES LOCATED IN A FIRE-RATED CEILING OR WALL SHALL BE PROVIDED WITH A 5-SIDED RATED ENCLOSURE SO CONSTRUCTED AS TO ALLOW CODE AND MANUFACTURER-REQUIRED CLEARANCES BETWEEN THE FIXTURE AND THE ENCLOSURE.
12. REFER TO GENERAL POWER PLAN NOTES AND COMMUNICATIONS PATHWAYS GENERAL NOTES FOR ADDITIONAL REQUIREMENTS WHEN POWER AND/OR DATA DEVICES ARE SHOWN ON THIS PLAN.
13. CONTRACTOR TO INCLUDE AN ALLOWANCE TO CORE AND SEAL PENETRATIONS THROUGH STRUCTURAL CONCRETE WALLS. COORDINATE LOCATIONS AND REQUIREMENTS WITH ARCHITECTURAL AND STRUCTURAL DRAWINGS.
14. COORDINATE ALL PENETRATIONS WITH STRUCTURAL PLANS AND DETAILS. NO PENETRATIONS ARE PERMITTED UNLESS SPECIFICALLY NOTED ON STRUCTURAL DRAWINGS.

POWER GENERAL NOTES

1. ALL RECEPTACLES ON COMMON WALLS SHALL BE SEPARATE BOXES AND OFFSET 24" MINIMUM.
2. ALL PENETRATIONS THROUGH FIRE RATED WALLS SHALL BE PROTECTED FROM THE SPREAD OF FIRE WITH AN APPROVED FIRESTOP SYSTEM EQUAL OR GREATER THAN THE FIRE RATING OF THE WALL.
3. COORDINATE ALL MOUNTING DIMENSIONS FOR ELECTRICAL DEVICES AND SWITCHES WITH ARCHITECTURAL INTERIOR ELEVATIONS PRIOR TO ROUGH-IN.
4. ALL FURNITURE FEED LOCATIONS TO BE VERIFIED WITH ARCHITECT AND FURNITURE VENDOR PRIOR TO ROUGH IN.
5. ALL FURNITURE WHIPS SHALL BE TRIMMED TO REDUCE EXCESS WHIP LENGTH.
6. WHEN EXPOSED CEILINGS OR OPEN GRID CONDITIONS OCCUR, THE CONTRACTOR WILL NEED TO PROVIDE THE FOLLOWING ITEMS:

   - ALL BRANCH CIRCUITS SHALL BE IN EMT.
   - ALL BRANCH CIRCUITS SHALL BE ROUTED NEATLY AND IN PARALLEL TO STRUCTURES OR DUCT WORK.

   VISUALLY OBJECTIONABLE BRANCH CIRCUITS WILL BE REROUTED AT THE REQUEST OF THE ARCHITECT AT NO ADDITIONAL COST.
7. EXPOSED CABLE/CONDUCTORS INSTALLED IN A PLENUM SPACE SHALL CONFORM TO CEC, ARTICLE 300.22(C).
8. PROVIDE G.F.C.I. TYPE RECEPTACLE(S) WITHIN 6 FEET OF ANY SINK.
9. CONTRACTOR TO INCLUDE AN ALLOWANCE TO CORE AND SEAL PENETRATIONS THROUGH STRUCTURAL CONCRETE WALLS. COORDINATE LOCATIONS AND REQUIREMENTS WITH ARCHITECTURAL AND STRUCTURAL DRAWINGS.
10. COORDINATE ALL PENETRATIONS WITH STRUCTURAL PLANS AND DETAILS. NO PENETRATIONS ARE PERMITTED UNLESS SPECIFICALLY NOTED ON STRUCTURAL DRAWINGS.
11. COORDINATE ALL KITCHEN CONDUIT AND EQUIPMENT ROUGH-IN ON KITCHEN DRAWINGS.

ROOF GENERAL NOTES

1. ELECTRICAL CONTRACTOR SHALL REFER TO MECHANICAL/PLUMBING AND ARCHITECTURAL DRAWINGS FOR EXACT LOCATIONS AND CHARACTERISTICS OF ALL EQUIPMENT LISTED IN SCHEDULE. ANY MODIFICATIONS AND/OR ADDITIONAL WORK NECESSARY SHALL BE INCLUDED IN THE BASE BID.
2. ELECTRICAL CONTRACTOR SHALL VERIFY THE EXACT LOCATION OF ALL CONNECTION POINTS WITH THE EQUIPMENT INSTALLER PRIOR TO ROUGH-IN.
3. ELECTRICAL CONTRACTOR SHALL PROVIDE LOCAL REMOTE DISCONNECTING MEANS FOR ALL ELECTRIC HEATING EQUIPMENT IF REQUIRED BY THE LOCAL ELECTRICAL CODE.
4. ELECTRICAL CONTRACTOR SHALL COORDINATE THE ROUTING OF CONDUIT/WIRING TO ROOF-MOUNTED EQUIPMENT WITH EQUIPMENT INSTALLER PRIOR TO ROUGH-IN. WHERE ROOF-MOUNTED EQUIPMENT IS MANUFACTURED TO BE FED FROM WITHIN MECHANICAL CURB ASSEMBLY - SEPARATE ROOF PENETRATIONS FOR WIRING CONNECTIONS SHALL NOT BE PERMITTED. ALL WIRING SHALL BE BELOW THE ROOF IN AN ACCESSIBLE CEILING SPACE LOCATION.
5. ALL ROOF MOUNTED EQUIPMENT SHALL BE NEMA 3R RATED.

DEMOLITION NOTES

1. THE ELECTRICAL DRAWINGS ARE DIAGRAMMATIC ONLY. DO NOT SCALE THE ELECTRICAL DRAWINGS TO DETERMINE THE LOCATION OF EQUIPMENT OR OUTLETS. SEE ARCHITECTURAL PLANS, WHERE PROVIDED ON PROJECT, FOR EXTENT OF DEMOLITION.
2. THE EXISTING CONDITIONS SHOWN ARE FROM AVAILABLE RECORD DRAWINGS AND SHOWN FOR REFERENCE ONLY. CONTRACTOR SHALL VERIFY ACTUAL EXISTING CONDITIONS AT SITE PRIOR TO SUBMITTING BID. ALL DEMOLITION, ALTERATION, EXTENSION, RELOCATION, REHABILITATION WORK SHALL BE INCLUDED IN CONTRACT. NO ADDITIONAL ALLOWANCE OR CHANGE ORDERS WILL BE ACCEPTED.
3. CONTRACTOR IS RESPONSIBLE TO RELOCATE OR REMOVE FROM WALLS, CEILINGS, FLOOR SPACES, ETC. ANY EXISTING CONDUITS, WIRES, BOXES, FITTINGS, FIXTURES OR OTHER ELECTRICAL EQUIPMENT WHICH INTERFERES WITH PLANNED REMODEL WORK. PROVIDE CIRCUIT CONTINUATION REQUIRED FOR ALL EXISTING OUTLETS, FIXTURES, EQUIPMENT, ETC. SCHEDULED TO REMAIN.
4. NOTIFY THE ENGINEER IMMEDIATELY WHEREVER EXISTING EQUIPMENT IS ENCOUNTERED WHICH MUST BE RELOCATED DUE TO THE NEW CONSTRUCTION, OR NOT INDICATED ON "AS-BUILT" DRAWINGS OR WAS BURIED UNDERGROUND OR EMBEDDED IN STRUCTURE WALLS.
5. CAREFULLY PROTECT ALL WALLS, TRIM, FLOORS, EQUIPMENT, UTILITY LINES AND MATERIALS. WHEN WORKING ON FINISHED SURFACES, LIMIT DAMAGE TO THE SMALLER AREA IF POSSIBLE AND RESTORE TO THE ORIGINAL CONDITION ALL SURFACES WHICH ARE DAMAGED BECAUSE OF THE INSTALLATION OF THIS WORK.
6. EQUIPMENT, MATERIALS AND SUPPLIES TEMPORARILY REMOVED FOR PROTECTION SHALL BE REPLACED IN ORIGINAL LOCATIONS. ANY MATERIALS DAMAGED SHALL BE REPLACED WITH NEW MATERIALS OF LIKE KIND AND QUALITY.
7. DEMOLITION WORK SHALL BE DONE IN A MANNER WHICH WILL NOT CAUSE UNNECESSARY INCONVENIENCE OR DANGER TO USERS OF THE PREMISES AND ADJACENT SITE, AND NOT INTERFERE WITH ITS OPERATION. ANY DEMOLITION WORK TO BE PERFORMED MUST BE PLANNED IN ADVANCE.
8. DO ALL DRILLING, CUTTING, ETC. REQUIRED TO DEMOLISH ELECTRICAL WORK AS INDICATED OR PROVIDE BLANK COVER PLATE ON ALL OUTLETS EXPOSED BY REMOVAL OF FIXTURE OF DEVICES.
9. RESEAL ALL PENETRATIONS OR OPENING THROUGH WALLS, CEILING, FLOORS, ETC., TO MAINTAIN THE RATING OF STRUCTURE.
10. CONTRACTOR SHALL VERIFY EXISTING CONDUIT/CONDUCTOR RUNS ON CIVIL DEMOLITION PLAN, SHEET C1.1. REUSE AS REQUIRED AND REMOVE ALL UNUSED CONDUIT/CONDUCTORS. REMOVE CONDUIT BACK TO SCOPE OF WORK LIMIT LINE. AT EACH END OF FEEDER, TAG AND LABEL CONDUIT. DOCUMENT DETAILED DIMENSIONS ON AS-BUILTS. REMOVE CONDUCTORS BACK TO SOURCE (VERIFY WITH OWNER). UNUSED CONDUIT IN INACCESSIBLE LOCATIONS (WALLS TO REMAIN) CAN BE ABANDONED IN PLACE.
11. CONTRACTOR SHALL FIELD VERIFY EXISTING CONDUIT/WIRING RUNS, REUSE AS REQUIRE AND REMOVED ALL UNUSED CONDUIT/WIRING. UNUSED CONDUIT IN INACCESSIBLE LOCATIONS (WALLS TO REMAIN) CAN BE ABANDONED IN PLACE. REMOVE UNUSED WIRING.
12. CONTRACTOR TO VERIFY CIRCUIT NUMBER AND LOADS FOR ALL EXISTING EQUIPMENT PRIOR TO INSTALLATION OF NEW OR RELOCATED ELECTRICAL EQUIPMENT. REASSIGN CIRCUITS AND LOADS ACCORDINGLY. PROVIDE COMPLETE "AS BUILT" DRAWINGS AND TYPEWRITTEN DIRECTORIES FOR PANELS.
13. WHERE NECESSARY TO SHUT OFF UTILITY SERVICES OR CAUSE INTERRUPTION TO POWER OR SIGNAL SYSTEMS WHILE A BUILDING IS OCCUPIED OR THAT EFFECT ADJACENT BUILDINGS, SCHEDULE OUTAGES OR INTERRUPTIONS WITH THE OWNER, BUILDING OCCUPANTS AND/OR ADJACENT BUILDING OWNER(S) AND OCCUPANTS PRIOR TO CONDUCTING OUTAGE(S) OR INTERRUPTIONS.

GENERAL NOTES (con't)

34. ALL EXISTING SITE RELATED ELECTRICAL EQUIPMENT (I.E. UNDERGROUND UTILITIES, DUCTS, STRUCTURES, PULL BOXES, ETC.) LOCATIONS ARE DIAGRAMMATIC IN NATURE AND ONLY REFLECT APPROXIMATE LOCATIONS, QUANTITIES, AND/OR ROUTING INFORMATION. ALL REFERENCED INFORMATION HAS EITHER BEEN SURVEYED, REPORTED BY THE OWNER/ OWNERS REP, AND/OR REFERENCED ON AN AS-BUILT RECORD DOCUMENTS. ALL EXISTING ELECTRICAL EQUIPMENT REFERENCE D ON THESE DRAWINGS IS TO BE FIELD VERIFIED BY THE CONTRACTOR PRIOR TO COMMENCEMENT OF BY ACCEPTING THESE PLANS OR PROCEEDING WITH ELECTRICAL SCOPE OF WORK, AGREES TO ACCEPT LIABILITY AND SHALL RENDER THE ENGINEER OF RECORD HARMLESS FOR ANY ELECTRICAL EQUIPMENT NOT REPORTED TO THE ENGINEER DURING THE DESIGN PROCESS. THE CONTRACT TO TAKE THE REQUIRED PRECAUTIONARY MEASURES TO ENSURE ALL EXISTING ELECTRICAL EQUIPMENT IS PROTECTED IN PLACE.
35. ANY EXISTING BUILDING STRUCTURES OR SURFACES DAMAGED BY DEMOLITION OR DURING INSTALLATION ACTIVITIES SHALL BE REPAIRED, PATCHED, AND/OR REFINISHED TO THE SATISFACTION OF THE OWNER AND DSA.
36. ALL EXISTING ELECTRICAL EQUIPMENT INDICATED TO BE DEMOLISHED SHALL BE REMOVED ENTIRELY AND ALL AFFECTED SURFACES OR STRUCTURES SHALL BE REPAIRED, REPLACED, AND/OR REFINISHED TO MATCH THE ADJACENT SURFACES OR DAMAGED ITEM(S).
37. FOR CLARITY ONLY RECONSTRUCTION OR NEW WORK RELATED ELEMENTS AND SELECT EXISTING FACILITIES SPECIFICALLY REQUIRING COORDINATION WITH ANY NEW WORK.
38. ALL CONDUITS, BOXES, SURFACE MOUNTED RACEWAYS, SUPPORT DEVICES, AND ASSOCIATED FITTINGS SHALL BE MOUNTED IN CONCEALED LOCATIONS ABOVE CEILINGS, DUCTS, TRUSSES, BEAMS, ETC. IN AREAS WHERE A CONCEALED MOUNTING LOCATION IS NOT AVAILABLE EQUIPMENT SHALL BE PAINTED TO MATCH THE ADJACENT SURFACES.
39. ANY PENETRATIONS BY CONDUITS OR OTHER ELECTRICAL EQUIPMENT THROUGH A FIRE RATED WALL - WHETHER EXISTING OR NEW - SHALL MAINTAIN THE APPROPRIATE FIRE RATING BY SEALING THE PENETRATION WITH THE APPROPRIATE UL-LISTED FIRE-STOP MATERIAL/SYSTEM.
40. ELECTRICAL CONTRACTOR SHALL PREPARE AND SUBMIT THE FOLLOWING CALIFORNIA ENERGY COMMISSION T-24 CERTIFICATE OF ACCEPTANCE LTG-1-1, PARTS 1, 2, & 3; LIGHTING CONTROL LTG-2-A; AND/OR AUTOMATIC DAYLIGHTING CONTROL LTG-3-A, AS THEY APPLY TO THE BUILDING DEPARTMENT PRIOR TO ISSUANCE OF THE CERTIFICATE OF OCCUPANCY.
41. LEED COMMISSIONING NOTE: ELECTRICAL CONTRACTOR TO COORDINATE AND PROVIDE ASSISTANCE FOR COMPLETE COMMISSIONING OF ALL SYSTEMS IDENTIFIED IN COMMISSIONING AGENT'S DOCUMENTS, INCLUDING BUT NOT LIMITED TO LIGHTING CONTROLS, ELECTRONIC METERING, ETC.

SITE PLAN GENERAL NOTES

1. ALL INFORMATION REFERENCED IS PRELIMINARY IN NATURE AND DOES NOT REPRESENT FINAL DESIGN DOCUMENTS. ALL INFORMATION AND REQUIREMENTS RELATIVE TO UTILITY INFRASTRUCTURE SHALL BE COORDINATED, VERIFIED, AND INSTALLED PER FINAL UTILITY COMPANY DESIGN DOCUMENTS.
2. ROUTING OF ALL CONDUIT SHALL BE COORDINATED IN THE FIELD AND CONFIRMED BY ENGINEER AND ARCHITECT.
3. COORDINATE ALL CONDUIT ROUTING, ELECTRICAL DEVICE LOCATIONS, PULL BOX LOCATIONS, ETC. WITH LANDSCAPE PLANTING PLANS TO AVOID CONFLICTS WITH TREES, SHRUBS, ETC.
4. ALL CONDUCTOR AND CABLE RUNS ARE TO BE CONTINUOUS. NO CONDUCTORS OR LOW VOLTAGE CABLING TO BE INSTALLED AS PART OF INCREMENT ONE. ALL CONDUCTORS AND LOW VOLTAGE CABLING TO BE INSTALLED AS PART OF INCREMENT TWO AND TERMINATED INSIDE OF THE BUILDING.
5. ALL CONDUIT SHALL BE PROVIDED WITH PROPERLY SIZED PULL STRING PER UTILITY COMPANY STANDARDS.
6. ALL EQUIPMENT MOUNTED OUTDOORS SHALL BE INSTALLED IN A WEATHERPROOF NEMA 3R ENCLOSURE.
7. SEE ARCHITECTURAL/LANDSCAPE ARCHITECTURAL PLANS FOR EXACT LOCATIONS OF FIXTURES, PULLBOXES, MANHOLES, OTHER ELECTRICAL DEVICES, ETC. COORDINATE ALL UNDERGROUND STRUCTURES AND CONDUIT ROUTING WITH LANDSCAPE ARCHITECT PRIOR TO ROUGH-IN TO ENSURE THAT SUCH ITEMS ARE NOT PLACED IN CRITICAL LANDSCAPE PLANTING/HARDSCAPE AREAS.
8. PROVIDE CONCRETE ENCASEMENT FOR ALL TRENCHES WITH MORE THAN THREE (3) CONDUITS. ENCASE PER UTILITY COMPANY REQUIREMENTS.
9. CONTRACTOR TO ABANDON BUT NOT DEMOLISH ALL CONDUITS IN FAIRMONT.

SITE UTILITY PLAN GENERAL NOTES

THESE NOTES ESTABLISH MINIMUM QUALITY LEVELS AND COORDINATION REQUIREMENTS. RESPECTIVE UTILITY COMPANY PLANS AND REQUIREMENTS TAKE PRECEDENCE OVER THESE NOTES WITH REGARD TO RESPECTIVE UTILITY COMPANY CONDUIT AND UNDERGROUND STRUCTURE SYSTEMS.

1. CALL UNDERGROUND SERVICE ALERT (USA) AT 1 (800) 422-4133 OR APPLICABLE STATE AND LOCAL DIG SAFE OR UNDERGROUND ALERT HOTLINES PRIOR TO CONSTRUCTION START.
2. COORDINATE ALL UNDERGROUND STRUCTURES AND CONDUIT ROUTING WITH LANDSCAPE ARCHITECT PRIOR TO ROUGH-IN TO ENSURE THAT SUCH ITEMS ARE NOT PLACED IN CRITICAL LANDSCAPE PLANTING/HARDSCAPE AREAS.
3. VAULTS, MAINTENANCE HOLES (MH's) AND CONDUITS SHALL MAINTAIN A MINIMUM COVER OF 24" BELOW FINAL SURFACE AT ALL CONDITIONS. INCLUDE ALL COSTS IN BASE BID TO MEET UTILITY COMPANY REQUIREMENTS WHICH MAY REQUIRE GREATER MINIMUM CONDUIT DEPTHS.
4. VAULTS, MH's AND PULLBOXES (PB's) SHALL BE EQUIPPED WITH KNOCKOUT PANELS OR PRE-CAST INDIVIDUAL CONDUIT OPENINGS. CONDUITS SHALL ONLY ENTER AND EXIT ON END/SHORT WALLS. CONDUITS MAY NOT ENTER AND EXIT ON SIDE/LONG WALLS, CEILINGS OR FLOORS UNLESS OTHERWISE NOTED.
5. CUT DUCTS FLUSH WITH INTERIOR VAULT/MH/PB WALL.
6. GROUT AROUND DUCT ENTRANCES ON VAULT/MH/PB WALLS.
7. SLURRY BACKFILL AROUND DUCTS WITHIN 5 FEET OF VAULT/MH/PB TO PREVENT SHEARING.
8. CONDUITS PASSING UNDER THE BUILDING PERIMETER SHALL BE ENCASED IN LIGHTWEIGHT CONCRETE OR WATER-IMPERVIOUS CLAY TO PREVENT WATER INFILTRATION. SEE ELECTRICAL SPECIFICATIONS FOR ADDITIONAL INFORMATION.
9. CONDUIT BEND RADIUS FOR BUILDING ENTRANCES AND AT POLES SHALL BE A MINIMUM OF 24" FOR CONDUITS WITH LESS THAN 2" INTERNAL DIAMETER AND A MINIMUM OF 48" FOR CONDUITS WITH MORE THAN 2" INTERNAL DIAMETER.
10. PREFERRED CONDUIT SWEEP RADIUS BETWEEN VAULTS IS 25 FEET. UNDER NO CIRCUMSTANCES SHALL THE CONDUIT SWEEP RADIUS BE LESS THAN 12.5 FEET. MAXIMUM OF 90 DEGREES PER SWEEP AND LIMITED TO NO MORE THAN (2) 90 DEGREE SWEEPS BETWEEN VAULTS.
11. VAULTS/MH's/PB's ARE TO BE EQUIPPED WITH RACKING, GROUNDING LUGS, AND BOLT-DOWN LIDS UNLESS OTHERWISE NOTED.
12. VAULTS AND MH's TO BE EQUIPPED WITH ROUND COVERS, EXTENSION RINGS AS REQUIRED, LADDERS AND (3) SEGMENTS OF 6 FOOT HIGH CABLE RACKING PER EACH LONG WALL.
13. LABEL ALL NON-UTILITY COMMUNICATION VAULT/MH/PB COVERS WITH "COMMUNICATIONS" UNLESS OTHERWISE NOTED ON PLANS.
14. COORDINATE FINAL VAULT/MH/PB OPENING HEIGHT WITH G.C. PRIOR TO ROUGH-IN TO ENSURE FINAL GRADE DOES NOT SLOPE INTO VAULT/MH/PB OPENING.
15. CONTRACTOR TO PROVIDE A MINIMUM OF 8" DEEP COMPACTED 1/2" DIAMETER GRAVEL, UNDER ALL VAULTS, MH's OR PB's TO ENSURE UNIFORM DISTRIBUTION OF SOIL PRESSURE ON THE FLOOR AND BE ABLE TO DISSIPATE WATER OUT OF THE VAULT, MH OR PB.
16. ALL VAULTS/MH's/PB's WITHOUT GROUNDING LUGS SHALL HAVE AN 8' x 3/4" COPPER GROUND ROD DRIVEN THRU THE FLOOR TO ALLOW GROUNDING OF ITEMS WITHIN.
17. ALL VAULTS/MH's/PB's SHALL BE PROVIDED WITH TRAFFIC RATED COVERS WHEN LOCATED IN PAVED AREAS UTILIZED FOR VEHICLE TRAFFIC.
18. IF THE WATER OR MOISTURE BARRIER ON OR NEAR THE FOUNDATION OF A BUILDING IS DISTURBED IN ANY MANNER BY EXCAVATION OR OTHER CONSTRUCTION WORK. THE MOISTURE BARRIER MUST BE REPAIRED FOLLOWING THE RECOMMENDATIONS OF THE MANUFACTURER OF THE ORIGINAL BARRIER PRODUCT.
19. THE CONTRACTOR SHALL INCLUDE IN BASE BID ALL COSTS TO COMPLY WITH ALL REQUIREMENTS FOR CONFINED SPACE ENTRY PER THE OSHA REQUIREMENTS 29 CFR-1910.146, 29 CFR-1910.268, ETC. DURING ANY CONFINED SPACE ENTRY.
20. ANY DUCTS LEAVING A VAULT, MH OR PB ROUTED INTO A FACILITY SHALL BE PLUGGED AT EACH END USING REMOVEABLE MECHANICAL PLUGS DESIGNED TO PREVENT WATER AND GAS FROM ENTERING THE FACILITY.
21. SEE ELECTRICAL SPECIFICATIONS AND PLAN DETAILS FOR ADDITIONAL REQUIREMENTS REGARDING UNDERGROUND CONDUITS AND IN-GRADE VAULT/MH/PB/JUNCTION BOXES.

GENERAL NOTES:

1. THE ELECTRICAL CONTRACTOR (EC) SHALL INCLUDE AND PROVIDE IN BID ALL LABOR AND MATERIALS NECESSARY FOR A COMPLETE AND OPERATIONAL INSTALLATION OF ALL ELECTRICAL SYSTEMS.
2. EC SHALL COORDINATE AND OBTAIN ALL APPROVALS, PERMITS, AND DOCUMENTS FROM REGULATORY AGENCIES AND UTILITY COMPANIES.
3. ALL CONDUIT RACEWAY SYSTEMS ARE TO BE INSTALLED AS FOLLOWS:
   a. RIGID GALVANIZED STEEL IS TO BE INSTALLED IN ALL AREAS WHICH ARE EXPOSED TO WEATHER AND/OR PHYSICAL DAMAGE.
   b. FLEXIBLE METALLIC CONDUIT I S PERMITTED FOR SHORT CONNECTIONS TO LIGHT FIXTURES (6'-0" MAX). FLEXIBLE CONDUIT SHALL ALSO BE INSTALLED FOR EQUIPMENT REQUIRING VIBRATION ISOLATION AND HORIZONTAL RUNS IN WOODEN STUD WALLS.
   c. ELECTRICAL METALLIC TUBING (EMT) WITH COMPRESSION TYPE FITTINGS SHALL BE USED FOR BUILDING INTERIOR WORK.
   d. PVC CONDUIT SHALL BE USED FOR UNDERGROUND CONDUITS. ROUTE CODE SIZED GROUND WIRE INSIDE OF CONDUIT. CONDUIT RISERS AND STUBS ABOVE GRADE SHALL BE I.M.C. WITH HALF-LAPPED TAPE COVERING OR PVC COATING.
4. UNLESS OTHERWISE NOTED OR REFERENCED ON THE DRAWINGS ALL NEW ELECTRICAL WIRING IS TO BE 600V RATED COPPER WITH TYPE "THHN/THWN" INSULATION.
5. ALL MOUNTING HEIGHTS REFERENCED ON DRAWINGS ARE MEASURED FROM FINISHED FLOOR UNLESS OTHERWISE REFERENCED OR INDICATED ON THE DRAWINGS.
6. ALL ELECTRICAL EQUIPMENT LOCATIONS (LIGHTING, RECEPTACLE, FLOOR BOX, ETC.) ARE TO BE VERIFIED WITH THE ARCHITECT AND/OR EQUIPMENT SUPPLIER PRIOR TO BEGINNING ANY ROUGH-IN.
7. ALL LIGHTING FIXTURES SHALL BE MOUNTED AND SUPPORTED IN ACCORDANCE WITH OSHA STANDARDS, AND ALL STATE, LOCAL, SEISMIC, AND NATIONAL ELECTRIC CODES.

   EQUIPMENT ANCHORAGE NOTE:

   THE ATTACHMENT OF THE FOLLOWING ITEMS SHALL BE DESIGNATED TO RESIST THE FORCES PRESCRIBED ABOVE, BUT NEED NOT BE DETAILED ON THE PLANS, AND THE PROJECT INSPECTOR WILL VERIFY THAT THESE ITEMS (EQUIPMENT) HAVE BEEN ANCHORED:

   A. EQUIPMENT WEIGHING LESS THAN 400 PUNDS AND SUPPORTED DIRECTLY ON THE FLOOR OR ROOF.
   B. FURNITURE REQUIRED TO BE ATTACHED IN ACCORDANCE WITH ASCE 7-10, SECTION 13.5
   C. TEMPORARY OR MOVABLE EQUIPMENT WITH FLEXIBLE CONNECTION TO POWER OR UTILITIES.
   D. EQUIPMENT WEIGHING LESS THAN 20 PUNDS SUPPORTED BY VIBRATION ISOLATORS.
   E. EQUIPMENT WEIGHING LESS THAN 20 POUNDS SUSPENDED FROM A ROOF OR FLOOR OR HUNG ON A WALL.

   PIPING, DUCTWORK, AND ELECTRICAL DISTRIBUTION SYSTEMS BRACING NOTE:

   PIPING, DUCTWORK, AND ELECTRICAL DISTRIBUTION SYSTEMS SHALL BE BRACED TO COMPLY WITH THE FORCES AND DISPLACEMENTS PRESCRIBED IN ASCE 7-10 SECTION 13.3 AS DEFINED IN ASCE 7-10 SECTION 13.6.8, 13.6.7, 13.6.5.6 AND 2013 CBC, SECTIONS 1615A.1.20, 1615A.1.21 AND 1615A.1.22.

   THE BRACING AND ATTACHMENTS TO THE STRUCTURE SHALL BE DETAILED ON THE APPROVED DRAWINGS OR THEY SHALL COMPLY WITH ONE OF THE OSHPD PRE-APPROVALS (OPA #), AS MODIFIED TO SATISFY ANCHORAGE REQUIREMENTS OF ACI 318, APPENDIX D.

   COPIES OF THE MANUAL SHALL BE AVAILABLE ON THE JOBSITE PRIOR TO THE START OF HANGING AND BRACING OF THE PIPE, DUCTWORK, AND ELECTRICAL DISTRIBUTION SYSTEMS.

   THE STRUCTURAL ENGINEER OF RECORD SHALL VERIFY THE ADEQUACY OF THE STRUCTURE TO SUPPORT THE HANGER AND BRACE LOADS.

1. THE DRAWINGS INCLUDED IN THIS DOCUMENT SET ARE DIAGRAMMATIC. THEY ARE REPRESENTATIVE OF THE ENGINEER OF RECORDS DESIGN INTENT FOR ALL ELECTRICAL DEVICES/EQUIPMENT AND THE INDIVIDUAL POWER FEEDS THEY ARE TO BE CONNECTED TO. THE SELECTED EC SHALL BE RESPONSIBLE FOR PROVIDING ALL J-BOXES, CONDUIT, WIRING/ CABLING, ETC. AS REQUIRED FOR A COMPLETE AND OPERATIONAL ELECTRICAL INSTALLATION.
2. ALL ELECTRICAL EQUIPMENT (PANELS, RECEPTACLES, J-BOXES, ETC.) SHALL BE WEATHERPROOF AND/OR INSTALLED IN A NEMA 3R ENCLOSURE WHERE APPLICABLE OR INSTALLED OUTDOORS. PROVIDE PLAN REFERENCED DETAILS FOR ALL PANELS/EQUIPMENT WEIGHING ≥ 20 POUNDS HUNG FROM ROOF/FLOOR ABOVE OR ON WALL OR ≥ 400 POUNDS SUPPORTED ON ROOF/FLOOR.
3. ALL ELECTRICAL WORK SHALL BE PERFORMED ACCORDING TO STATE, LOCAL, NATIONAL, AND DISTRICT STANDARDS AND CODES. COORDINATE SPECIFIC REQUIREMENTS WITH DISTRICT STANDARDS AND AUTHORITY HAVING JURISDICTION.
4. ALL ELECTRICAL EQUIPMENT SHALL BE NEW AND IS TO BE CLEARLY LABELED/IDENTIFIED AS UNDERWRITER LABORATORIES (UL) COMPLIANT UNLESS OTHERWISE NOTED OR REFERENCED IN THE DRAWINGS OR SPECIFICATIONS.
5. EC IS RESPONSIBLE FOR SECURING ALL REQUIRED BUILDING PERMITS AND SHALL INCLUDE THE COST TO SECURE BUILDING PERMITS IN THEIR FINAL BID.
6. UNLESS OTHERWISE WRITTEN, STATED, OR REFERENCED IN DRAWINGS OR SPECIFICATIONS CONTRACTOR SHALL GUARANTEE THE COMPLETE ELECTRICAL INSTALLATION FOR A PERIOD OF 1-YEAR.
7. ALL ELECTRICAL DISTRIBUTION EQUIPMENT (PANELS, DISTRIBUTION BOARDS, TRANSFORMERS, ETC), FEEDERS (CONDUIT, CONDUCTOR SIZE, AND QUANTITY), MECHANICAL EQUIPMENT, ELEVATORS, VARIABLE FREQUENCY DRIVES (VFD'S), ETC. MAY ONLY BE REFERENCED ON THE SINGLE-LINE DRAWING AND NOT INDIVIDUAL PLAN SHEETS. EC SHALL REVIEW AND VERIFY ALL REFERENCED INFORMATION ON THE SINGLE-LINE DRAWING.
8. EC SHALL BE RESPONSIBLE FOR ALL REQUIRED SAW-CUTTING, CORE DRILLING, PATCHING, REFINISHING, ETC. AS REQUIRED FOR INSTALLATION OF ELECTRICAL EQUIPMENT AND SYSTEMS. ANY PENETRATIONS OR OPENINGS MADE IN WALLS OR STRUCTURES SHALL BE PATCHED AND/OR SEALED AS REQUIRED TO MAINTAIN THE INTEGRITY AND/OR RATING OF THE WALL OR STRUCTURE. NO STRUCTURE MEMBER SHALL BE NOTCHED/CUT/DRILLED/BORED UNLESS SPECIFICALLY DETAILED ON THE DSA APPROVED DRAWINGS. ALTERNATIVELY, OBTAIN APPROVAL FROM STRUCTURAL ENGINEER OF RECORD AND DSA IF NO SUCH DETAILS OCCUR PRIOR TO INITIATING SUCH WORK.
9. EC SHALL VISIT THE SITE PRIOR TO SUBMISSION OF THEIR FINAL BID TO VERIFY ALL EXISTING SITE CONDITIONS WHICH MAY AFFECT THE COMPLETION OF THE ELECTRICAL INSTALLATION. ALL METHODS AND REQUIREMENTS FOR \ INSTALLATION SHALL BE DETERMINED PRIOR TO BID DATE. ELECTRICAL EC SHALL NOTIFY THE ENGINEER OF RECORD OF ANY REQUIRED MODIFICATIONS WHICH ARE NOT REFERENCED ON THESE ELECTRICAL PLANS. SUBMITTAL OF THE EC'S BID DEMONSTRATES THE CONTRACTOR'S AWARENESS OF ALL SITE CONDITIONS AND REQUIRED WORK TO BE PERFORMED.
10. ALL CEILINGS AND CEILING SYSTEMS AS A RULE ARE CONSIDERED TO BE INACCESSIBLE. ALL ELECTRICAL DEVICES AND EQUIPMENT INSTALLED ABOVE CEILINGS ARE TO BE MOUNTED IN A LOCATION WHICH IS ACCESSIBLE. IN SITUATIONS WHERE ELECTRICAL DEVICES AND EQUIPMENT MUST BE INSTALLED IN AN AREA WHICH IS INACCESSIBLE, EC SHALL INSTALL AN ADEQUATELY SIZED, CODE COMPLIANT ACCESS PANEL AS REQUIRED BY CURRENT CODES - LOCATION OF THE REQUIRED ACCESS PANEL SHALL BE COORDINATE WITH THE ARCHITECT AND INTERIOR DESIGNER PRIOR TO ROUGH-IN.
11. EC IS RESPONSIBLE FOR COMPLETING ALL FINAL ELECTRICAL CONNECTIONS TO OWNER FURNISHED EQUIPMENT AND SHALL PROVIDE ALL MOTOR START SWITCHES, DISCONNECTS, ETC. AS REQUIRED.
12. ALL ELECTRICAL EQUIPMENT CONNECTIONS, MOUNTING LOCATIONS, ELECTRICAL REQUIREMENTS, ETC. ARE TO BE COORDINATED AND VERIFIED PRIOR TO COMMENCEMENT OF ELECTRICAL ROUGH-IN.
13. EC TO SUBMIT SHOP DRAWINGS FOR THE APPROVAL OF THE ELECTRICAL ENGINEER OF RECORD FOR ALL ELECTRICAL EQUIPMENT AND MATERIALS TO BE UTILIZED IN THE ELECTRICAL INSTALLATION. ALL APPROVALS BY THE ENGINEER OF RECORD MUST BE SECURED PRIOR TO COMPLETION OF ANY PURCHASE ORDERS OR ROUGH-IN WORK.
14. THESE ELECTRICAL DRAWINGS AND ASSOCIATED SPECIFICATIONS ARE TO BE CONSIDERED CONTRACT DOCUMENTS FOR AGENCY REVIEW/APROVAL AND EC BIDDING PURPOSES.
15. THE COMPLETE ELECTRICAL SYSTEM SHALL BE GROUNDED IN ACCORDANCE WITH NEC/CEC ARTICLE 250. ALL POWER AND LIGHTING CIRCUITS SHALL BE INSTALLED WITH A MINIMUM #12AWG CU GROUND WIRE UNLESS OTHERWISE NOTED OR REFERENCED.
16. EC TO PROVIDE ENGRAVED PHENOLIC NAMEPLATES ON ALL DISCONNECT SWITCHES, DISTRIBUTION EQUIPMENT, J-BOXES ETC. WITH METALLIC COVERS.
24. ALL COVER PLATES FOR LIGHT SWITCHES AND OUTLETS SHALL BE STAINLESS STEEL WITH PANEL AND CIRCUIT ENGRAVED NAMEPLATES FOR THE FOLLOWING AREAS: ALL CLASSROOM/RECREATIONAL/THEATRICAL ETC. BUILDINGS ON ELEMENTARY SCHOOL/MIDDLE SCHOOL/HIGH SCHOOL/COLLEGE/UNIVERSITY CAMPUSES; AND IN RESTROOMS/LAB SPACES/HEALTHCARE FACILITIES/ABOVE COUNTER SPACES/KITCHENS/SHOP AREAS/ANY HIGH ABUSE AREAS/ETC IN ALL CIVIC/INSTITUTIONAL/HEALTHCARE/OFFICE-WORKSPACE ENVIRONMENTS - UNLESS OTHERWISE NOTED. PLASTIC COVER PLATES WITH THE APPROPRIATE COLOR SHALL BE PERMITTED IN ALL OTHER AREAS - UNLESS OTHERWISE CODES. IN INSTANCES WHERE PLASTIC COVER PLATES ARE UTILIZED EC SHALL WALL MOUNT AN ENGRAVED PHENOLIC NAMEPLATE WITH THE PANEL AND CIRCUIT NUMBER DIRECTLY ABOVE THE DEVICE.
25. AT THE COMPLETION OF THE PROJECT THE EC SHALL PROVIDE THE OWNER WITH A COMPLETE SET OF AS-BUILT ELECTRICAL DRAWINGS.
26. ANY AND ALL WORK THAT REQUIRES AN INTERRUPTION TO A BUILDING(S) ELECTRICAL SERVICE MUST BE COORDINATED WITH THE DISTRICT A MINIMUM OF 48 HOURS IN ADVANCE. ANY SERVICE DOWNTOWN SHALL NOT OCCUR DURING SCHOOL HOURS.
27. EC SHALL BE RESPONSIBLE FOR FOR ENSURING THAT ALL LOW VOLTAGE SYSTEMS ARE COMPATIBLE AND ARE COMPLETE AND OPERATIONAL.
28. EC SHALL PERMANENTLY TAG ALL CONDUCTORS IN EACH ELECTRICAL AND LOW VOLTAGE SYSTEM AS REFERENCED IN THE SPECIFICATIONS.
29. ANY SURFACE MOUNTED EXPOSED CONDUIT IN VIEW OF THE PUBLIC SHALL BE PAINTED TO MATCH THE FINISH OF THE SURFACE TO WHICH IT IS MOUNTED WITH TWO (2) COATS OF PAINT. ALL EXTERIOR SURFACE MOUNTED EXPOSED CONDUITS ARE TO BE PAINTED WITH TWO (2) COATS OF WEATHERPROOF LATEX PAINT.
30. EC TO PROVIDE ALL CONDUIT ONLY (C.O.) INFRASTRUCTURE WITH A 3/16" NYLON PULL ROPE. LABEL PULL ROPE AT EACH END WITH THE LOCATIONS OF ORIGIN AND TERMINATION.
31. IN INSTANCES WHERE A CONFLICT BETWEEN THE ELECTRICAL DRAWINGS AND THE SPECIFICATIONS FOR THE PROJECT EXISTS, THE EC SHALL ADHERE TO THE MORE STRINGENT REQUIREMENT.
32. THE SEISMIC ANCHORAGE OF ELECTRICAL EQUIPMENT SHALL CONFORM TO C.C.R. TITLE 24, 2010 CBC SECTION 1615A AND ASCE7-05 SECTION 13.3 THRU 13.6. ANCHORAGE DETAILS NOT SHOWN ON THE APPROVED PLANS OR OTHERWISE APPROVED BY DSA ARE SUBJECT TO FIELD APPROVAL BY THE ARCHITECT AND/OR STRUCTURAL ENGINEER OF RECORD AND DSA.
33. ELECTRICAL DRAWINGS ARE DIAGRAMMATIC. AS SUCH, ALL ELECTRICAL EQUIPMENT LOCATIONS, CONDUIT ROUTING, ETC. ARE NOT PRECISE AND SHALL BE COORDINATED, VERIFIED, AND DETERMINED IN THE FIELD. EC TO INSTALL ALL ELECTRICAL EQUIPMENT AND ROUTE ALL CONDUITS IN LOCATIONS WHICH MEET CODE REQUIREMENTS FOR ACCESSIBILITY/MOUNTING AND DO NOT INTERFERE WITH ANY BUILDING STRUCTURES, UTILITIES, OR OTHER TRADE EQUIPMENT.
34. ELECTRICAL EQUIPMENT SHALL BE LISTED BY A CITY OF IRVINE RECOGNIZED ELECTRICAL TESTING LABORATORY OR APPROVED BY THE DEPARTMENT.

LPA
ARCHITECTURE ENGINEERING INTERIOR DESIGN LANDSCAPE ARCHITECTURE PLANNING
949-261-1001 Office
LPADesignStudios.com
5301 California Avenue, Suite 100
Irvine, California 92617

LICENSED ARCHITECT NICOLE MEHTA C30830 9/30/2027 RENEWAL DATE STATE OF CALIFORNIA

THE JOBSON FAMILY FOUNDATION

CONCEPT DESIGN:
Landscape Architect
Helle Nebelong
Denmark
hellenebelong.com

This document and all other project documents, ideas, aesthetics and designs incorporated therein are instruments of service. All project documents are copyright protected, are the property of LPA, Inc. (LPA) and cannot be lawfully used in whole or in part for any project or purpose except as set forth in the contractual agreement between LPA and its Client. The unauthorized disclosure and/or use of the project documents (including the creation of derivative works), may give rise to liability for copyright infringement, unlawful disclosure, use or misappropriation of property rights held by LPA. The unauthorized use of the project documents will give rise to the recovery of monetary losses and damages including attorney fees and costs for which the unauthorized user will be held liable.
Project documents describe the design intent of the work and are not a representation of as-built or existing conditions. LPA is not responsible for any discrepancies between the project documents and the existing conditions.

© LPA, Inc.

ALTADENA ARTS MAGNET SCHOOL

743 E CALAVERAS ST.
ALTADENA, CA 91001

Developed for
PASADENA UNIFIED SCHOOL DISTRICT

Revision	Date
Addendum 1	04/28/2026

Submittal	Date
100% SCHEMATIC DESIGN	12/05/2025
DSA SUBMITTAL	02/02/2026
DSA SUBMITTAL V2	03/13/2026

Job Number	33366
Checked By	AG /SC
Scale	

GENERAL NOTES

E0.20

LIGHTING FIXTURE SCHEDULE

			Electrical			Source					Manufacturer						
Type	Name	Description	Apparent Load	Voltage	Driver	Lumens	CCT	CRI	Conditi	BUG Rating	Manufacturer	Model Number	Equal 1	Equal 2	Finish	Location
ZN1-2	20' Single head Parking pole	"Galeon" series, 20' pole with type 2R optics, size 16 light squares with 4 light squares, level 3 output, single head with integral occ sensor with dimming to 50% and photocell, include round straight aluminum pole, 4" diameter pole with 3 bolts with base cover single head mounting template	213.0 VA	277 V	0-10V dimming driver to 10%	22523	3000K	80	EXTERIOR	B3-U0-G3	COOPER	#GALN-SA-4C-830-U-T2R-[finish]-DIM-PR-MS/DIM-L20 + RSA-4-T-20-N-[finish]-2-1 with base cover	BEACON VIPER	GARDCO PUREFORM	TBD	Play area (path of egress)
ZN1-4H	20' Single head Parking pole	"Galeon" series, 17.5' pole with type 4FT optics with house side shield, size 16 light squares with 4 light squares, level 3 output, single head with integral occ sensor with dimming to 50% and photocell, include round straight aluminum pole, 4" diameter pole with 3 bolts with base cover single head mounting template, on 30" concrete base, custom cut pole to 17'-6"	213.0 VA	277 V	0-10V dimming driver to 10%	15914	3000K	80	EXTERIOR	B3-U0-G3	COOPER	#GALN-SA-4C-830-U-T4FT-HSS-[finish]-DIM-PR-MS/DIM-L20 + RSA-4-T-17.5-N-[finish]-2-1 with base cover	BEACON VIPER	GARDCO PUREFORM	TBD	Parking lot
ZN1-4	20' Single head Parking pole	"Galeon" series, 20' pole with type 4FT optics, size 16 light squares with 4 light squares, level 3 output, single head with integral occ sensor with dimming to 50% and photocell, include round straight aluminum pole, 4" diameter 20' pole with 3 bolts with base cover single head mounting template	213.0 VA	277 V	0-10V dimming driver to 10%	22052	3000K	80	EXTERIOR	B3-U0-G3	COOPER	#GALN-SA-4C-830-U-T4FT-[finish]-DIM-PR-MS/DIM-L20 + RSA-4-T-20-N-[finish]-2-1 with base cover	BEACON VIPER	GARDCO PUREFORM	TBD	Hardball courts
ZN1-4C	20' Single head Parking pole	"Galeon" series, 17.5' pole with type 4FT optics, size 16 light squares with 4 light squares, level 3 output, single head with integral occ sensor with dimming to 50% and photocell, include round straight aluminum pole, 4" diameter pole with 3 bolts with base cover single head mounting template, on 30" concrete base, custom cut pole to 17'-6"	213.0 VA	277 V	0-10V dimming driver to 10%	22052	3000K	80	EXTERIOR	B3-U0-G3	COOPER	#GALN-SA-4C-830-U-T4FT-[finish]-DIM-PR-MS/DIM-L20 + RSA-4-T-17.5-N-[finish]-2-1 with base cover	BEACON VIPER	GARDCO PUREFORM	TBD	Parking lot
ZN2	20' Double Head Parking pole	"Galeon" series, 17.5' pole with type 4FT optics for parking lot side and T2R optics on pedestrian side, size 16 light squares with 4 light squares, level 3 output, double head at 180 degrees with integral occ sensor with dimming to 50% and photocell, include round straight aluminum pole, 4" diameter pole with 3 bolts with base cover single head mounting template, on 30" concrete base, custom cut pole to 17'-6"	426.0 VA	277 V	0-10V dimming driver to 10%	=22523+22052	3000K	80	EXTERIOR	B3-U0-G3	COOPER	#GALN-SA-4C-830-U-T4FT and T2R head-[finish]-DIM-PR-MS/DIM-L20 + RSA-4-T-17.5-N-[finish]-2-2 with base cover	BEACON VIPER	GARDCO PUREFORM	TBD	Parking lot
ZN3-3	20' 3 Head Event Pole	"GFLD Galleon II Floodlight" series, 20' event pole with 3 adjustable heads, medium wide symmetrical round distribution, 800mA drive current, refer to detail sheet for diagram of aiming and for locations of heads on the pole, inlcude occ sensor and photocell, provide 3/4" conduit inside poles for future camera connections, to have GFCI Convenience Outlet (E)	132.0 VA	277 V	0-10V dimming driver to 10%	13317	3000K	90	EXTERIOR	B3-U0-G0	COOPER	#GFLD-SA1-C-930-4-MWR-[MOUNTING]-[FINISH]-DIM + RSA-4-T-20-N-[finish]-[mounting type]-3 with base cover-E	SELUX OLIVIO MEDIO	LITHONIA D-SERIES	TBD	Auditorum
ZN3-4	20' 4 Head Event Pole	"GFLD Galleon II Floodlight" series, 20' event pole with 4 adjustable heads, medium wide symmetrical round distribution, 800mA drive current, refer to detail sheet for diagram of aiming and for locations of heads on the pole, inlcude occ sensor and photocell, provide 3/4" conduit inside poles for future camera connections, to have GFCI Convenience Outlet (E)	176.0 VA	277 V	0-10V dimming driver to 10%	17756	3000K	90	EXTERIOR	B3-U0-G0	COOPER	#GFLD-SA1-C-930-4-MWR-[MOUNTING]-[FINISH]-DIM + RSA-4-T-20-N-[finish]-[mounting type]-4 with base cover-E	SELUX OLIVIO MEDIO	LITHONIA D-SERIES	TBD	Auditorum
ZN3-5	20' 5 Head Event Pole	"GFLD Galleon II Floodlight" series, 20' event pole with 5 adjustable heads, medium wide symmetrical round distribution, 800mA drive current, refer to detail sheet for diagram of aiming and for locations of heads on the pole, inlcude occ sensor and photocell, provide 3/4" conduit inside poles for future camera connections, to have GFCI Convenience Outlet (E)	220.0 VA	277 V	0-10V dimming driver to 10%	22195	3000K	90	EXTERIOR	B3-U0-G0	COOPER	#GFLD-SA1-C-930-4-MWR-[MOUNTING]-[FINISH]-DIM + RSA-4-T-20-N-[finish]-[mounting type]-5 with base cover-E	SELUX OLIVIO MEDIO	LITHONIA D-SERIES	TBD	Auditorum

Include nighttime aiming to confirm aiming per diagrams

1

NOTES

1. REFER TO STRUCTURAL DRAWINGS.
2. BOND EQUIPMENT GROUND TO POLE.
3. BRANCH CIRCUIT CONDUIT PER SITE PLAN.
4. PROVIDE MINIMUM COVER OF 24" FROM FINISH GRADE.
5. POLE ANCHOR BOLTS PER MANUFACTURER SPEC'S.. (PROVIDE EXTENDED BOLTS FOR THRU CONCRETE PAD)

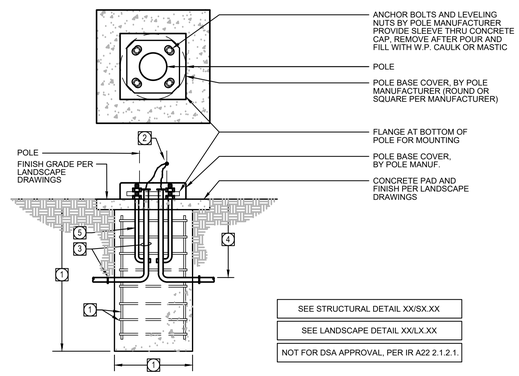

POLE WITH CONCRETE PAD N.T.S. 02

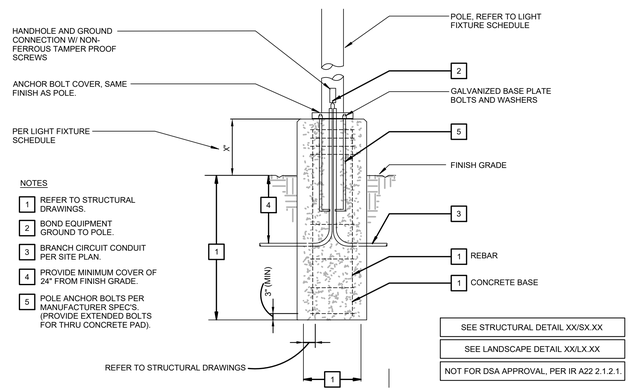

NOTES

1. REFER TO STRUCTURAL DRAWINGS.
2. BOND EQUIPMENT GROUND TO POLE.
3. BRANCH CIRCUIT CONDUIT PER SITE PLAN.
4. PROVIDE MINIMUM COVER OF 24" FROM FINISH GRADE.
5. POLE ANCHOR BOLTS PER MANUFACTURER SPEC'S. (PROVIDE EXTENDED BOLTS FOR THRU CONCRETE PAD).

POLE WITH RAISED BASE N.T.S. 01

LPA
ARCHITECTURE ENGINEERING INTERIOR DESIGN
LANDSCAPE ARCHITECTURE PLANNING
949-261-1001 Office
LPADesignStudios.com
5301 California Avenue, Suite 100
Irvine, California 92617

LICENSED ARCHITECT NICOLE MENTZ C30830 9/30/2027 RENEWAL DATE STATE OF CALIFORNIA

THE JOBSON FAMILY FOUNDATION

CONCEPT DESIGN:
Landscape Architect
Helle Nebelong
Denmark
hellenebelong.com

This document and all other project documents, ideas, aesthetics and designs incorporated therein are instruments of service. All project documents are copyright protected, are the property of LPA, Inc. (LPA) and cannot be lawfully used in whole or in part for any project or purpose except as set forth in the contractual agreement between LPA and its Client. The unauthorized disclosure and/or use of the project documents (including the creation of derivative works), may give rise to liability for copyright infringement, unlawful disclosure, use or misappropriation of property rights held by LPA. The unauthorized use of the project documents will give rise to the recovery of monetary losses and damages including attorney fees and costs for which the unauthorized user will be held liable.
Project documents describe the design intent of the work and are not a representation of as-built or existing conditions. LPA is not responsible for any discrepancies between the project documents and the existing conditions.

© LPA, Inc.

ALTADENA ARTS MAGNET SCHOOL

743 E CALAVERAS ST.
ALTADENA, CA 91001

Developed for
PASADENA UNIFIED SCHOOL DISTRICT

Revision	Date
Addendum 1	04/28/2026

Submittal	Date
100% SCHEMATIC DESIGN	12/05/2025
DSA SUBMITTAL	02/02/2026
DSA SUBMITTAL V2	03/13/2026

Job Number	33366
Checked By	AG /SC
Scale	N.A.

SITE LIGHTING FIXTURE SCHEDULE & DETAILS

E0.30

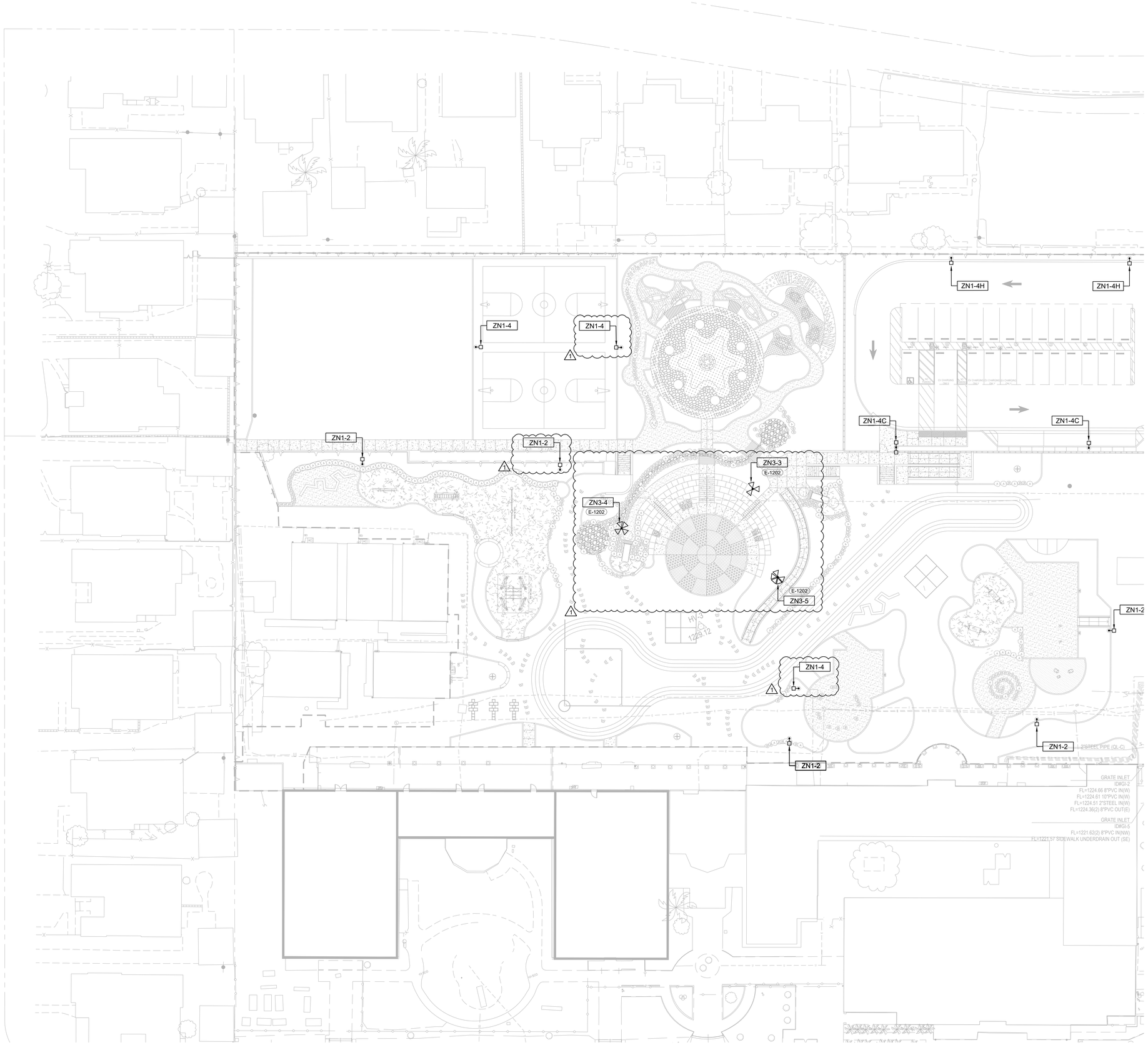

LIGHTING SITE PLAN 1" = 20' 01

GENERAL NOTES

1. REFER TO LANDSCAPE DRAWINGS FOR EXACT LOCATIONS OF SITE LIGHTING FIXTURES.
2. NOTIFY ARCHITECT AND ENGINEER OF RECORD OF ANY DISCREPANCIES (INCLUDING BUT NOT LIMITED TO FIXTURE LOCATIONS, FIXTURE TYPES, AND MOUNTING CONDITIONS), PRIOR TO FINALIZING FIXTURE ORDER WITH DISTRIBUTOR AND INSTALLING FIXTURE.
3. THE ORIENTATION OF MULT-HEAD EVENT POLE HEADS SHOWN ON PLAN REPRESENT GENERAL POSITIONING/ORIENTATION OF POLES. ONCE THE FIXTURES HAVE BEEN INSTALLED, CONTRACTOR IS TO AIM FIXTURE PER AIMING VECTORS SHOWN ON 07/E9.14.
4. IN ADDITION TO ORIENTING AND AIMING FIXTURES AS SOWN ON PLAN, CONTRACTOR IS TO SCHEDULE AIMING SESSION(S) WITH LIGHTING DESIGNER TO FINALIZE AIMING; REFER TO GENERAL NOTE #19 ON SHEET E0.20 FOR MORE INFORMATION.
5. IN ADDITION TO THE CHARTS AND DIAGRAMS ON THIS SHEET, REFER TO SITE LIGHTING PLAN E1.11, PHOTOMETRIC PLAN E9.12, AND LIGHTING FIXTURE SCHEDULE E0.20 FOR ADDITIONAL INFORMATION ON EVENT POLES, SPECIFICATIONS, AND LOW-VOLTAGE HARDWARE LOCATIONS.
6. PHOTOMETRIC ANALYSIS SHOWN REPRESENTS ILLUMINANCE VALUES, IN FOOT-CANDLES. UNDER NORMAL POWER FOR AREAS THAT ARE REQUIRED TO HAVE EGRESS LIGHTING PER THE CBC.
7. PER THE CBC, EGRESS ILLUMINATION TO AND INCLUDING THE SAFE DISPERSAL AREA(S) SHALL NOT BE LESS THAN 1FC AT ANY POINT, MEASURED ALONG THE PATH OF EGRESS.
8. PER SECTION 5.106.8 OF THE CALIFORNIA GREEN BUILDING CODE, LUMINAIRES WITH LUMEN OUTPUTS OF LESS THAN 6200LM ARE NOT REQUIRED TO COMPLY WITH ALLOWABLE MAXIMUM BUG RATINGS AS SHOWN IN TABLE 5.106.8.

KEYNOTES

E-1202 EVENT POLES TO HAVE GFCI CONVENIENCE OUTLET LOCATED 4' ABOVE BASE AND ON THE SAME SIDE OF POLE AS HAND HOLE.

LPA

ARCHITECTURE ENGINEERING INTERIOR DESIGN
LANDSCAPE ARCHITECTURE PLANNING

949-261-1001 Office

LPADesignStudios.com

5301 California Avenue, Suite 100
Irvine, California 92617

LICENSED ARCHITECT
NICOLE MEYER
C30830
9/30/2027
RENEWAL DATE
STATE OF CALIFORNIA

THE JOBSON FAMILY FOUNDATION

CONCEPT DESIGN:
Landscape Architect
Helle Nebelong
Denmark
hellenebelong.com

This document and all other project documents, ideas, aesthetics and designs incorporated therein are instruments of service. All project documents are copyright protected, are the property of LPA, Inc. (LPA) and cannot be lawfully used in whole or in part for any project or purpose except as set forth in the contractual agreement between LPA and its Client. The unauthorized disclosure and/or use of the project documents (including the creation of derivative works), may give rise to liability for copyright infringement, unlawful disclosure, use or misappropriation of property rights held by LPA. The unauthorized use of the project documents will give rise to the recovery of monetary losses and damages including attorney fees and costs for which the unauthorized user will be held liable.
Project documents describe the design intent of the work and are not a representation of as-built or existing conditions. LPA is not responsible for any discrepancies between the project documents and the existing conditions.

© LPA, Inc.

ALTADENA ARTS MAGNET SCHOOL

743 E CALAVERAS ST.
ALTADENA, CA 91001

Developed for
PASADENA UNIFIED SCHOOL DISTRICT

Revision	Date
Addendum 1	04/28/2026

Submittal	Date
100% SCHEMATIC DESIGN	12/05/2025
DSA SUBMITTAL	02/02/2026
DSA SUBMITTAL V2	03/13/2026

Job Number	33366
Checked By	AG /SC
Scale	1" = 20'

LIGHTING SITE PLAN

E1.11

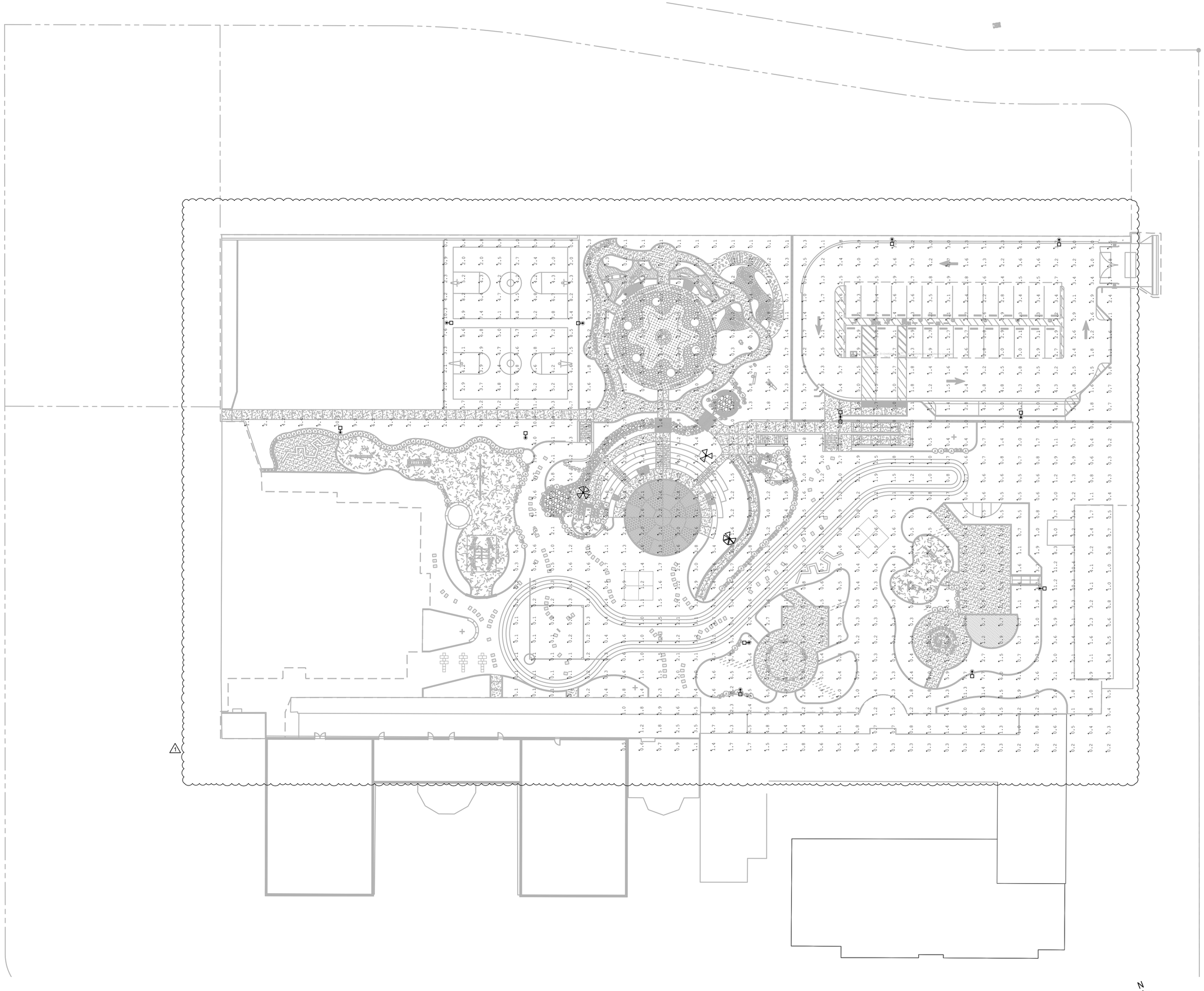

N

0 10 20 40

LIGHTING PHOTOMETRIC SITE PLAN 1" = 20' 01

LPA

ARCHITECTURE ENGINEERING INTERIOR DESIGN
LANDSCAPE ARCHITECTURE PLANNING

949-261-1001 Office

LPADesignStudios.com

5301 California Avenue, Suite 100
Irvine, California 92617

LICENSED ARCHITECT
NICOLE MEYER
C30830
9/30/2027
RENEWAL DATE
STATE OF CALIFORNIA

THE JOBSON FAMILY FOUNDATION

CONCEPT DESIGN:

Landscape Architect
Helle Nebelong
Denmark
hellenebelong.com

This document and all other project documents, ideas, aesthetics and designs incorporated therein are instruments of service. All project documents are copyright protected, are the property of LPA, Inc. (LPA) and cannot be lawfully used in whole or in part for any project or purpose except as set forth in the contractual agreement between LPA and its Client. The unauthorized disclosure and/or use of the project documents (including the creation of derivative works), may give rise to liability for copyright infringement, unlawful disclosure, use or misappropriation of property rights held by LPA. The unauthorized use of the project documents will give rise to the recovery of monetary losses and damages including attorney fees and costs for which the unauthorized user will be held liable.
Project documents describe the design intent of the work and are not a representation of as-built or existing conditions. LPA is not responsible for any discrepancies between the project documents and the existing conditions.

© LPA, Inc.

ALTADENA ARTS MAGNET SCHOOL

743 E CALAVERAS ST.
ALTADENA, CA 91001

Developed for
PASADENA UNIFIED SCHOOL DISTRICT

Revision	Date
Addendum 1	04/28/2026

Submittal	Date
100% SCHEMATIC DESIGN	12/05/2025
DSA SUBMITTAL	02/02/2026
DSA SUBMITTAL V2	02/13/2026

Job Number	33366
Checked By	AG /SC
Scale	1" = 20'

LIGHTING
PHOTOMETRIC SITE
PLAN

E6.01

GENERAL NOTES

1. REFER TO LANDSCAPE DRAWINGS FOR EXACT LOCATIONS OF SITE LIGHTING FIXTURES.
2. NOTIFY ARCHITECT AND ENGINEER OF RECORD OF ANY DISCREPANCIES (INCLUDING BUT NOT LIMITED TO FIXTURE LOCATIONS, FIXTURE TYPES, AND MOUNTING CONDITIONS), PRIOR TO FINALIZING FIXTURE ORDER WITH DISTRIBUTOR AND INSTALLING FIXTURE.
3. THE ORIENTATION OF MULT-HEAD EVENT POLE HEADS SHOWN ON PLAN REPRESENT GENERAL POSITIONING/ORIENTATION OF POLES. ONCE THE FIXTURES HAVE BEEN INSTALLED, CONTRACTOR IS TO AIM FIXTURE PER AIMING VECTORS SHOWN ON 07/E9.14.
4. IN ADDITION TO ORIENTING AND AIMING FIXTURES AS SOWN ON PLAN, CONTRACTOR IS TO SCHEDULE AIMING SESSION(S) WITH LIGHTING DESIGNER TO FINALIZE AIMING; REFER TO GENERAL NOTE #19 ON SHEET E0.20 FOR MORE INFORMATION.
5. IN ADDITION TO THE CHARTS AND DIAGRAMS ON THIS SHEET, REFER TO SITE LIGHTING PLAN E1.11, PHOTOMETRIC PLAN E9.12, AND LIGHTING FIXTURE SCHEDULE E0.20 FOR ADDITIONAL INFORMATION ON EVENT POLES, SPECIFICATIONS, AND LOW-VOLTAGE HARDWARE LOCATIONS.
6. PHOTOMETRIC ANALYSIS SHOWN REPRESENTS ILLUMINANCE VALUES, IN FOOT-CANDLES. UNDER NORMAL POWER FOR AREAS THAT ARE REQUIRED TO HAVE EGRESS LIGHTING PER THE CBC.
7. PER THE CBC, EGRESS ILLUMINATION TO AND INCLUDING THE SAFE DISPERSAL AREA(S) SHALL NOT BE LESS THAN 1FC AT ANY POINT, MEASURED ALONG THE PATH OF EGRESS.
8. PER SECTION 5.106.8 OF THE CALIFORNIA GREEN BUILDING CODE, LUMINAIRES WITH LUMEN OUTPUTS OF LESS THAN 6200LM ARE NOT REQUIRED TO COMPLY WITH ALLOWABLE MAXIMUM BUG RATINGS AS SHOWN IN TABLE 5.106.8.

KEYNOTES

E-1201 AIMING DIAGRAM IS INTENDED TO SHOW DESIGN INTENT FOR EVENT POLE LIGHTS.

EVENT POLE FIXTURE HEADS TO BE PRE-AIMED DURING THE DAY WITH A LASER POINTER. CENTER OF BEAM TO BE FOCUSED ON X. FINAL AIMING TO BE SCHEDULED WITH LIGHTING DESIGNER AT NIGHT PER CONTRACT DOCUMENTS.

EVENT POLE MOUNTING CONFIGURATIONS

FIXTURE TYPE	HEAD	ANGULAR LOCATION	CLOCKWISE FROM HAND HOLE	FIXTURE HEAD MOUNTING HEIGHT
ZN3-3	HEAD 1	G	90"	20'
	HEAD 2	M	180"	18'
	HEAD 3	S	270"	19'
ZN3-4	HEAD 1	D	45"	19'
	HEAD 2	M	180"	18'
	HEAD 3	R	255"	20'
	HEAD 4	V	315"	18'
ZN3-5	HEAD 1	C	30"	19'
	HEAD 2	G	90"	18'
	HEAD 3	L	165"	18'
	HEAD 4	Q	240"	17'
	HEAD 5	U	300"	20'

LEGEND

HAND HOLE
(CONTRACTOR TO POSITION POLE SUCH THAT HAND HOLE IS ORIENTED TOWARD DIRECTION OF "HH" SYMBOL ON PLAN.)

EVENT/LIGHTING FIXTURE HEAD

HAND HOLE

ANGULAR LOCATION OF ARMS FROM HAND HOLE AT 0° PROCEEDING AROUND POLE CLOCKWISE.

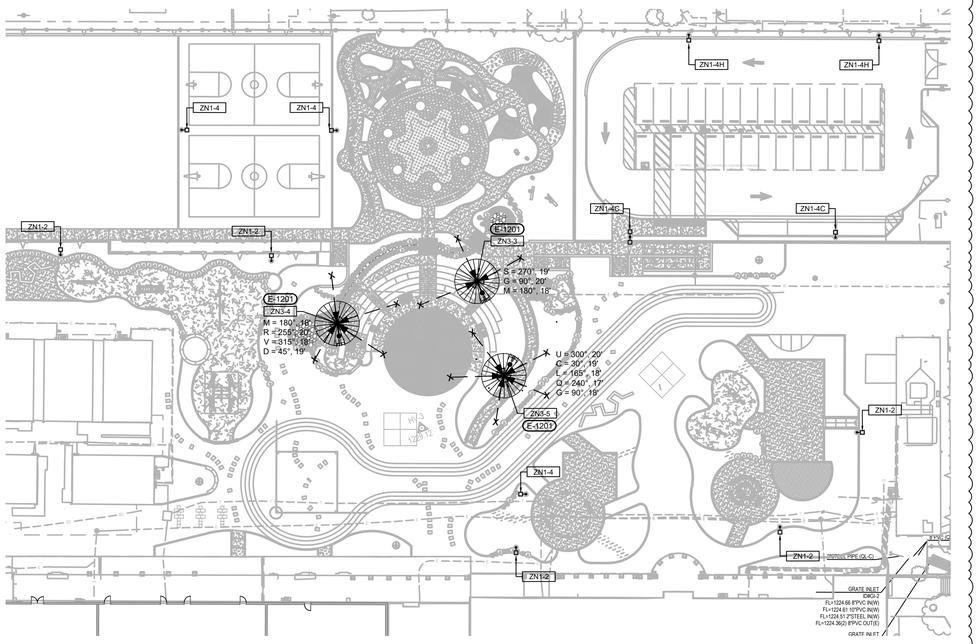

EVENT POLE MOUNTING CONFIGURATIONS | 1" = 30' | 07

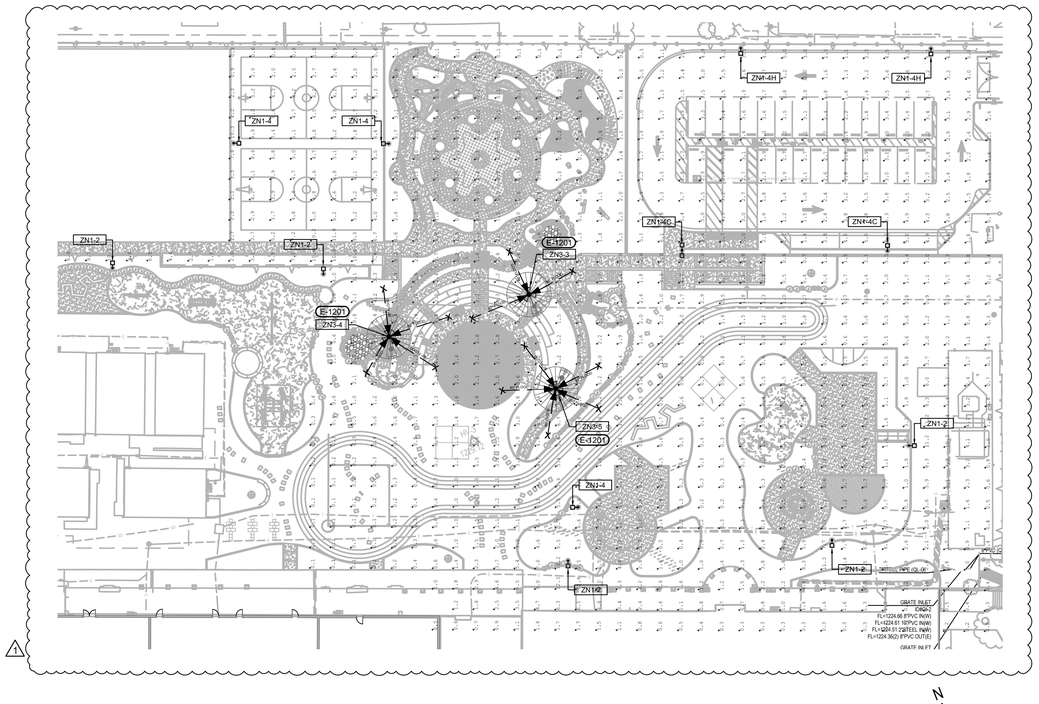

LIGHTING SITE AIMING DIAGRAM | 1" = 30' | 05

LPA
ARCHITECTURE ENGINEERING INTERIOR DESIGN
LANDSCAPE ARCHITECTURE PLANNING
949-261-1001 Office
LPADesignStudios.com
5301 California Avenue, Suite 100
Irvine, California 92617

LICENSED ARCHITECT NICOLE MEITZ C30830 9/30/2027 RENEWAL DATE STATE OF CALIFORNIA

THE JOBSON FAMILY FOUNDATION

CONCEPT DESIGN:
Landscape Architect
Helle Nebelong
Denmark
hellenebelong.com

This document and all other project documents, ideas, aesthetics and designs incorporated therein are instruments of service. All project documents are copyright protected, are the property of LPA, Inc. (LPA) and cannot be lawfully used in whole or in part for any project or purpose except as set forth in the contractual agreement between LPA and its Client. The unauthorized disclosure and/or use of the project documents (including the creation of derivative works), may give rise to liability for copyright infringement, unlawful disclosure, use or misappropriation of property rights held by LPA. The unauthorized use of the project documents will give rise to the recovery of monetary losses and damages including attorney fees and costs for which the unauthorized user will be held liable.
Project documents describe the design intent of the work and are not a representation of as-built or existing conditions. LPA is not responsible for any discrepancies between the project documents and the existing conditions.

© LPA, Inc.

ALTADENA ARTS MAGNET SCHOOL

743 E CALAVERAS ST.
ALTADENA, CA 91001

Developed for
PASADENA UNIFIED SCHOOL DISTRICT

Revision	Date
Addendum 1	04/28/2026

Submittal	Date
100% SCHEMATIC DESIGN	12/05/2025
DSA SUBMITTAL	02/02/2026
DSA SUBMITTAL 1/2	03/13/2026

Job Number	33366
Checked By	AG /SC
Scale	1" = 20'

LIGHTING SITE
AIMING DIAGRAM AND
CONFIGURATION

E9.14

VIEW KEY

NAME — LEVEL NAME
10'-0" — HEIGHT ABOVE PROJECT 0'-0"

1 — KEYNOTE: INDICATES NOTE USED TO DESCRIBE ADDITIONAL INFORMATION ABOUT WORK REQUIRED, SPECIFIC TO THE SHEET AND/OR DETAIL

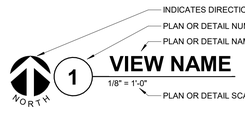

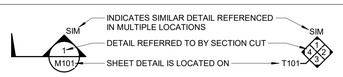

LINE TYPE AND TAG KEY:

NEW WORK BY THIS CONTRACTOR (WIDE LINE)
- NEW
- EXISTING TO BE REMOVED (SHORT DASHED PATTERN)
- NEW UNDERFLOOR OR UNDERGROUND (LONG DASHED PATTERN)

EXISTING TO REMAIN OR WORK BY OTHERS (NARROW LINE)
- EXISTING
- EXISTING TO BE REMOVED BY OTHERS (SHORT DASHED PATTERN)
- EXISTING UNDERFLOOR OR UNDERGROUND (LONG DASHED PATTERN)

HALFTONING DOES NOT MODIFY SCOPE.

'TAG'-E — TAGS WITH DASH 'E' INDICATES THE REFERENCED OBJECT IS EXISTING

TAG-1 — UNDERLINED TAG INDICATES OBJECT IS IN-SCOPE. IF NEW, ADDITIONAL INFORMATION IS AVAILABLE IN A SCHEDULE, MATERIAL LIST, OR SYMBOL LIST

INDICATES AN EXISTING SYSTEM'S POINT OF CONNECTION/REMOVAL

APPLICABLE CODES

CONTRACTOR SHALL COMPLY WITH APPLICABLE CODES AND LOCAL AMENDMENTS INCLUDING, BUT NOT LIMITED TO, THE FOLLOWING:

BUILDING CODE:	CBC 2025 EDITION
FIRE CODE:	IFC 2025 EDITION
PLUMBING CODE:	CPC 2025 EDITION
MECHANICAL CODE:	CMC 2025 EDITION
ELECTRICAL CODE:	NFPA 70 (NEC) 2025 EDITION
LIFE SAFETY CODE:	NFPA 101 2022 EDITION
ENERGY CONSERVATION CODE:	IECC 2022 EDITION
HEALTH DEPARTMENT CODE:	CURRENT EDITION
LOCAL BUILDING CODE:	CURRENT EDITION

CONTRACTOR ABBREVIATION KEY

ABBR:	DESCRIPTION:
A.C.	ASBESTOS ABATEMENT CONTRACTOR
A.V.C.	AUDIO/VISUAL CONTRACTOR
C.C.	CIVIL CONTRACTOR
C.M.	CONSTRUCTION MANAGER
E.C.	ELECTRICAL CONTRACTOR
F.P.C.	FIRE PROTECTION CONTRACTOR
F.S.C.	FOOD SERVICE CONTRACTOR
G.C.	GENERAL CONTRACTOR
H.C.	HEATING CONTRACTOR
M.C.	MECHANICAL CONTRACTOR
N.C.C.	NURSE CALL CONTRACTOR
P.C.	PLUMBING CONTRACTOR
S.C.	SECURITY CONTRACTOR
T.C.	TECHNOLOGY CONTRACTOR
T.C.C.	TEMPERATURE CONTROLS CONTRACTOR
V.C.	VENTILATION CONTRACTOR

CONTACT PERSONS:

DESCRIPTION:	PERSON:
PROJECT MANAGER	KRISTINA NAKAMOTO
ELECTRICAL	MOHAMMAD G. ASSAF
TECHNOLOGY AV	RYAN BETSWORTH

TECHNOLOGY SYMBOL LIST

SYMBOL	TAG	EQUIPMENT LIST ABBREVIATION	DESCRIPTION
R1		AC-R1-W	SECURITY CREDENTIAL READER (WALL) TYPE 1
AMP		AV-AMP-1	AV AMPLIFIER (WALL)
		AV-AMP-3	AV AMPLIFIER (WALL)
A	AN1	AV-AN1-W	AV ANTENNA (WALL)
	AN2	AV-AN2-W	AV ANTENNA (WALL)
M	MP5	AV-MIC-5	AV MICROPHONE (WALL)
	MP6	AV-MIC-6	AV MICROPHONE (WALL)
	MP1	AV-MP1-W	AV MICROPHONE (WALL)
	MP2	AV-MP2-R	AV MICROPHONE (WALL)
	MP3	AV-MP3-C	AV MICROPHONE (WALL)
S	SP1	AV-SP1-C	AV PERFORMANCE SPEAKER (CEILING)
S	SP1	AV-SP1-W	AV PERFORMANCE SPEAKER (WALL)
	SP2	AV-SP2-W	AV PERFORMANCE SPEAKER (WALL)
	SP3	AV-SP3-P	AV PERFORMANCE SPEAKER (WALL)
	SP4	AV-SP4-W	AV PERFORMANCE SPEAKER (WALL)
T	TP2	AV-TP2-W	AV TOUCH PANEL (WALL)
	WP5	AV-WP5-W	AV WALLPLATE/BACKBOX (WALL)
		AV-CM-1-W	CAM-1 SINGLE LENS CAMERA_WALL
C#	C1-WAP	SC-WAP-W	INFORMATION OUTLET (WALL)
RI	RI	SC-RI-W	INFORMATION OUTLET ROUGH-IN (WALL)

PATHWAY SYMBOL LIST:

SYMBOL	DESCRIPTION
DIAMETER ø C	CONDUIT
	CONDUIT DOWN
	CONDUIT UP OR UP/DOWN
	CONDUIT SLEEVE
	CONTINUATION

TECHNOLOGY SYMBOL LIST GENERAL NOTES:

1. UNDERLINED SUBSCRIPTS NEXT TO SYMBOL INDICATES DEVICE TYPE. REFER TO TECHNOLOGY EQUIPMENT SCHEDULE T500 FOR ADDITIONAL INFORMATION.

TECHNOLOGY ABBREVIATION KEY

ABBR:	DESCRIPTION:
AFF	ABOVE FINISHED FLOOR
AFG	ABOVE FINISHED GRADE
BFC	BELOW FINISHED CEILING
C	CONDUIT
DE	DELAYED EGRESS
DPDT	DOUBLE POLE DOUBLE THROW
FOV	FIELD OF VIEW
J-BOX	JUNCTION BOX
POE	POWER OVER ETHERNET
PTZ	PAN TILT ZOOM
SIM	SIMILAR
TYP	TYPICAL
UON	UNLESS OTHERWISE NOTED
+#	MOUNTING HEIGHT ABOVE FINISHED FLOOR
EF-#	ENTRANCE FACILITY
MC-#	MAIN CROSS-CONNECT
TR-#	TELECOMMUNICATIONS ROOM

SUGGESTED MATRIX OF RESPONSIBILITY

ITEM:	SHOWN ON:	FURNISHED BY:	INSTALLED BY:	NOTES:
TECHNOLOGY ROUGH-IN. REFER TO TECHNOLOGY EQUIPMENT SCHEDULE AND SPECIFICATIONS FOR DEFINITION	T-SERIES	E.C.	E.C.	3. 4.
INFORMATION OUTLET FACEPLATES, JACKS, AND TERMINATIONS	T-SERIES	T.C.	T.C.	
TELECOMMUNICATION SYSTEMS ROUGH-IN	T-SERIES	E.C. [T.C]	E.C.	1.
TELECOMMUNICATION EQUIPMENT, CABLING, AND TERMINATIONS	T-SERIES	T.C.	T.C.	
GROUNDING LUGS ON TECHNOLOGY EQUIPMENT	T-SERIES	T.C.	E.C.	6.
BONDING SYSTEM FOR TECHNOLOGY SYSTEM, REFER TO SPECIFICATION SECTION 27 05 26 FOR DEFINITION	T-SERIES	E.C.	E.C.	7. 8.
CONNECTION OF TECHNOLOGY BONDING SYSTEM TO THE ELECTRICAL GROUND SYSTEM	T-SERIES	E.C.	E.C.	
LINE VOLTAGE POWER (+120V OR GREATER)	E-SERIES	E.C.	E.C.	
LINE VOLTAGE POWER (NOT SHOWN BUT REQUIRED FOR PROPER INSTALLATION OF SYSTEM)	N/A	T.C.	E.C.	2. 4.
LOW VOLTAGE CABLING FOR TECHNOLOGY SYSTEMS	T-SERIES	T.C.	T.C.	
CABLE HANGERS AND SUPPORTS OR OTHER CABLE ROUTING METHODS (OTHER THAN CONDUIT AND CABLE TRAY)	T-SERIES	T.C.	T.C.	5.
TECHNOLOGY SERVICE ENTRANCE CONDUITS, HANDHOLES, AND MANHOLES	[E]T-SERIES	E.C.	E.C.	

SUGGESTED MATRIX OF RESPONSIBILITY NOTES

Key Name	SUGGESTED MATRIX NOTES
1.	LOCATIONS OF TELECOMMUNICATIONS ROUGH-INS SHALL BE INDICATED BY THE INFORMATION OUTLET SYMBOLS ON THE DRAWINGS. REFER TO THE TECHNOLOGY SYMBOL LIST FOR ADDITIONAL INFORMATION.
2.	BASED ON THE INHERENT DIFFERENCES IN PRODUCTS FROM VARIOUS MANUFACTURERS, ALL REQUIRED EQUIPMENT MAY NOT BE SHOWN ON THE DRAWINGS FOR ALL ACCEPTABLE MANUFACTURERS.
3.	INCLUDES BACKBOXES AND CONDUIT REQUIRED FOR THE TECHNOLOGY SYSTEMS INSTALLATION. THE E.C. SHALL BASE THE BID ON THE BASIS OF DESIGN SHOWN ON THE CONTRACT DOCUMENTS.
4.	ALL CHANGES TO THE SLEEVES, BACKBOXES, CONDUITS, AND POWER REQUIRED BECAUSE OF THE T.C.'S SELECTION OF AN ALTERNATE ACCEPTABLE MANUFACTURER OR FROM SYSTEM CONFIGURATIONS THAT ARE LEFT TO THE CHOICE OF THE CONTRACTOR SHALL BE INCLUDED IN THE T.C.'S BID. THIS BID SHALL INCLUDE INSTALLATION BY A LICENSED ELECTRICIAN.
5.	UNLESS TRADE RULES DICTATE OTHERWISE.
6.	FURNISHED AS PART OF THE EQUIPMENT WHEN POSSIBLE, OR FURNISHED TO THE E.C. FOR INSTALLATION IN THE FIELD.
7.	INCLUDES ALL CONDUCTORS, GROUND BARS, AND TERMINATIONS FOR THE COMPLETE BONDING SYSTEM REQUIRED BY THE SPECIFICATIONS.
8.	REFER TO ELECTRICAL DRAWINGS FOR LOCATIONS OF PANELS AND SWITCHBOARDS SHOWN IN THE TECHNOLOGY BONDING RISER DIAGRAM AND TYPICAL TELECOM ROOM BONDING FLOW DIAGRAM.

AV FUNCTIONAL DIAGRAM KEY

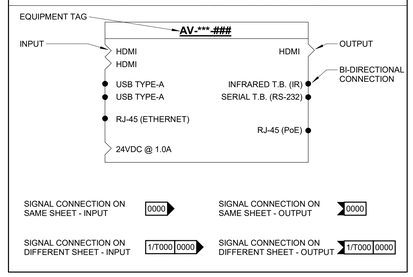

TECHNOLOGY GENERAL NOTES:

1. ##-###-# INDICATES TECHNOLOGY EQUIPMENT SCHEDULE ITEM LABELED AS "EQUIPMENT LIST ABBREVIATION"
2. REFER TO TECHNOLOGY EQUIPMENT SCHEDULE AND SPECIFICATIONS FOR FULL DESCRIPTIONS AND MANUFACTURERS OF ALL DEVICES.

TECHNOLOGY MOUNTING SUBSCRIPT KEY:
- A MOUNT AT +6" TO CENTERLINE ABOVE COUNTER OR BACKSPLASH
- H MOUNT ORIENTED HORIZONTALLY
- L MOUNT IN CASEWORK
- M MOUNT IN MODULAR FURNITURE
- S MOUNT IN SURFACE RACEWAY

A SLASH IS USED BETWEEN TWO SUBSCRIPTS, E.G., A/H.

3. REFER TO THE TECHNOLOGY EQUIPMENT SCHEDULE FOR MORE COMPLETE DESCRIPTION AND ITEMS.

TECHNOLOGY INSTALLATION NOTES:

1. THE COMPLETE INSTALLATION SHALL BE IN ACCORDANCE WITH THE ADA STANDARDS FOR ACCESSIBLE DESIGN. REFER TO THE ADA GUIDELINES FOR ALL CONFIGURATION DETAILS ON THIS PAGE FOR ADDITIONAL INFORMATION.
2. CONCEAL ALL CONDUIT IN WALLS, PARTITIONS, ABOVE CEILING, IN FLOOR SLAB, ETC. UNLESS OTHERWISE INDICATED ON THE PLANS OR IN THE SPECIFICATIONS. CONDUIT IN MECHANICAL ROOMS AND STORAGE ROOMS WITHOUT CEILINGS MAY BE EXPOSED ON BUILDING STRUCTURE.
3. THE CONTRACTOR IS RESPONSIBLE FOR REMOVAL AND REPLACEMENT OF THE CEILINGS, CEILING TILES, AND CEILING GRID ASSOCIATED WITH THE AREAS OF WORK BY ALL CONTRACTORS.
4. EACH CONTRACTOR IS RESPONSIBLE FOR DAMAGE CAUSED BY THEIR ACTIONS TO THE WALLS, FLOORS, CEILINGS, AND ROOFS. THE CONTRACTOR WHOSE WORK CAUSES DAMAGE IS RESPONSIBLE FOR PATCHING TO MATCH ORIGINAL CONSTRUCTION, FIRE RATING, AND FINISH.

TECHNOLOGY OUTSIDE PLANT NOTES

1. THE LOCATION OF THE CONDUIT, HAND HOLES AND/OR MAINTENANCE HOLES SHOWN ARE APPROXIMATE LOCATIONS. FIELD VERIFY THE LOCATION OF ALL UTILITIES PRIVATE AND/OR PUBLIC PRIOR TO THE INSTALLATION OF THE COMPONENT. FIELD COORDINATE THE FINAL LOCATION WITH THE OWNER AND ENGINEER PRIOR TO INSTALLATION.
2. POTHOLING TO LOCATE EXISTING UNDERGROUND UTILITIES, IF APPLICABLE, SHALL BE INCLUDED IN THE CONTRACTOR'S BID. CONTRACTOR IS RESPONSIBLE FOR FINAL PLACEMENT OF HAND HOLES AND/OR MAINTENANCE HOLES AND SHALL NOTIFY THE ENGINEER OF FINAL LOCATIONS PRIOR TO INSTALLATION.
3. HAND HOLES AND/OR MAINTENANCE HOLES SHALL BE CONSTRUCTED SO THAT THE TOP OF THE FRAME WILL BE FLUSH WITH THE GROUND LINE.
4. REMOVAL AND REPLACEMENT OF THE EXISTING UNDERGROUND UTILITIES THAT ARE REQUIRED TO COMPLETE THE INSTALLATION SHALL BE INCLUDED IN THE CONTRACTOR'S BID.
5. CONTRACTOR SHALL INCLUDE IN THEIR BID ANY REMOVAL AND REPLACEMENT OF EXISTING SIDEWALK, PAVEMENT, GRASS, SHRUBS, TREES, ETC. THAT WILL BE IMPACTED BY THE INSTALLATION OF THE NEW CONDUITS SHOWN ON THE DRAWINGS. IF TREES ARE REQUIRED TO BE REMOVED THE CONTRACTOR SHALL CONTACT THE OWNER AND DISCUSS OPTIONS PRIOR TO CUTTING DOWN ANY TREE OR SHRUB OVER 5" IN HEIGHT.
6. NO ADDITIONAL COST SHALL BE APPROVED FOR PLACING CONDUITS DEEPER THAN REQUIRED MINIMUM DEPTH.
7. PROVIDE A MINIMUM OF 25'-0" SLACK LOOP WITHIN EACH HAND HOLES AND/OR MAINTENANCE HOLES. SLACK LOOP SHALL BE SECURE SO COPPER IS NOT RESTING ON EARTH AFTER FINAL INSTALLATION.

TECHNOLOGY SHEET INDEX

T000	TECHNOLOGY COVERSHEET
T200	SITE PLAN - TECHNOLOGY
T400	TECHNOLOGY DETAILS AND DIAGRAMS
T500	TECHNOLOGY SCHEDULES
GRAND TOTAL: 4	

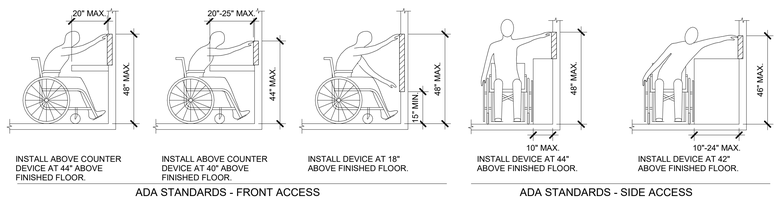

ADA STANDARDS FOR ACCESSIBLE DESIGN

IDENTIFICATION STAMP
DIV. OF THE STATE ARCHITECT
APP: 03-125900 INC:
REVIEWED FOR
SS ☑ FLS ☑ ACS ☑
DATE: 03/18/2026

LPA
ARCHITECTURE ENGINEERING INTERIOR DESIGN LANDSCAPE ARCHITECTURE PLANNING
949-261-1001 Office
LPADesignStudios.com
5301 California Avenue, Suite 100
Irvine, California 92617

REGISTERED PROFESSIONAL ENGINEER
NESTOR C. IGNACIO JR.
Lic. E16934
Exp. 6-30-2027
ELECTRICAL
STATE OF CALIFORNIA

IMEG
www.imegcorp.com
300 NORTH LAKE AVENUE
12TH FLOOR
PASADENA, CA 91101
P: 626.463.2800 F: 626.463.2801
PROJECT #25007252.00

This document and all other project documents, ideas, aesthetics and designs incorporated therein are instruments of service. All project documents are copyright protected, are the property of LPA, Inc. (LPA) and cannot be lawfully used in whole or in part for any project or purpose except as set forth in the contractual agreement between LPA and its Client. The unauthorized disclosure and/or use of the project documents (including the creation of derivative works), may give rise to liability for copyright infringement, unlawful disclosure, use or misappropriation of property rights held by LPA. The unauthorized use of the project documents will give rise to the recovery of monetary losses and damages including attorney fees and costs for which the unauthorized user will be held liable.
Project documents describe the design intent of the work and are not a representation of as-built or existing conditions. LPA is not responsible for any discrepancies between the project documents and the existing conditions.

© LPA, Inc.

ALTADENA ELEMENTARY SCHOOL

743 E Calaveras St,
Altadena, CA 91001

Developed for
ALTADENA ELEMENTARY SCHOOL

Revision	Date

Submittal	Date
DSA SUBMITTAL	02/02/2026

Job Number	33366
Checked By	Checker
Scale	As indicated

T000

TECHNOLOGY COVERSHEET

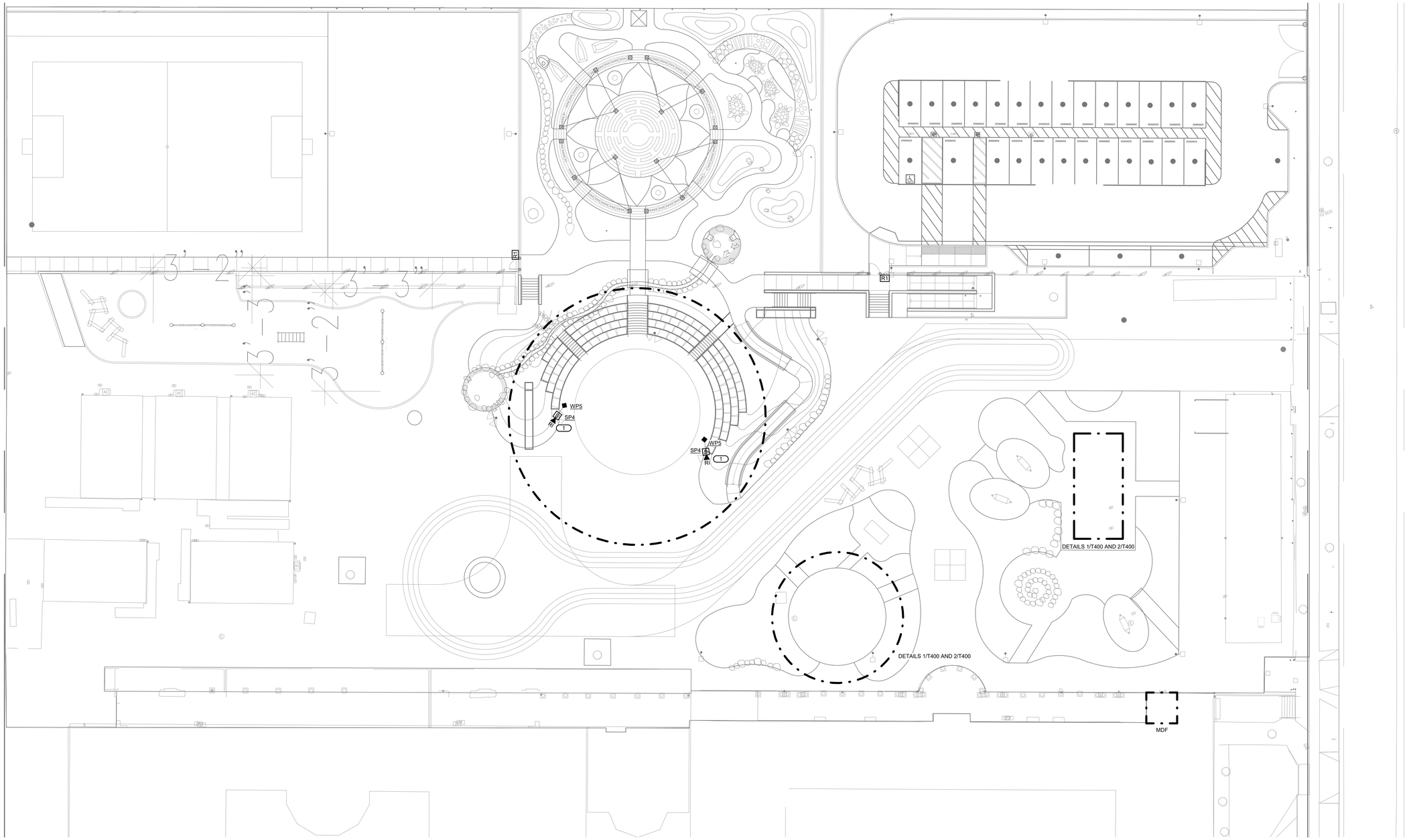

1 SITE PLAN - TECHNOLOGY

1/16" = 1'-0"

NORTH

KEYNOTES:

1. CONTRACTOR TO PROVIDE PATHWAY FROM NEAREST TELECOM ROOM TO SITE POLE FOR FUTURE DATA FOR WIRELESS ACCESS POINT AND SECURITY CAMERA.

IDENTIFICATION STAMP
DIV. OF THE STATE ARCHITECT
APP: 03-125900 INC:
REVIEWED FOR
SS ☑ FLS ☑ ACS ☑
DATE: 03/18/2026

LPA
ARCHITECTURE ENGINEERING INTERIOR DESIGN
LANDSCAPE ARCHITECTURE PLANNING
949-261-1001 Office
LPADesignStudios.com
5301 California Avenue, Suite 100
Irvine, California 92617

REGISTERED PROFESSIONAL ENGINEER
NESTOR C. IGNACIO JR.
Lic. E16934
Exp. 6-30-2027
ELECTRICAL
STATE OF CALIFORNIA

IMEG
www.imegcorp.com
300 NORTH LAKE AVENUE
12TH FLOOR
PASADENA, CA 91101
P: 626.463.2800 F: 626.463.2801
PROJECT #25007252.00

This document and all other project documents, ideas, aesthetics and designs incorporated therein are instruments of service. All project documents are copyright protected, are the property of LPA, Inc. (LPA) and cannot be lawfully used in whole or in part for any project or purpose except as set forth in the contractual agreement between LPA and its Client. The unauthorized disclosure and/or use of the project documents (including the creation of derivative works), may give rise to liability for copyright infringement, unlawful disclosure, use or misappropriation of property rights held by LPA. The unauthorized use of the project documents will give rise to the recovery of monetary losses and damages including attorney fees and costs for which the unauthorized user will be held liable.
Project documents describe the design intent of the work and are not a representation of as-built or existing conditions. LPA is not responsible for any discrepancies between the project documents and the existing conditions.

© LPA, Inc.

ALTADENA ELEMENTARY SCHOOL

743 E Calaveras St,
Altadena, CA 91001

Developed for
ALTADENA ELEMENTARY SCHOOL

Revision	Date

Submittal	Date
DSA SUBMITTAL	02/02/2026

Job Number	33366
Checked By	Checker
Scale	1/16" = 1'-0"

T200

SITE PLAN - TECHNOLOGY

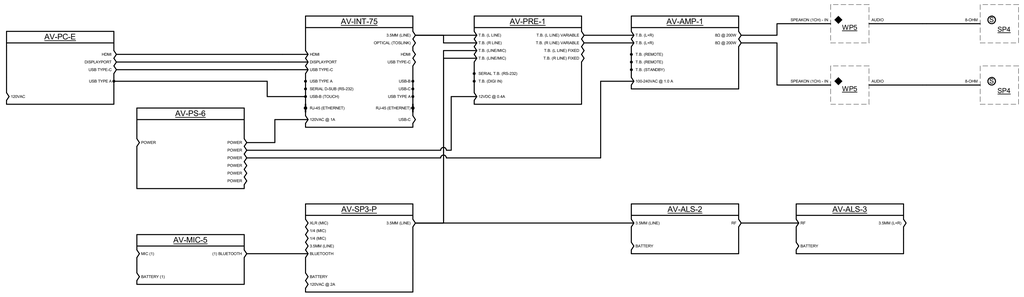

1 PORTABLE INTERACTIVE DISPLAY CART FUNCTIONAL DIAGRAM

NO SCALE

NOTES:

1. ASSEMBLE AV-SP3-P IN A TURNKEY MANNER WITHIN CASE FOR USER VOICE REINFORCEMENT AND INTEGRATE AV-MIC-5.
2. CONFIGURE AV-ALS-2 AND AV-ALS-3 TO A CARRIER FREQUENCY NOT IN CONFLICT WITH SURROUNDING FREQUENCIES AND CONFIRM OPERATION. TURN OVER TO OWNER'S REPRESENTATIVE.

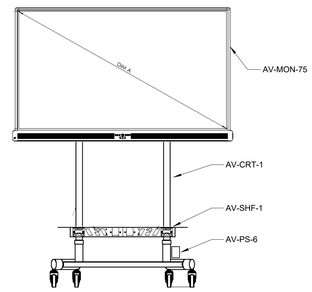

2 PORTABLE INTERACTIVE DISPLAY CART ELEVATION

NO SCALE

NOTES:

1. ROUTE CABLES FROM DISPLAY'S CONNECTIVITY DOWN TO SHELF UTILIZING MOBILE CART'S INTEGRATED CABLE MANAGEMENT. LEAVE 3' OF EACH CABLE AVAILABLE AT THE SHELF FOR CONNECTION TO USER DEVICES. CABLES SHALL BE LONG ENOUGH TO ALLOW DISPLAY TO RAISE TO THE MAXIMUM HEIGHT ALLOWED BY THE CART WITHOUT LIMITATIONS IMPOSED BY CABLE LENGTH.
2. MOUNT POWER STRIP TO CART OR SHELF IN A LOCATION ALLOWABLE BY INTERACTIVE DISPLAY'S POWER CORD; ROUTE POWER CORD FROM DISPLAY TO POWER STRIP UTILIZING MOBILE CART'S INTEGRATED CABLE MANAGEMENT. DISPLAY SHALL BE ABLE TO RAISE TO THE MAXIMUM HEIGHT ALLOWED BY THE CART WITHOUT LIMITATIONS IMPOSED BY CORD LENGTH OR POWER STRIP LOCATION.
3. TOTAL CART ASSEMBLY WEIGHT IS 115.5 LBS. MAXIMUM HEIGHT IS 84.72".

IDENTIFICATION STAMP
DIV. OF THE STATE ARCHITECT
APP: 03-125900 INC:
REVIEWED FOR
SS ☑ FLS ☑ ACS ☑
DATE: 03/18/2026

LPA
ARCHITECTURE ENGINEERING INTERIOR DESIGN
LANDSCAPE ARCHITECTURE PLANNING
949-261-1001 Office
LPADesignStudios.com
5301 California Avenue, Suite 100
Irvine, California 92617

REGISTERED PROFESSIONAL ENGINEER
NESTOR C. IGNACIO
Lic. E16934
Exp. 6-30-2027
ELECTRICAL
STATE OF CALIFORNIA

IMEG
www.imegcorp.com
300 NORTH LAKE AVENUE
12TH FLOOR
PASADENA, CA 91101
P: 626.463.2800 F: 626.463.2801
PROJECT #25007252.00

This document and all other project documents, ideas, aesthetics and designs incorporated therein are instruments of service. All project documents are copyright protected, are the property of LPA, Inc. (LPA) and cannot be lawfully used in whole or in part for any project or purpose except as set forth in the contractual agreement between LPA and its Client. The unauthorized disclosure and/or use of the project documents (including the creation of derivative works), may give rise to liability for copyright infringement, unlawful disclosure, use or misappropriation of property rights held by LPA. The unauthorized use of the project documents will give rise to the recovery of monetary losses and damages including attorney fees and costs for which the unauthorized user will be held liable.
Project documents describe the design intent of the work and are not a representation of as-built or existing conditions. LPA is not responsible for any discrepancies between the project documents and the existing conditions.

© LPA, Inc.

ALTADENA ELEMENTARY SCHOOL

743 E Calaveras St,
Altadena, CA 91001

Developed for
ALTADENA ELEMENTARY SCHOOL

Revision	Date

Submittal	Date
DSA SUBMITTAL	02/02/2026

Job Number	33366
Checked By	Checker
Scale	12" = 1'-0"

T400

TECHNOLOGY DETAILS AND DIAGRAMS

TECHNOLOGY EQUIPMENT SCHEDULE

THE EQUIPMENT LIST ABBREVIATIONS AND THE TECHNOLOGY EQUIPMENT SCHEDULE ARE FOR THE CONVENIENCE OF THE CONTRACTOR. EACH CONTRACTOR SHALL BE RESPONSIBLE FOR VERIFICATION OF QUANTITIES AND SHALL FURNISH ALL MATERIAL REQUIRED, WHETHER SPECIFIED OR NOT, TO PRODUCE A SATISFACTORY WORKING SYSTEM.

CATALOG NUMBERS ARE NOT TO BE CONSIDERED COMPLETE BUT ARE GIVEN ONLY TO AID THE CONTRACTOR IN THE SEARCH FOR MATERIAL. NO MATERIAL SHALL BE ORDERED BY MANUFACTURER AND CATALOG NUMBER ONLY. EACH CONTRACTOR SHALL FIRST READ THE COMPLETE DESCRIPTION OF THE MATERIAL ON THESE DRAWINGS AND SPECIFICATIONS. THE FIRST MANUFACTURER LISTED IS THE BASIS OF DESIGN. "STANDARD COLOR" INDICATES FACTORY FINISH AVAILABLE AT NO ADDITIONAL CHARGE.

EQUIPMENT LIST ABBREVIATION	EQUIPMENT LIST DESCRIPTION	MANUFACTURER AND MODEL
AC-R1-W	CARD READER	VERKADA OWNER PROVIDED CONTRACTOR INSTALLED
AV-ALS-2	PORTABLE WIDE-BAND BODY-PACK ASSISTIVE LISTENING TRANSMITTER, 17 SELECTABLE FREQUENCIES BETWEEN 72MHZ AND 76MHZ, AT 75 KHZ PEAK WITH A FREQUENCY RESPONSE OF 180 HZ TO 13 KHZ. UP TO 30 HRS OPERATION WITH TWO AA ALKALINE BATTERIES, BATTERY RECHARGE ABILITY UTILIZING WILLIAMS SOUND DROP-IN CHARGERS. 3.5 MM MICROPHONE JACK AND 2.5 MM AUXILIARY AUDIO INPUT JACK. MICROPHONE CORD SERVES AS THE TRANSMITTING ANTENNA. THREE BUTTONS ON THE FRONT TO ACCESS CHANNEL SELECT, MASTER AND AUX GAIN, COMPRESSION ON/OFF. CHANNEL LOCK AND SCREEN ADJUSTMENTS, OLED SCREEN ON THE FRONT OF THE TRANSMITTER DISPLAYING CURRENT OPERATING STATUS AND MENU INFORMATION. ABILITY TO OPERATE IN DUAL CHANNEL MODE WHEREBY THE USER CAN SWITCH BETWEEN TWO DIFFERENT TRANSMITTING CHANNEL PRESETS, EACH WITH ITS OWN SET-UP PARAMETERS (CHANNEL, MASTER VOLUME, AUX VOLUME). POWER SWITCH ALSO SERVES AS A MICROPHONE MUTE CONTROL. COMPLIES WITH FCC PART 15 AND COVERED UNDER A LIMITED LIFETIME WARRANTY.	WILLIAMS AV PPA T46
AV-ALS-3	PORTABLE ASSISTIVE LISTENING RECEIVER. RECEIVER SHALL BE BODY-PACK STYLE WITH IMPACT-RESISTANT BLACK PC/ABS PLASTIC HOUSING AND HINGED BATTERY DOOR. UNIT SHALL INCLUDE DETACHABLE BELT CLIP FOR HANDS-FREE OPERATION. PROVIDE 3.5MM STEREO JACK TO ACCOMMODATE STEREO OR MONO LOW IMPEDANCE EARPHONES, HEADPHONES, OR NECKLOOPS. RECEIVER SHALL FEATURE HIGH-RESOLUTION OLED DISPLAY FOR STATUS AND MENU ACCESS, DIGITAL TUNING, DIGITAL SQUELCH, AND BATTERY-SAVING SLEEP/AUTO-OFF MODES. 17 PRESET WIDEBAND CHANNELS (72-76 MHZ) WITH CHANNEL-LOCK CAPABILITY. BATTERY COMPARTMENT SHALL INCLUDE SLIDE SWITCH FOR ALKALINE OR NIMH RECHARGEABLE BATTERY SELECTION. RECEIVER SHALL BE COMPATIBLE WITH WILLIAMS SOUND DROP-IN CHARGERS CHG 3512 AND CHG 3502. PROVIDE MAXIMUM OUTPUT OF 35MW AT 16Ω, AUDIO FREQUENCY RESPONSE 200HZ TO 15KHZ ±3DB, SIGNAL-TO-NOISE RATIO 65DB MINIMUM, AND SENSITIVITY 2µV OR BETTER AT 12DB SINAD. RECEIVER SHALL BE FCC COMPLIANT. PROVIDE ALL ACCESSORIES REQUIRED FOR FULL OPERATION, ONE (1) COMPATIBLE NECK LOOP, AND ONE (1) COMPATIBLE PAIR OF HEADPHONES.	WILLIAMS AV PPA R38
AV-ALS-4	WIRELESS FM ASSISTIVE LISTENING SYSTEM TRANSMITTER WITH 72-76 MHZ OPERATING FREQUENCY, COMPATIBLE WITH WILLIAMS SOUND FM RECEIVERS. FEATURES INCLUDE OLED DISPLAY, INTEGRATED AUDIO INPUT MIXER (XLR, 1/4" TRS, RCA, 3.5MM), USB PORT FOR CONFIGURATION, AND NETWORK CONTROL CAPABILITY. PROVIDES UP TO 1000 FT (300 M) TRANSMISSION RANGE, SELECTABLE CHANNELS, AND DIGITAL COMPANDING FOR HIGH FIDELITY AUDIO. INCLUDE RACK MOUNT KIT, ANTENNA, AND POWER SUPPLY.	WILLIAMS AV FM T55C D RPK 005
AV-AMP-1	0	EXTRON XPA U 2002
AV-AMP-3	FOUR-CHANNEL NETWORK POWER AMPLIFIER, 4 X 1000 WATTS @ 4/8 OHMS OR 70V/100V DIRECT DRIVE, CLASS D, Q-SYS ECOSYSTEM INTEGRATION, ETHERNET CONTROL AND MONITORING, FLEXIBLE OUTPUT ROUTING, BRIDGEABLE CHANNELS, 20 HZ – 20 KHZ FREQUENCY RESPONSE, <0.05% THD, 8 X 8 GPIO, 1U RACK MOUNT, UNIVERSAL POWER SUPPLY, REAR PANEL INPUT/OUTPUT CONNECTIONS, FAN COOLED, INCLUDES RACK MOUNT KIT. DIMENSIONS: 19" W X 1.75" H X 16.7" D. WEIGHT: 18.7 LBS.	QSC CX-Q 4K4
AV-AN1-W	WIRELESS MIC WALL MOUNT REMOTE ANTENNA WITH MOUNTING BRACKET AND PRE-MADE BNC TO BNC COAX CABLE.	SHURE ANTENNA UA8 BRACKET UA505 CABLE UA825
AV-AN2-W	PROVIDED WITH AV-BT-1	N/A
AV-CAB-2	WALL MOUNTED EQUIPMENT RACK. 12 SPACE (21" HIGH) X 22" DEEP SECTIONAL WALL RACK WITH NO FRONT DOOR, REMOVABLE SIDE PANELS, AND VENTILATED TOP AND BOTTOM PANELS FOR PASSIVE COOLING. RACK SHALL SUPPORT UP TO 200 LBS. OF EQUIPMENT, INCLUDE CABLE MANAGEMENT FEATURES, AND PROVIDE 19" EIA-310-D COMPLIANT RAILS WITH RU MARKINGS. FINISH: BLACK POWDER COAT. PROVIDE ALL REQUIRED MOUNTING HARDWARE AND ACCESSORIES FOR COMPLETE INSTALLATION. INSTALL A 12" X 12" SQUARE PULL BOX. PROVIDE 1" EMT CONDUIT PER DEVICE SERVED BY THIS RACK ON PLANS OR UNLESS OTHERWISE NOTED.	MIDDLE ATLANTIC DWR-12-22
AV-CM-1-W	DUAL CAMERA WITH SPEAKER TRACKING AND SWITCHING	CRESTRON IV-CAMHK-12-#-1B
AV-CRT-1	LARGE FORMAT MOBILE CART FOR FLAT-PANEL AND INTERACTIVE DISPLAYS UP TO 98" AND 300 LBS. OPEN MOBILE BASE DESIGN FOR NESTING MULTIPLE CARTS, LOCKING HEAVY-DUTY 4" CASTERS FOR MANEUVERABILITY, AND ADJUSTABLE MOUNTING HEIGHT ALONG T60 POLES. SUPPORTS BOTH PORTRAIT AND LANDSCAPE ORIENTATION. MAXIMUM VESA MOUNTING PATTERN: 200MM X 200MM TO 900MM X 600MM. FINISH: BLACK & SILVER. DIMENSIONS: 44.94" (W) X 84.72" (H) X 28.98" (D). WEIGHT CAPACITY: 300 LBS. PRODUCT WEIGHT: 79 LBS. LIMITED LIFETIME WARRANTY. NOTE: THIS IS A MOBILE CART AND IS NOT WALL MOUNTED. NO BACKBOX OR CONDUIT INSTALLATION REQUIRED.	PREMIER MOUNTS LFC-L
AV-DSP-1	AUDIO, VIDEO, AND CONTROL (AV&C) PROCESSOR, 64 X 64 NETWORKED AUDIO CHANNELS (Q-LAN / AES67), EIGHT ON-BOARD FLEX CHANNELS AND GPIO, 8 X ACOUSTIC ECHO CANCELLATION (AEC) PROCESSORS, UP TO 32 X 32 DANTE AUDIO CHANNELS (8 X 8 INCLUDED), SUPPORTS UP TO THREE Q-SYS NM-T1 TABLETOP MICROPHONES (UP TO SIX WITH COLLABORATION BUNDLE SCALING LICENSE), USB AV BRIDGING (8 X 8 AUDIO + Q-SYS CAMERA SUPPORT), EXTERNAL USB AUDIO DEVICE HOST, SUPPORTS UP TO 2 VOIP SOFTPHONE INSTANCES, FULL FEATURED Q-SYS CONTROL ENGINE, DUAL GIGABIT ETHERNET PORTS, INTERNAL POWER SUPPLY, 1U HALF-WIDTH, INCLUDES MOUNTING HARDWARE. DIMENSIONS: 11.3" L X 8.7" W X 1.7" H. WEIGHT: 4.0 LBS.	Q-SYS CORE 8 FLEX
AV-INT-75	INTERACTIVE FLAT PANEL DISPLAY, 75" DIAGONAL, 4K UHD RESOLUTION, MULTI-TOUCH CAPABILITY, INTEGRATED ANDROID 13 OPS MODULE, WI-FI 6, BLUETOOTH 5.2, USB-C WITH 100W POWER DELIVERY, MULTIPLE HDMI INPUTS, INTEGRATED 2X 18W + 15W SUBWOOFER SOUND SYSTEM, ADVANCED PALM REJECTION, PEN AND TOUCH DIFFERENTIATION, SECURE SIGN-IN, REMOTE MANAGEMENT, INSTANT WHITEBOARD, SCREENSHARE, AND CLOUD CONNECTIVITY. INCLUDES VESA MOUNTING COMPATIBILITY, ENERGY STAR CERTIFIED, SUITABLE FOR EDUCATIONAL AND COLLABORATIVE ENVIRONMENTS. COLOR: BLACK. CONTRACTOR TO PROVIDE MATCHING VESA MOUNT TO INTERFACE WITH MOBILE CART.	PROMETHEAN ActivPANEL 10 PREMIUM FOR REFERENCE ONLY COORDINATE WITH OWNER
AV-LED-75	75" UHD FLAT PANEL DISPLAY	LG 75UR640SPUD
AV-MIC-5	WIRELESS BELT-PACK TRANSMITTER DESIGNED TO WORK WITH ANCHOR AUDIO "ANCHORLINK" TECHNOLOGY. 3.5 MM JACK FOR LAVALIER/COLLAR/HEADSET MIC. 1.9 GHZ FREQUENCY BAND. POWERED BY TWO AA BATTERIES. MUTE AND VOLUME CONTROLS. CONTRACTOR TO PROVIDE LM-LINK LAPEL MICROPHONE.	ANCHOR AUDIO WB-LINK

TECHNOLOGY EQUIPMENT SCHEDULE

THE EQUIPMENT LIST ABBREVIATIONS AND THE TECHNOLOGY EQUIPMENT SCHEDULE ARE FOR THE CONVENIENCE OF THE CONTRACTOR. EACH CONTRACTOR SHALL BE RESPONSIBLE FOR VERIFICATION OF QUANTITIES AND SHALL FURNISH ALL MATERIAL REQUIRED, WHETHER SPECIFIED OR NOT, TO PRODUCE A SATISFACTORY WORKING SYSTEM.

CATALOG NUMBERS ARE NOT TO BE CONSIDERED COMPLETE BUT ARE GIVEN ONLY TO AID THE CONTRACTOR IN THE SEARCH FOR MATERIAL. NO MATERIAL SHALL BE ORDERED BY MANUFACTURER AND CATALOG NUMBER ONLY. EACH CONTRACTOR SHALL FIRST READ THE COMPLETE DESCRIPTION OF THE MATERIAL ON THESE DRAWINGS AND SPECIFICATIONS. THE FIRST MANUFACTURER LISTED IS THE BASIS OF DESIGN. "STANDARD COLOR" INDICATES FACTORY FINISH AVAILABLE AT NO ADDITIONAL CHARGE.

EQUIPMENT LIST ABBREVIATION	EQUIPMENT LIST DESCRIPTION	MANUFACTURER AND MODEL
AV-MIC-6	DUAL WIRELESS MICROPHONE SYSTEM WITH DANTE, 1 RACK UNIT, INCLUDES BODY PACK, LAVALIER MICROPHONE, INCLUDES HANDHELD MICROPHONE TRANSMITTER. INCLUDES DUAL PORT CHARGING STATION.	SHURE ULXD4D-GV DANTE DUAL RECEIVER ULXD1 BODY PACK W MX150 LAVALIER ULXD2/SM58 HANDHELD TRANSMITTER SBC200 DOCKING STATION
AV-MNT-1	AV BACK BOX AND LED DISPLAY MOUNT WITH X-ARM AND CRESTRON FLEX PLATE	RP VISUAL WALLMATE 32B
AV-MNT-2	AV BACK BOX AND LED DISPLAY MOUNT WITH X-ARM	RP VISUAL WALLMATE 32B
AV-MP1-W	XLR 3-PIN FEMALE CONNECTOR, MOUNTED ON 2RU RACK BLANK.	NEUTRIK D SERIES
AV-MP2-R	DUAL WIRELESS MICROPHONE SYSTEM WITH DANTE, 1 RACK UNIT, INCLUDES BODY PACK, LAVALIER MICROPHONE, INCLUDES HANDHELD MICROPHONE TRANSMITTER. INCLUDES DUAL PORT CHARGING STATION.	SHURE ULXD4D-GV DANTE DUAL RECEIVER ULXD1 BODY PACK W MX150 LAVALIER ULXD2/SM58 HANDHELD TRANSMITTER SBC200 DOCKING STATION
AV-MP3-C	OVERHEAD MINI MICROPHONE, ELECTRET CONDESNER, INTERCHANGEABLE CARTRIDGES,RF FILTERING, FREQUENCY RESPONSE 50-1000HZ, PHANTON POWER 11-52VDC 2.0MA, PROVIDE BLACK IN COLOR WITH CARDIOID CARTRIDGE.	SHURE MX200
AV-NS-1	MANAGED NETWORK SWITCH. 12-PORT GIGABIT ETHERNET L2+/L3 LITE MANAGED SWITCH WITH 8 POE+ PORTS (UP TO 240W TOTAL POWER BUDGET), 2 COMBO SFP COPPER/FIBER PORTS, AND 2 DEDICATED SFP PORTS. SUPPORTS ADVANCED NETWORKING FEATURES INCLUDING VLAN, QOS, IGMP SNOOPING, STATIC ROUTING, AND SECURITY MANAGEMENT. INCLUDES WEB-BASED GUI, CLI, AND SNMP MANAGEMENT OPTIONS. PROVIDE ALL REQUIRED MOUNTING HARDWARE, POWER CORD, AND ACCESSORIES FOR RACK OR WALL INSTALLATION. DO NOT CONNECT TO SCHOOL LAN.	NETGEAR GSM4212P
AV-PC-E	USERS' BRING-YOUR-OWN-DEVICE (BYOD) COMPUTER; PROVIDED BY OTHERS	*
AV-PRE-1	0	EXTRON MVC 121xi
AV-PS-6	SURGE PROTECTOR, 6 NEMA 5-15R OUTLETS WITH LOCKING SAFETY COVERS, 15 FT. NEMA 5-15P POWER CORD, 120V AC, 15A, 1620 JOULES SURGE SUPPRESSION, ALL-METAL HOUSING, INTEGRATED LED INDICATOR, SWITCHLESS DESIGN, RESETTABLE 15A CIRCUIT BREAKER, MOUNTING FLANGES INCLUDED.	EATON UL24CB-15
AV-SHF-1	LARGE SHELF ACCESSORY COMPATIBLE WITH PREMIER MOUNTS CART PRODUCTS, PROVIDES A STABLE PLATFORM FOR AV EQUIPMENT SUCH AS LAPTOPS OR DOCUMENT CAMERAS. ADJUSTABLE HEIGHT, BLACK FINISH, MAXIMUM WEIGHT CAPACITY 50 LBS, SHELF DIMENSIONS: 39.82" W X 17.5" D.	PREMIER MOUNTS PSD-SHLFXL
AV-SP1-C	PERFORMANCE AUDIO SPEAKER, CEILING MOUNTED, RECESSED, SOUND REINFORCEMENT, HEMISPHERICAL DISPERSION, FULL RANGE TYPE WITH BASS REFLEX ENCLOSURE. 60 WATT (16 OHMS) AND 120 WATT (8 OHMS) CONTINUOUS POWER HANDLING, SENSITIVITY: 90dB SPL @1W/1M, 70Hz-20kHz FREQUENCY RESPONSE. PRODUCTS TO BE CONSIDERED FOR PRE-APPROVAL MUST BE SUBMITTED WITH A POLAR FREQUENCY RESPONSE CURVE AT 500, 1000, 2000, 4000 AND 8000 Hz, AS WELL AS A FREQUENCY RESPONSE CURVE.	JBL CONTROL 45
AV-SP1-W	PRO AUDIO SPEAKER, INDOOR/OUTDOOR, 10" WOOFER, 2414H-C COMPRESSION DRIVER, 100°X100° COVERAGE, 250W @8Ω, 60W 70V/100V MULTI TAP TRANSFORMER. INVISIBALL MOUNTING HARDWARE INCLUDED, DIMENSIONS 23.3"H X 14.6"W X 13.5"D, WEIGHT 41.5LBS.	JBL CONTROL 31
AV-SP2-W	PRO AUDIO SPEAKER, INDOOR/OUTDOOR, TWO-WAY 8" WOOFER, 1" PEI TWEETER, 100°X100° COVERAGE, 120W @8Ω, 60W 70V/100V MULTI TAP TRANSFORMER. INVISIBALL MOUNTING HARDWARE INCLUDED, DIMENSIONS 15.2"H X 11.1"W X 8.6"D, WEIGHT 15LBS.	JBL CONTROL 28-1
AV-SP3-P	PORTABLE PERSONAL PA SYSTEM DESIGNED FOR SPEECH AND SMALL AUDIENCE USE. BUILT-IN DUAL WIRELESS MICROPHONE RECEIVER (1 GHZ WIRELESS FREQUENCY). 4.5" WOOFER, 30 W RATED POWER OUTPUT (AC/DC), AND MAXIMUM SPL OF ~100 DB AT 1 M. FREQUENCY RESPONSE 100 HZ TO 15 KHZ ±3DB. AC INPUT (100-240 V, 50/60HZ). MIC/LINE INPUTS: ¼" INPUT, 3.5 MM AUX INPUT (AND SEPARATE AUX MIC INPUT), 3.5MM AUX OUTPUT. CONTRACTOR TO PROVIDE RC-30 BATTERY RECHARGE KIT AND SOFT-MINI CARRY BAG.	ANCHOR AUDIO AN-MINI-U2BT
AV-SP4-W	LOUDSPEAKER, PASSIVE COLUMN ARRAY, WEATHER RESISTANT, 8 X 3" NEODYMIUM FULL-RANGE DRIVERS, PASSIVE UNIBEAM TECHNOLOGY, 70V/100V TRANSFORMER WITH MULTIPLE TAPS (8W, 15W, 30W, 60W), 30W POWER HANDLING (EN54-24), 114 DB PEAK SPL, 120° HORIZONTAL DISPERSION, 30° ASYMMETRICAL VERTICAL DISPERSION, IP64 RATED, EXTRUDED ALUMINUM ENCLOSURE, PERFORATED ALUMINUM GRILLE, BLACK OR WHITE FINISH, INCLUDES SURFACE-MOUNT PAN BRACKET. DIMENSIONS: 4-3/8" W X 17-1/8" H X 4-3/4" D. WEIGHT: 10.2 LBS. INSTALL A 4" SQUARE BACKBOX WITH A SINGLE GANG ROUGH-IN. INSTALL A 1" EMT CONDUIT TO COMMUNICATIONS CLOSET DATA D110.	RENKUS- HEINZ UBX8 W-WALL-UBX-PT
AV-TP2-W	IOS-BASED TABLET COMPUTER WITH MULTI-TOUCH DISPLAY, WI-FI CONNECTIVITY, MINIMUM 10.2" RETINA DISPLAY, BASE GB STORAGE, FRONT AND REAR CAMERAS, BUILT-IN MICROPHONE AND SPEAKERS, BLUETOOTH, AND USB-C CONNECTOR. PROVIDE WITH POWER ADAPTER, CHARGING CABLE, AND REQUIRED ACCESSORIES. CONFIGURE FOR ENTERPRISE USE AS REQUIRED. COLOR: STANDARD APPLE FINISH (SILVER, SPACE GRAY, OR AS SPECIFIED). Q-SYS CONTROL APP, SOFTWARE APPLICATION FOR APPLE IPAD OR ANDROID TABLET, PROVIDES CUSTOMIZABLE USER INTERFACE FOR CONTROL OF Q-SYS ECOSYSTEM DEVICES INCLUDING AUDIO, VIDEO, AND CONTROL SYSTEMS. ENABLES TOUCHSCREEN CONTROL OF PRESETS, VOLUME, SOURCE SELECTION, ROOM COMBINING, AND OTHER SYSTEM FUNCTIONS. SUPPORTS SECURE NETWORK COMMUNICATION WITH Q-SYS CORE PROCESSORS. PROVIDE ALL REQUIRED LICENSING, CONFIGURATION, AND INTEGRATION SERVICES. INSTALL ON OWNER-PROVIDED OR CONTRACTOR-PROVIDED TABLET AS SPECIFIED.	APPLE IPAD 11"; IOS VER.26 OR LATER Q-SYS Q-SYS CONTROL APP (iOS)
AV-UCE-2	INTEGRATOR SERIES UC BRACKET ASSEMBLY WITH UC ENGINE AND UCPR EXTENDER	CRESTRON UC-CX100-T
AV-UCPR-1	UC PRESENTATION RECEIVER	CRESTRON UC-PR
AV-WP5-W	SINGLE WALLPLATE WITH NL2MP SPEAKON JACK IN WEATHER RESISTANT BOX	NEUTRIK #102L
AV-WPD-1	WIRELESS PRESENTATION DEVICE AND DONGLE	CRESTRON AM-3200 AM-TX3-100ATE 16B
SC-RI-W	TECHNOLOGY ROUGH-IN FOR FUTURE USE	N/A
SC-WAP-W	INFORMATION OUTLET, POLE MOUNT, 2-PORT, NO COVERPLATE. CABLES SHALL BE TERMINATED WITH MALE PLUG ASSEMBLY. INTENDED TO PROVIDE CONNECTIVITY FOR FUTURE WIRELESS ACCESS POINT.	LEGRAND FACEPLATE: N/A MALE PLUG: CAT6A

IDENTIFICATION STAMP
DIV. OF THE STATE ARCHITECT
APP: 03-125900 INC:
REVIEWED FOR
SS ☑ FLS ☑ ACS ☑
DATE: 03/18/2026

LPA
ARCHITECTURE ENGINEERING INTERIOR DESIGN
LANDSCAPE ARCHITECTURE PLANNING
949-261-1001 Office
LPADesignStudios.com
5301 California Avenue, Suite 100
Irvine, California 92617

REGISTERED PROFESSIONAL ENGINEER
NESTOR C. IGNACIO
Lic. E16934
Exp. 6-30-2027
CIVIL
STATE OF CALIFORNIA

IMEG
www.imegcorp.com
300 NORTH LAKE AVENUE
12TH FLOOR
PASADENA, CA 91101
P: 626.463.2800 F: 626.463.2801
PROJECT #25007252.00

This document and all other project documents, ideas, aesthetics and designs incorporated therein are instruments of service. All project documents are copyright protected, are the property of LPA, Inc. (LPA) and cannot be lawfully used in whole or in part for any project or purpose except as set forth in the contractual agreement between LPA and its Client. The unauthorized disclosure and/or use of the project documents (including the creation of derivative works), may give rise to liability for copyright infringement, unlawful disclosure, use or misappropriation of property rights held by LPA. The unauthorized use of the project documents will give rise to the recovery of monetary losses and damages including attorney fees and costs for which the unauthorized user will be held liable.
Project documents describe the design intent of the work and are not a representation of as-built or existing conditions. LPA is not responsible for any discrepancies between the project documents and the existing conditions.

© LPA, Inc.

ALTADENA ELEMENTARY SCHOOL

743 E Calaveras St,
Altadena, CA 91001

Developed for
ALTADENA ELEMENTARY SCHOOL

Revision	Date

Submittal	Date
DSA SUBMITTAL	02/02/2026

Job Number	33366
Checked By	Checker
Scale	

T500

TECHNOLOGY SCHEDULES

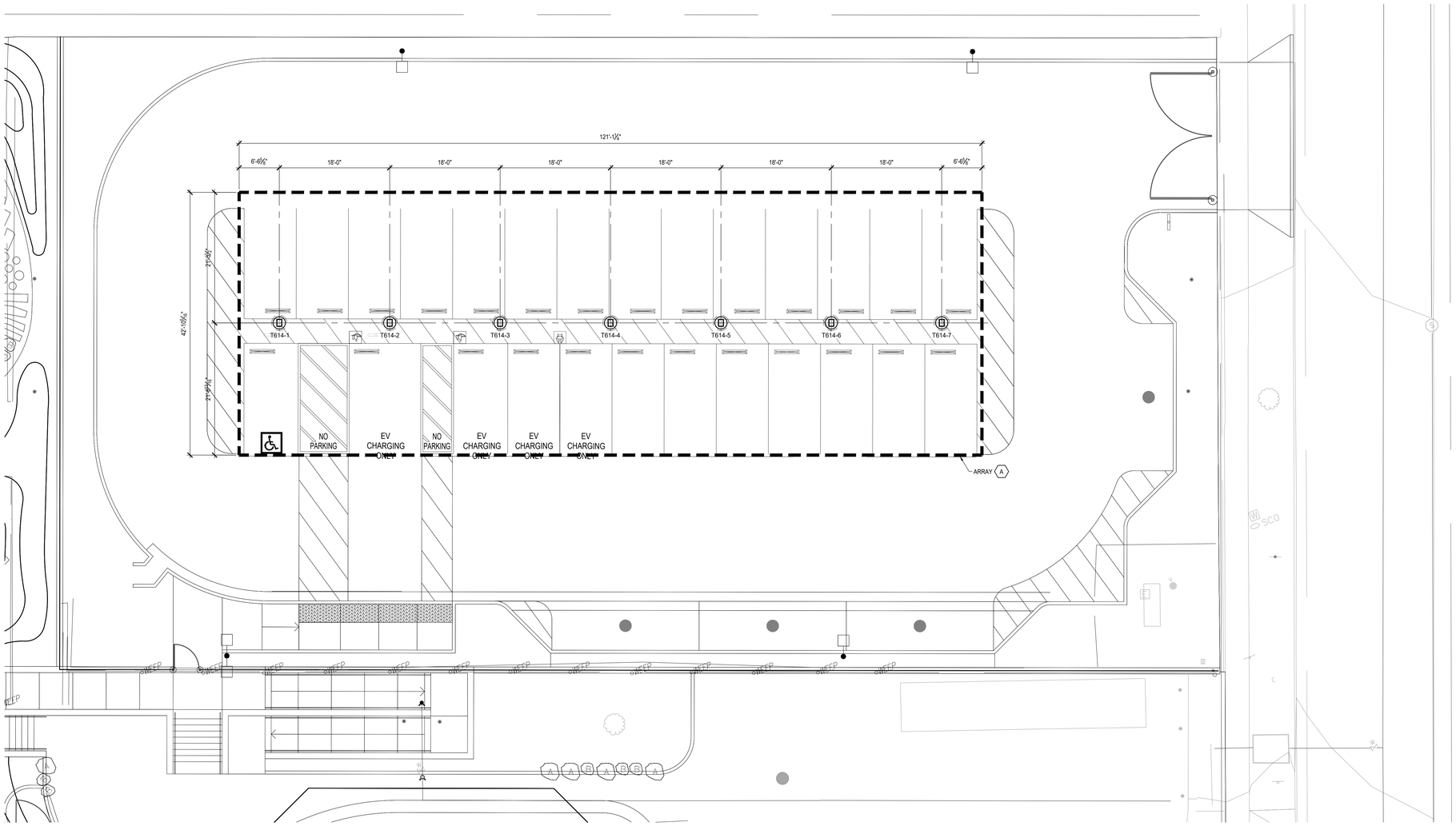

1 COLUMN PLAN
1/8" = 1'-0"

NORTH

LEGEND

(N) PHOTOVOLTAIC ARRAY OUTLINES

INDICATES COLUMN WITH NON-STRUCTURAL CONCRETE BOLLARD.

GENERAL NOTES

REFERS TO ULTIMATE GUARDIAN 22.6.1 PC: A# PROJECT A# 04-123955

G1. CONTRACTOR TO DEMO (E) LIGHT POLES AND LIGHT FIXTURES AS REQUIRED.

G2. SEE SHEET S-20 FOR TYPICAL CONDUIT ROUTING.

G3. SEE DETAIL 3/S-20 FOR TYPICAL CONDUIT MOUNTING.

G4. SEE DETAIL 4/S-20 OR 5/S-20 FOR TYPICAL ELECTRICAL BOX MOUNTING.

G5. ALL DIMENSIONS ON THIS SHEET ARE PROJECTED FLAT.

G6. MIN. 4,000 psi CONCRETE WITH TYPE II CEMENT.

G7. SOILS CLASS PER SITE SPECIFIC STRUCTURAL SHEET(S).

G8. DIMENSION INCLUDES 1.5" EXTRA LENGTH ON EACH END OF EACH ARRAY.

G9. CONTRACTOR TO DEMO EXISTING BUSHES AND TREES AS REQUIRED.

G10. MIN (1) STAR WASHER IN CONFORMANCE WITH ASME B18.21.1 EACH END OF EACH PURLIN.

G11. GEOTECHNICAL REPORT # 25-3846 DATED JANUARY 22, 2026 PROVIDED BY KOURY ENGINEERING AND ADDENDUM LETTER DATED MARCH 10, 2026

KEY NOTES

1 SEE SHEET PV-2 FOR CANOPY DETAILS

2 DEEPENED FOUNDATION PER 6/S-21.

SEISMIC CRITERIA

SHORT SPECTRAL RESPONSE:	S_S = 2.19 g
LONG SPECTRAL RESPONSE:	S_1 = 0.73 g
SHORT SPECTRAL RESPONSE:	S_{DS} = 1.56 g
LONG SPECTRAL RESPONSE:	S_{D1} = 0.96 g
SEISMIC DESIGN CATEGORY:	D
SITE CLASS:	CD
ROOF SNOW LOAD:	0 PSF

DESIGN WIND SPEED

BASIC WIND SPEED = 110 mph
V_{ASD} = 85 MPH
WIND EXPOSURE = C

CONCRETE INSPECTION

PER SECTION 1705A.3.3.2 - BATCH PLANT INSPECTION NOT REQUIRED WITH FOLLOWING REQUIREMENTS:

1. AN APPROVED AGENCY SHALL CHECK THE FIRST BATCH AT THE START OF THE DAY TO VERIFY MATERIALS AND PROPORTIONS CONFORM TO THE APPROVED MIX DESIGN.
2. A LICENSED WEIGHMASTER SHALL POSITIVELY IDENTIFY QUANTITY OF MATERIALS AND CERTIFY EACH LOAD BY A BATCH TICKET.
3. BATCH TICKETS, INCLUDING MATERIAL QUANTITIES AND WEIGHTS SHALL ACCOMPANY THE LOAD, SHALL BE TRANSMITTED TO THE INSPECTOR OF RECORD BY THE TRUCK DRIVER WITH LOAD IDENTIFIED THEREON. THE LOAD SHALL NOT BE PLACED WITHOUT A BATCH TICKET IDENTIFYING THE MIX. THE INSPECTOR OF RECORD SHALL KEEP A DAILY RECORD OF PLACEMENTS, IDENTIFYING
   EACH TRUCK, ITS LOAD, AND TIME OF RECEIPT AT THE JOBSITE, AND APPROXIMATE LOCATION
4. OF DEPOSIT IN THE STRUCTURE AND SHALL MAINTAIN A COPY OF THE DAILY RECORD AS REQUIRED BY THE ENFORCEMENT AGENCY.

IDENTIFICATION STAMP
DIV. OF THE STATE ARCHITECT
APP: 03-125900 INC:
REVIEWED FOR
SS ☑ FLS ☑ ACS ☑
DATE: 03/18/2026

LPA
ARCHITECTURE ENGINEERING INTERIOR DESIGN
LANDSCAPE ARCHITECTURE PLANNING
949-261-1001 Office
LPADesignStudios.com
5301 California Avenue, Suite 100
Irvine, California 92617

REGISTERED PROFESSIONAL ENGINEER
DUSTIN K. REBERTAK
S 5885
CIVIL
STATE OF CALIFORNIA

STEL ENGINEERING
26030 ACERO
MISSION VIEJO, CA 92691
949.305.1150 | FAX 949.305.1420

This document and all other project documents, ideas, aesthetics and designs incorporated therein are instruments of service. All project documents are copyright protected, are the property of LPA, Inc. (LPA) and cannot be lawfully used in whole or in part for any project or purpose except as set forth in the contractual agreement between LPA and its Client. The unauthorized disclosure and/or use of the project documents (including the creation of derivative works), may give rise to liability for copyright infringement, unlawful disclosure, use or misappropriation of property rights held by LPA. The unauthorized use of the project documents will give rise to the recovery of monetary losses and damages including attorney fees and costs for which the unauthorized user will be held liable.
Project documents describe the design intent of the work and are not a representation of as-built or existing conditions. LPA is not responsible for any discrepancies between the project documents and the existing conditions.

© LPA, Inc.

ALTADENA ELEMENTARY SCHOOL

743 E. CALAVERA ST,
ALTADENA CA 91001

Developed for
PASADENA UNIFIED SCHOOL DISTRICT

Submittal	Date	Revision	Date
DSA SUBMITTAL	02/02/2026		

Job Number	26-1010
Checked By	MDS
Scale	AS NOTED

COLUMN PLAN

PV-1

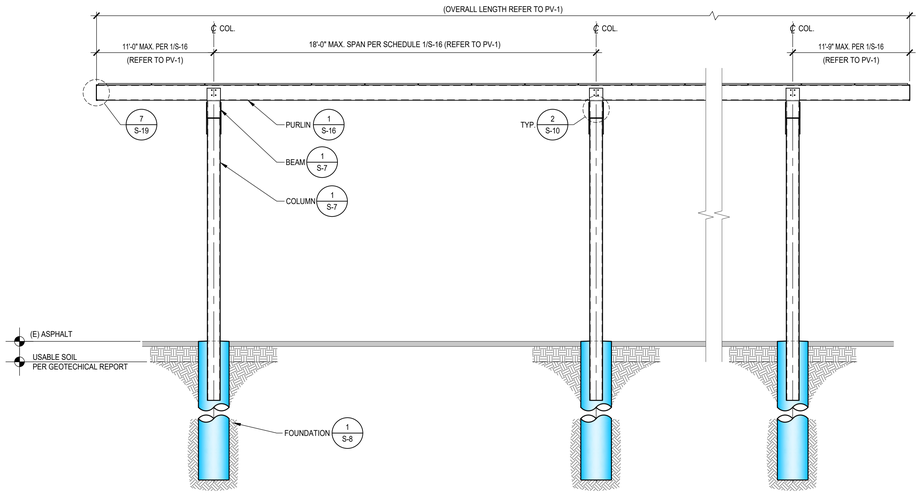

3 - T-STRUCTURE TYPICAL SIDE ELEVATION SIMPLE-SPAN
1/4" = 1'-0"

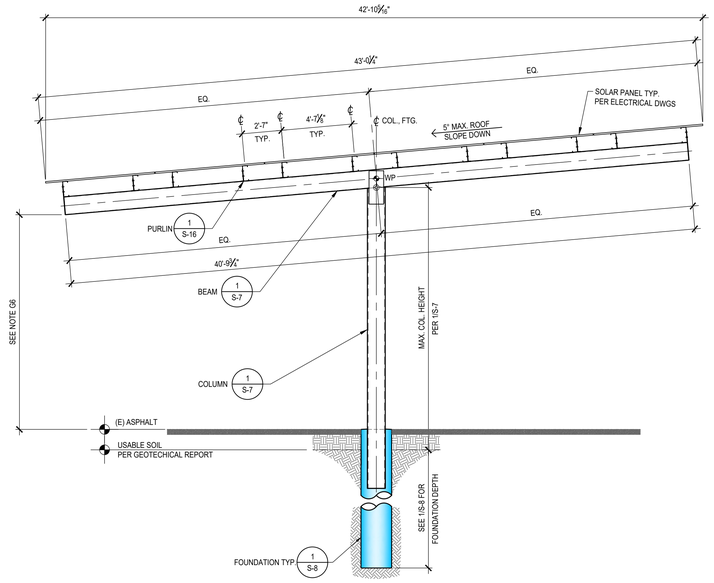

2 - T-STRUCTURE END ELEVATION SIMPLE-SPAN
1/4" = 1'-0"

GENERAL NOTES

REFERS TO ULTIMATE GUARDIAN 22.6.1 PC: A# PROJECT A# 04-123955

G1. FOR DETAILS, REFER TO 1 S-6, 2 S-6, 3 S-6

G2. NOT USED.

G3. T-STRUCTURE SOILS CLASS W PER SCHEDULE ON S-3.

G4. STEEL SHALL BE ORDERED AND INSTALLED BASED ON THE SLOPED DIMENSIONS, NOT THE FLAT DIMENSIONS.

G5. SOLAR PANEL ATTACHMENT PER DETAILS ON SHEET S-18.

G6. STRUCTURES SHALL BE CONSTRUCTED TO 14'-0" MIN. CLR.

G7. ASSUMED TOLERANCE FOR PURLIN SLOPE: = 6"/30'
GEOTECHNICAL REPORT DIFFERENTIAL SETTLEMENT = 1"/30'
RESULTING SITE ALLOWABLE PURLIN SLOPE: = 5"/30'
BOLT HOLES IN PURLIN SHALL BE 1/8" OVERSIZED PER STEEL NOTE #24 ON SHEET S-3.

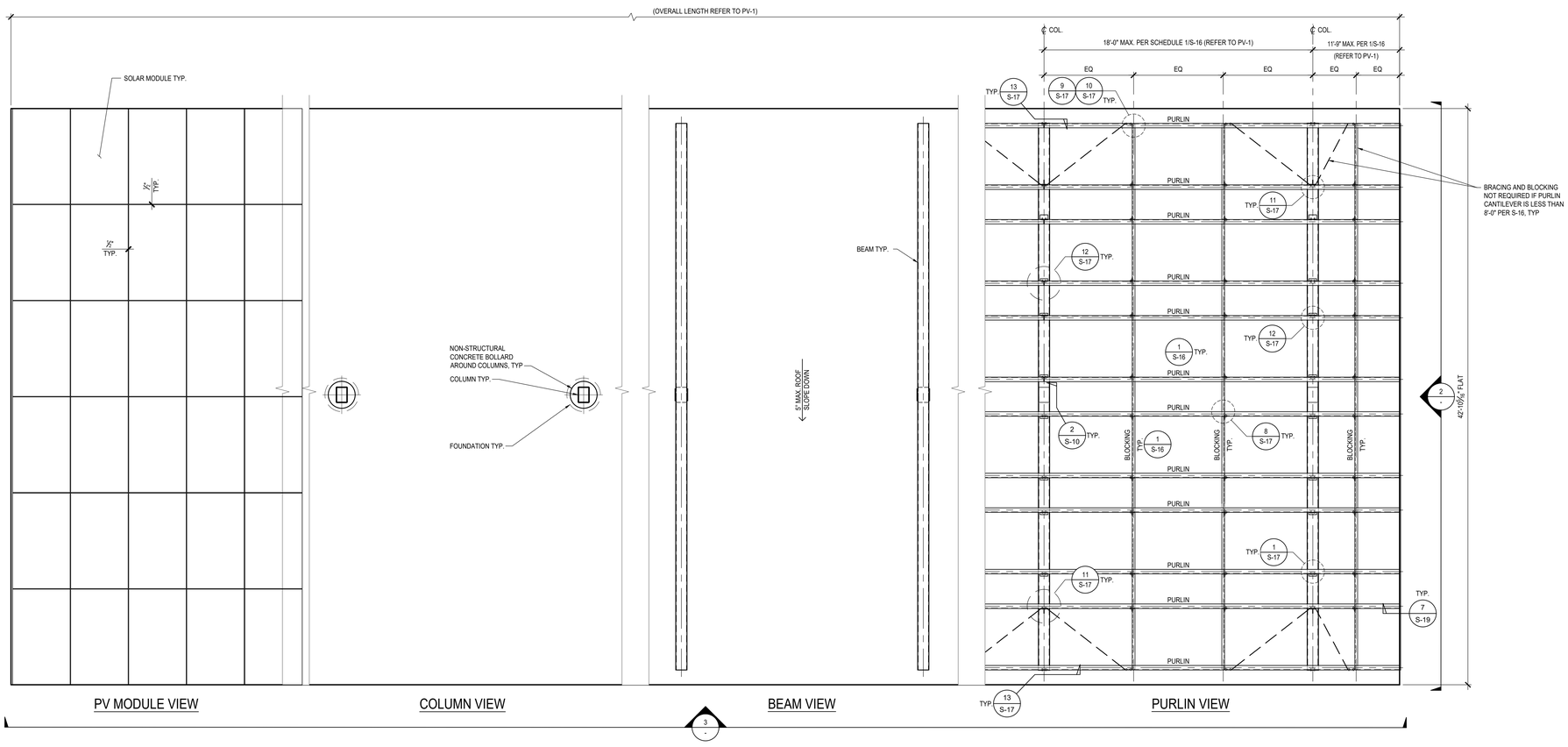

1 - T-STRUCTURE FRAMING PLAN SIMPLE-SPAN
1/4" = 1'-0"

IDENTIFICATION STAMP
DIV. OF THE STATE ARCHITECT
APP: 03-125900 INC:
REVIEWED FOR
SS ☑ FLS ☑ ACS ☑
DATE: 03/18/2026

LPA

ARCHITECTURE ENGINEERING INTERIOR DESIGN
LANDSCAPE ARCHITECTURE PLANNING

949-261-1001 Office

LPADesignStudios.com

5301 California Avenue, Suite 100
Irvine, California 92617

REGISTERED PROFESSIONAL ENGINEER
DUSTIN K. REBERT
S 5885
CIVIL
STATE OF CALIFORNIA

STEL ENGINEERING

26030 ACERO
MISSION VIEJO, CA 92691
949.305.1150 | FAX 949.305.1420

This document and all other project documents, ideas, aesthetics and designs incorporated therein are instruments of service. All project documents are copyright protected, are the property of LPA, Inc. (LPA) and cannot be lawfully used in whole or in part for any project or purpose except as set forth in the contractual agreement between LPA and its Client. The unauthorized disclosure and/or use of the project documents (including the creation of derivative works), may give rise to liability for copyright infringement, unlawful disclosure, use or misappropriation of property rights held by LPA. The unauthorized use of the project documents will give rise to the recovery of monetary losses and damages including attorney fees and costs for which the unauthorized user will be held liable.
Project documents describe the design intent of the work and are not a representation of as-built or existing conditions. LPA is not responsible for any discrepancies between the project documents and the existing conditions.

© LPA, Inc.

ALTADENA ELEMENTARY SCHOOL

743 E. CALAVERA ST,
ALTADENA CA 91001

Developed for
PASADENA UNIFIED SCHOOL DISTRICT

Revision	Date

Submittal	Date
DSA SUBMITTAL	02/02/2026

Job Number	26-1010
Checked By	MDS
Scale	AS NOTED

6 PANEL
T-STRUCTURE
SIMPLE-SPAN
SITE SPECIFIC

PV-2

ULTIMATE GUARDIAN 22.6.1 - HIGH WIND & HIGH SEISMIC

PHOTOVOLTAIC SUPPORT STRUCTURES

THE ULTIMATE GUARDIAN IS THE SUPREME SOLAR PC ON THE MARKET WITH OVER 15,000,000 COMBINATIONS & CALCULATIONS RUN!

PC OWNERSHIP

4 STEL ENGINEERING

26030 ACERO
MISSION VIEJO, CA 92691

PHONE: (949) 305-1150
FAX: (949) 305-1420

STRUCTURAL ENGINEER OF RECORD:
DUSTIN K. ROSEPINK, S5885

POINT OF CONTACT:
GARY MILLS, DIRECTOR OF ENGINEERING

M BAR C CONSTRUCTION INC.

1770 LA COSTA MEADOWS DR.
SAN MARCOS, CA 92078

LIC # 869960
B AND C51

POINT OF CONTACT:
ERIK KRIVOKOPICH

PHONE: (760) 744-4131
FAX: (760) 744-4449

STANDARD NOTES FOR PC USE

- 4 S.T.E.L. ENGINEERING, INC. SHALL ALWAYS BE GIVEN THE OPPORTUNITY TO BID THE DSA SUBMITTAL PACKAGE (I.E. TO ACT AS THE DESIGN PROFESSIONAL IN GENERAL RESPONSIBLE CHARGE).
- 4 S.T.E.L. ENGINEERING, INC. SHALL ALWAYS BE THE SEOR FOR ALL PROJECTS UTILIZING THE PC, NO OTHER FIRM IS ALLOWED TO PERFORM THIS SERVICE WITH THIS PC.
- M BAR C CONSTRUCTION, INC. SHALL ALWAYS BE THE STEEL CONTRACTOR FOR THE STEEL CANOPIES (PURLINS, BEAMS, COLUMNS, FOUNDATIONS, AND ASSOCIATED CONNECTIONS). NO OTHER CONTRACTOR IS ALLOWED TO PERFORM THIS SCOPE OF WORK WITH THIS PC.
- FOR CONSTRUCTION COST INFORMATION, CONTACT M BAR C CONSTRUCTION, INC.
- CUSTOM SIZES AND LOADING REQUIRE SUPPLEMENTARY SHOP DRAWINGS AND CALCULATIONS.

LEGAL NOTES

- USE OF PC WITHOUT WRITTEN CONSENT FROM 4 S.T.E.L. ENGINEERING, INC. AND/OR M BAR C CONSTRUCTION, INC. IS STRICTLY PROHIBITED.
- ALL INFORMATION HEREIN IS PROPRIETARY INFORMATION AND UNDER THE OWNERSHIP OF 4 S.T.E.L. ENGINEERING, INC & M BAR C CONSTRUCTION, INC.
- ALL INFORMATION COPYRIGHT 2009, 2011 & 2014.

DESIGN PARAMETER CHECK LIST

1. REFER TO SHEET S-2 FOR 'DESIGN CHECK LIST' AND 'SITE SPECIFIC PARAMETERS'.
2. WHEN A SITE-SPECIFIC PROJECT IS LOCATED IN A FLOOD ZONE OTHER THAN ZONE X, A LETTER STAMPED FROM A GEOTECHNICAL ENGINEER IS REQUIRED IS NEEDED TO VALIDATE THE ALLOWABLE SOIL VALUES SPECIFIED IN THE PC DRAWINGS ARE STILL APPLICABLE. UNLESS THE BOTTOMS OF FOUNDATIONS ARE RAISED ABOVE THE DESIGN FLOOD ELEVATION, A VALIDATION LETTER FROM THE GEOTECHNICAL ENGINEER SHALL BE PROVIDED, EVEN IF THE PRESUMPTIVE LOAD BEARING VALUES PER CBC SECTION 1806A.2 ARE USED.
   EXCEPTION: WHEN A SITE-SPECIFIC PROJECT IS LOCATED IN A FLOOD ZONE D (UNDEFINED) AND THE APPLICANT PROVIDES EVIDENCE FROM THE LOCAL JURISDICTION OR A QUALIFIED DESIGN PROFESSIONAL CONFIRMING THE SITE IS NOT IN A FLOOD HAZARD ZONE.
3. WET STAMPED & SIGNED COPIES OF PC PLANS ARE NOT REQUIRED FOR SITE SPECIFIC PC USE.
4. CHANGES TO PC DOCUMENTS ARE GOVERNED BY DSA PL 07-02, SECTION 5. INCONSEQUENTIAL CHANGES MAY BE MADE TO THE EXTENT THAT THEY CAN BE REVIEWED WITHIN THE TWO-HOUR OTC TIME FRAME. CHANGES TO CODE-REGULATED ASPECTS TO PC DOCUMENTS ARE NOT PERMITTED AND SHALL BE SUBMITTED AND REVIEWED THROUGH THE REGULAR PLAN REVIEW PROCESS.
5. THE SITE SPECIFIC DESIGN PROFESSIONAL IN GENERAL RESPONSIBLE CHARGE IS RESPONSIBLE FOR ENSURING ALL INFORMATION SHOWN IN THE DESIGN PARAMETER CHECKLIST ARE MET AND PROVIDED AT THE TIME OF DSA SUBMITTAL.
6. THE SITE SPECIFIC DESIGN PROFESSIONAL IS RESPONSIBLE FOR OBTAINING A STATEMENT FROM THE PC DESIGN PROFESSIONAL REGARDING THE SOLAR PANEL ADEQUACY. SEE NOTES 12 AND 13 OF THE SOLAR PANEL AND SOLAR PANEL CONNECTION NOTES ON S-3 FOR INFORMATION REGARDING OBTAINING THIS STATEMENT.
7. THE SITE SPECIFIC DESIGN PROFESSIONAL IN GENERAL RESPONSIBLE CHARGE IS RESPONSIBLE FOR ENSURING 4 S.T.E.L. ENGINEERING, INC. HAS BEEN PROPERLY CONTRACTED TO PERFORM THE ROLE AS SEOR. NO OTHER FIRM SHALL PERFORM THE SEOR ROLE. 4 S.T.E.L. ENGINEERING, INC./DUSTIN ROSEPINK SHALL ONLY ACT AS THE SEOR IF PROPERLY CONTRACTED.
8. 4 S.T.E.L. ENGINEERING, INC./DUSTIN ROSEPINK WILL NOT SIGN ANY DSA FORMS (I.E. DSA-5, DSA-6, ETC.), REVIEW OR APPROVE ANY SUBMITTALS (I.E. GEOTECHNICAL REPORTS, CONCRETE MIX DESIGNS, SHOP DRAWINGS, ETC.) FOR THE SITE SPECIFIC PROJECT UNLESS HE IS ACTING AS THE DESIGN PROFESSIONAL IN GENERAL RESPONSIBLE CHARGE OR THE SITE SPECIFIC STRUCTURAL ENGINEER OF RECORD PER NOTE 3 ABOVE.

SHEET INDEX

- [x] S-1 ..... COVER SHEET 1
- [x] S-2 ..... COVER SHEET 2
- [x] S-3 ..... GENERAL NOTES
- [x] S-4 ..... SAMPLE DSA-103 FORMS
- [x] S-5 ..... SECTION PROPERTIES & REBAR DETAILS
- [x] S-6 ..... T-STRUCTURE FRAMING PLAN & ELEVATIONS
- [x] S-7 ..... T-STRUCTURE BEAM/COLUMN SCHEDULE
- [x] S-8 ..... T-STRUCTURE PIER FOUNDATION SCHEDULE
- [ ] S-9 ..... ~~T-STRUCTURE SPREAD FOOTING SCHEDULE~~
- [x] S-10 ..... T-STRUCTURE BEAM-TO-COLUMN SCHEDULE
- [ ] S-11 ..... ~~OT-STRUCTURE FRAMING PLAN & ELEVATIONS~~
- [ ] S-12 ..... ~~OT-STRUCTURE BEAM/COLUMN SCHEDULE~~
- [ ] S-13 ..... ~~OT-STRUCTURE PIER FOUNDATION SCHEDULE~~
- [ ] S-14 ..... ~~OT-STRUCTURE SPREAD FOOTING SCHEDULE~~
- [ ] S-15 ..... ~~OT-STRUCTURE BEAM-TO-COLUMN SCHEDULE~~
- [x] S-16 ..... PURLIN SCHEDULE
- [x] S-17 ..... TYPICAL PURLIN DETAILS
- [x] S-18 ..... TYPICAL SOLAR PANEL DETAILS
- [x] S-19 ..... BEAM BRACING & MISC. DETAILS
- [x] S-20 ..... EQUIPMENT COLUMN CONNECTIONS
- [x] S-21 ..... FOUNDATION MISC. DETAILS
- [ ] S-22 ..... ~~OPTIONAL DETAILS~~
- [x] S-23 ..... EQUIPMENT PAD DETAILS
- [x] S-24 ..... UNISTRUT BRACED EQUIPMENT RACK 1
- [x] S-25 ..... HSS STEEL EQUIPMENT RACK 2
- [x] S-26 ..... UNISTRUT EQUIPMENT RACK 3
- [x] S-27 ..... WALL MOUNTED EQUIPMENT DETAILS
- [ ] S-28 ..... ~~EQUIPMENT PAD ENCLOSURE~~
- [ ] S-29 ..... ~~EQUIPMENT PAD ENCLOSURE DETAILS~~
- [ ] S-30 ..... ~~PERIMETER FENCE DETAILS~~

30 SHEETS

IDENTIFICATION STAMP
DIV. OF THE STATE ARCHITECT
APP: 03-125900 INC:
REVIEWED FOR
SS ☑ FLS ☑ ACS ☑
DATE: 03/18/2026

4 STEL ENGINEERING
26030 ACERO
MISSION VIEJO, CA 92691
949.305.1150 | FAX 949.305.1420

M BAR C CONSTRUCTION INC.
1770 LA COSTA MEADOWS DRIVE SAN MARCOS, CA 92078 ERIK KRIVOKOPICH
PHONE: (760) 744-4131 FAX: (760) 744-4449 ERIK@MBARCONLINE.COM
LIC # 869960 B AND C51 (770) 707-8845

ENGINEER'S APPROVAL
REGISTERED PROFESSIONAL ENGINEER DUSTIN K. ROSEPINK S 5885 STATE OF CALIFORNIA

BID INFORMATION
THE STRUCTURES AND DESIGNS IN THIS PC ARE PROPRIETARY TO M BAR C CONSTRUCTION, INC. AND 4 S.T.E.L. ENGINEERING, INC. ALL SITES USING THIS PC: M BAR C CONSTRUCTION, INC. SHALL BE THE STEEL CONTRACTOR & 4 S.T.E.L. ENGINEERING, INC. SHALL BE THE SEOR. SEE THE STANDARD NOTES FOR PC USE ON S-1 FOR ADDITIONAL REQUIREMENTS.

PRE-CHECK (PC) DOCUMENT
CODE: 2022 CBC
A SEPARATE PROJECT APPLICATION FOR CONSTRUCTION IS REQUIRED

APPROVED
DIV. OF THE STATE ARCHITECT
APP: 04-123955 PC
REVIEWED FOR
SS ☑ FLS ☑ ACS ☑ CG ☐
DATE: 10/14/2024

SITE SPECIFIC INFORMATION
ALTADENA ELEMENTARY SCHOOL
743 E CALAVERAS ST.
ALTADENA, CA 91001

REVISIONS

MARK	DATE	DESCRIPTION

4 STEL JOB #	MC02-V3-6
DATE	10-03-24
DRAWN BY	GM
CHECKED	RWS

UG 22.6.1

COVER SHEET 1

S-1

DRAWINGS, SPECIFICATIONS AND OTHER DOCUMENTS, PREPARED BY THE DESIGN PROFESSIONAL (DP) AND THE DP'S CONSULTANTS ARE INSTRUMENTS OF SERVICE FOR USE SOLELY WITH RESPECT TO THIS PROJECT. THIS INCLUDES DOCUMENTS IN ELECTRONIC FORM. THE DP AND THE DP'S CONSULTANTS SHALL BE DEEMED THE AUTHORS AND OWNERS OF THEIR RESPECTIVE INSTRUMENTS OF SERVICE AND SHALL RETAIN ALL COMMON LAW, STATUTORY AND OTHER RESERVED RIGHTS, INCLUDING COPYRIGHTS. THE INSTRUMENTS OF SERVICE SHALL NOT BE USED BY THE OWNER FOR FUTURE ADDITIONS OR ALTERATIONS TO THIS PROJECT OR FOR OTHER PROJECTS, WITHOUT THE PRIOR WRITTEN AGREEMENT OF THE DP. ANY UNAUTHORIZED USE OF THE INSTRUMENTS OF SERVICE SHALL BE AT THE OWNER'S SOLE RISK AND WITHOUT LIABILITY TO THE DP AND THE DP'S CONSULTANTS.

NOTE: IF DWG. IS NOT 24 x 36, IT IS NOT FULL SIZE

DESIGN CHECK LIST

INSTRUCTIONS:
DESIGN PROFESSIONAL SHALL ENSURE ADEQUACY OF PC DESIGN AND PLAN PREPARATION BY VERIFYING THAT ALL THE APPLICABLE CHECKLIST ITEMS BELOW HAVE BEEN PROPERLY EVALUATED/EXECUTED.

SUBMISSION IS FOR: ☐ OTC ☒ REGULAR SUBMITTAL

SEOR

- ☒ ALLOWABLE LATERAL PRESSURE OF SOIL AT PROJECT SITE LIMITS GROUND-LEVEL LATERAL DISPLACEMENT OF THE STRUCTURE TO A MAXIMUM OF 1/2"
- ☒ SITE SPECIFIC GEOTECHNICAL REPORT HAS BEEN PROVIDED WITH A GEOHAZARD SECTION INCLUDED.
- ☒ VERIFY THE SITE PLAN SOLAR PANEL LAYOUT IS PROVIDED WITH AREA THAT DOES NOT EXCEED THE PC MAXIMUM.
- ☒ VERIFY IF CGS APPROVAL OF GEOTECHNICAL REPORT REQUIRED BECAUSE INDIVIDUAL PC STRUCTURES EXCEED 4000 SQ FT OR SITE IS LOCATED IN A STATE OR LOCAL GEOHAZARD ZONE. STRUCTURES MAY BE BROKEN UP INTO MULTIPLE 4,000 SQ FT STRUCTURES WITH SEISMIC BREAKS PER STRUCTURAL DATA ON S-2.
- ☒ SOLAR PANEL + NON STRUCTURAL ITEMS < 3.15 PSF
- ☒ S-2: VERIFY THE SITE PLANS PLANS UTILIZE A RISK CATEGORY II STRUCTURE.
- ☒ S-2: VERIFY APPROPRIATE SEISMIC SEPARATION PER 'STRUCTURAL DATA'.
- ☒ S-2: VERIFY THAT TABLES IN 'SITE SPECIFIC PARAMETERS' SECTION HAVE BEEN COMPLETED
- ☒ S-3: VERIFY THAT DESIGN PROFESSIONAL STATEMENT REGARDING SOLAR PANEL MEETING PC CRITERIA PER HAS BEEN PROVIDED PER NOTE 15 WITHIN "PV PANEL AND PV PANEL FASTENER INSTALLATION PROCEDURE"
- ☒ S-3: VERIFY THAT OPTIONS FOR CONCRETE DURABILTY BASED ON EXPOSURE CLASS AND THE FOUNDATION SOILS CLASS HAVE BEEN SELECTED.
- ☒ S-3: VERIFY THE SITE SPECIFIC FOUNDATION LOCATIONS MEET WITH NOTE 10 ON S-3 IN THE SOILS NOTES SECTION FOR SET BACK FROM TOP OF SLOPES, OR THAT THE GEOTECHNICAL REPORT HAS ALLOWED A SMALLER DISTANCE.
- ☒ S-5: VERIFY THAT COLD FORMED SECTIONS AND HOT ROLLED SECTIONS HAVE BEEN SELECTED BASED ON THE SITE SPECIFIC PC ID'S UTILIZED ON SHEETS S-7, S-12, AND S-16.
- ☒ S-6: FOR T STRUCTURE, VERIFY WHETHER CANTILEVER MID-SPAN BLOCKING / BRACING REQUIRED PER S-16.
- ☒ S-6: FOR T STRUCTURE, VERIFY 2' MAXIMUM DIFFERENCE IN COLUMN HEIGHTS WITHIN A STRUCTURE.
- ☒ S-6: SELECT APPLICABLE FRAMING, BOLLARD, AND FOUNDATION OPTIONS.
- ☒ S-7: VERIFY T PC ID SELECTION MATCHES SITE SPECIFIC LAYOUT. VERIFY IF MULTI SPAN PURLIN HAS BEEN SELECTED FOR NOTE 3 IF APPLICABLE.
- ☒ S-8: VERIFY T PC ID FOUNDATION SELECTION MATCHES SITE SPECIFIC LAYOUT AND THAT SOILS CLASS SELECTION MATCHES S-3. VERIFY THAT SPIRAL TIE LENGTH AND SPACINGS HAVE BEEN SELECTED IN DETAIL 2. VERIFY IF STEEL CASING REQUIRED IN DETAIL 2. VERIFY IF NON-STRUCTURAL BOLLARD IS REQUIRED PER DETAIL 3.
- ☐ S-9: VERIFY T SPREAD FOOTING PC ID SELECTION MATCHES SITE SPECIFIC LAYOUT. VERIFY IF NON-STRUCTURAL BOLLARD IS REQUIRED PER DETAIL 2.
- ☒ S-10: VERIFY T BEAM TO COLUMN PC ID SELECTION MATCHES SITE SPECIFIC LAYOUT.
- ☐ S-11: FOR OT STRUCTURE, VERIFY WHETHER CANTILEVER MID-SPAN BLOCKING / BRACING REQUIRED PER S-16.
- ☐ S-11: FOR OT STRUCTURE, VERIFY 2' MAXIMUM DIFFERENCE IN COLUMN HEIGHTS WITHIN A STRUCTURE.
- ☐ S-11: SELECT APPLICABLE FRAMING, BOLLARD, AND FOUNDATION OPTIONS.
- ☐ S-12: VERIFY OT PC ID SELECTION MATCHES SITE SPECIFIC LAYOUT. VERIFY IF MULTI SPAN PURLIN HAS BEEN SELECTED FOR NOTE 3 IF APPLICABLE.
- ☐ S-13: VERIFY OT PC ID FOUNDATION SELECTION MATCHES SITE SPECIFIC LAYOUT AND THAT SOILS CLASS SELECTION MATCHES S-3. VERIFY THAT SPIRAL TIE LENGTH AND SPACINGS HAVE BEEN SELECTED IN DETAIL 2. VERIFY IF STEEL CASING REQUIRED IN DETAIL 2. VERIFY IF NON-STRUCTURAL BOLLARD IS REQUIRED PER DETAIL 3.
- ☐ S-14: VERIFY OT SPREAD FOOTING PC ID SELECTION MATCHES SITE SPECIFIC LAYOUT. VERIFY IF NON-STRUCTURAL BOLLARD IS REQUIRED PER DETAIL 2.
- ☐ S-15: VERIFY OT BEAM TO COLUMN PC ID SELECTION MATCHES SITE SPECIFIC LAYOUT.
- ☒ S-16: VERIFY PURLIN ID SELECTION MATCHES SITE SPECIFIC LAYOUT. VERIFY IF THE PURLIN CANTILEVER SCHEDULE SHOWS THAT THE T OR OT PC ID FOR THE ARRAY END COLUMNS NEED TO BE INCREASED DUE TO THE SITE SPECIFIC CANTLIEVER EXCEEDING THE MAX CANTILEVER LENGTH SHOWN. VERIFY THAT THE PURLIN BRACE AND SPLICE DETAILS HAVE BEEN SELECTED AND MATCH THE INFORMATION FROM THE SELECTION FOR THE PURLIN ID.
- ☒ S-17: VERIFY THAT THE PURLIN BRACE AND SPLICE DETAILS HAVE BEEN SELECTED AND MATCH THE INFORMATION FROM THE SELECTION FOR THE PURLIN ID ON S-16.
- ☒ S-18: VERIFY PURLIN LAYOUT AND BOLTING OPTIONS HAVE BEEN SELECTED. VERIFY SOLAR PANEL LAYOUT OPTIONS SELECED MATCH SITE SPECIFIC PLANS. VERIFY PV MODULE MOUNTING BOLT SIZE SELECTED MATCHES REQUIRED PV/ MODULE MOUNTING BOLT SIZE SPECIFIED IN THE PV MODULE INSTALLATION MANUAL. VERIFY WHETHER ANY GROUNDING/BONDING OPTIONS HAVE BEEN SELECTED.
- ☒ S-20: IF SHEET IS PRESENT, VERIFY THAT COLUMN MOUNTED EQUIPMENT SELECTIONS MATCH SITE SPECIFIC PLANS.
- ☒ S-21: VERIFY OPTIONAL BOLLARD SELECTIONS MATCH SITE SPECIFIC PLANS. VERIFY FOUNDATION OPTIONS FOR CONDUIT ROUTING MATCH SITE SPECIFIC PLANS.
- ☐ S-23: IF SHEET IS PRESENT, VERIFY THAT EQUIPMENT PAD AND RACK SELECTIONS MATCH SITE SPECIFIC PLANS.
- ☐ S-23: IF SHEET IS PRESENT AND BATTERY/BESS EQUIPMENT ITEM 19 SELECTED, VERIFY THAT ALL SITE SPECIFIC DRAWING REQUIREMENTS HAVE BEEN PROVIDED PER NOTE 14 ON DETAIL 1.
- ☐ S-29: IF SHEET IS PRESENT, VERIFY THAT ENCLOSURE OPTIONS HAVE BEEN SELECTED.
- ☐ S-30: IF SHEET IS PRESENT, VERIFY THAT FENCING OPTIONS HAVE BEEN SELECTED.

SITE SPECIFIC PARAMETERS

INSTRUCTIONS:
DESIGN PROFESSIONAL SHALL CHECK THE APPROPRIATE SELECTION BOXES BELOW AND ENTER THE DESIGN PARAMETERS APPLICABLE TO THE SPECIFIC PROJECT SITE.

SNOW
☐ 0 psf | pg = _____ psf; pf = _____ psf; Ce = _____ | ☒ 5 psf | ☐ 20 psf

WIND
V = 101 mph < = 110 mph
Kzt = 1.00 ≤ 1
EXPOSURE: ☒ C ☐ D

SEISMIC
☒ DESIGN BASED ON SITE CLASS DETERMINED PER CHAPTER 20 OF ASCE 7-16
GEOTECHICAL INVESTIGATION PROVIDED
SITE CLASS: ☐ C ☒ D ☐ E
S_s = 2.19 Fa = 1.0 PER ASCE 7-16 SUPPL 3, TABLE 11.4-1

☐ DESIGN BASED ON SITE SPECIFIC GROUND MOTION HAZARD ANALYSIS
PER CHAPTER 21 OF ASCE 7-16
SHORT-PERIOD DESIGN SPECTRAL RESPONSE PARAMETER, S_{DS}, SHALL BE AS SPECIFIED IN GEOTECHNICAL INVESTIGATION
CGS APPROVAL REQUIRED
NOT ELIGIBLE FOR OTC REVIEW
SITE CLASS: ☐ C ☐ D ☐ E

S_{DS} = $^2/_3$ Fa. S_s = 1.56 ≤ 1.867
C_s = S_{DS} x I$_e$ / R = ≤ 1.493 USED IN DESIGN
SEISMIC DESIGN CATEGORY: ☒ D ☐ E

SEOR

☒	STRUCTURE WIDTH < = 43 FT
☒	SOLAR PANEL: REC ALPHA PRO M , WEIGHT 71.6 LBS
☐	SOLAR PANEL DIMENSIONS 85.6 IN. x 49.7 IN. = 30.55 ft^2 < = ~~28.13~~ ft^2 — 33.36 ft^2 FOR 101 MPH SITE SPECIFIC WIND SPEED
☒	SOLAR PANEL ALLOWABLE STRENGTH WIND UPWARD PRESSURE (ASD) 33.4 PSF IS > = 29.7 PSF
☒	SOLAR PANEL ALLOWABLE STRENGTH WIND DOWNWARD PRESSURE (ASD) 33.4 PSF IS > = 32.4 PSF
☐	SOLAR PANEL ALLOWABLE STRENGTH WIND DOWNWARD PRESSURE (ASD) + 5PSF SNOW ___ PSF IS > = 27.9 PSF
☐	SOLAR PANEL ALLOWABLE STRENGTH WIND DOWNWARD PRESSURE (ASD) + 20PSF SNOW ___ PSF IS > = 36.4 PSF

REGISTERED PROFESSIONAL ENGINEER DUSTIN K. ROSENTHAL S 5885 CIVIL STATE OF CALIFORNIA

MAXIMUM DESIGN PARAMETERS

RISK CATEGORY:.....II
ROOF LIVE LOAD (L_r):
WITH SOLAR PANELS INSTALLED:.....12 psf (PER IR 16-8. REVISED 03/03/2021)
OPEN TRELLIS SYSTEM:.....12 psf (PER IR 16-8. REVISED 03/03/2021)
POINT LOAD:.....300 lb (PER IR 16-8. REVISED 03/03/2021)
MAX. ROOF SNOW LOAD (S):.....0 PSF, 5 psf, 20 psf (VARIES - PER STRUCTURE SELECTED)

MAX. DEAD LOAD:
SOLAR PANEL/RACKING/ELEC.....3.15 psf

WIND: DIRECTIONAL PROCEDURE
BASIC WIND SPEED.....110 mph (3 SECOND GUST) (SEE NOTES BELOW) [1]
WIND EXPOSURE:.....C[1]
INTERNAL PRESSURE:.....N/A (OPEN STRUCTURE)
.....K_a=0.85
.....K_z=0.88, 0.925 (SEE NOTES BELOW) [1]
.....K_{zt}=1.00

SNOW:
GROUND SNOW, p_g = 0 psf, 5 psf, 20.0 psf
C_e = 0.9
C_t = 1.2
I = 1.0
C_s = 1.0
p_s = 0.7.C_e.C_t.I.p_g.C_s = 0 psf, 5 psf, 20.0 psf
ROOF SNOW, p_f = 0 psf, 5 psf, 20.0 psf
$p_{S.E}$ = 0.0 psf

SEISMIC:
BASE:.....FROM USABLE SOIL HT. PER GEOTECHNICAL REPORT
SEISMIC IMPORTANCE FACTOR:.....I_e = 1.0
SITE CLASS:.....E [3]
SHORT SPECTRAL RESPONSE:.....S_{DS} = 1.867 [2]
RESPONSE MODIFICATION FACTOR:..... R = 1.25
SEISMIC RESPONSE COEFFICIENT:.....C_s = 1.493 [2]
SEISMIC REDUNDANCY FACTOR:.....ρ = 1.3
..... ρC_s= 1.941

DESIGN BASE SHEAR: (LRFD)
T-STRUCTURES:..... 18,700 [2] lb MAX. (VARIES - PER STRUCTURE SELECTED)
OFFSET T-STRUCTURES:..... 13,876 [2] lb MAX. (VARIES - PER STRUCTURE SELECTED)

SEISMIC DESIGN CATEGORY:..... E
SEISMIC FORCE RESISTING SYSTEM:.....ORDINARY STEEL CANTILEVERED COLUMN
ANALYSIS PROCEDURE:..... EQUIVALENT LATERAL FORCE

NOTES:

1. THIS PC'S WIND FORCE RESISTING SYSTEM IS DESIGNED TO ONE WIND CRITERIA.
110 mph EXPOSURE C WITH q_h = 24.3 psf MAX.
EACH CRITERIA IS DESIGNED WITH THE K_e, K_d, AND K_{zt} PER THE ABOVE. THIS PC MAY BE USED IN ANY LOCATION WITH ANY WIND SPEED AND VALUES OF K_z, K_e, AND K_d SUCH THAT THE RESULTING q_h FOR THE SITE DOES NOT EXCEED 24.3 psf. THE DESIGN PROFESSIONAL IN GENERAL RESPONSIBLE CHARGE IS RESPONSIBLE FOR ENSURING THE WIND CRITERIA SELECTED HAS A HIGHER q_h THAN THE SITE SPECIFIC q_h.

2. THIS PC'S SEISMIC FORCE RESISTING SYSTEM IS DESIGNED TO ONE SEISMIC CRITERIA.
S_{DS} = 1.867 WITH R = 1.25 AND ρC_s = S_{DS}/R = 1.867/1.25 = 1.493 x (1.3)=1.941.
THIS PC MAY BE USED IN ANY LOCATION WITH SUCH THAT THE RESULTING C_s USING THE APPROPRIATE R VALUE DOES NOT EXCEED THE DESIGN CRITERIA C_s VALUES. THE DESIGN PROFESSIONAL IN GENERAL RESPONSIBLE CHARGE IS RESPONSIBLE FOR ENSURING THE C_s CRITERIA SELECTED HAS A HIGHER C_s THAN THE SITE SPECIFIC C_s. S_{DS} VALUE TO BE CONFIRMED BY THE GEOTECHNICAL REPORT AND CLEARLY IDENTIFIED ON THE CONSTRUCTION DRAWINGS.

3. THIS PC IS EXEMPTED FROM SITE-SPECIFIC GROUND MOTION HAZARD ANALYSIS REQUIREMENTS OF ASCE 7 SECTION 11.4.8. THIS PC IS DESIGNED USING THE EQUIVALENT LATERAL FORCE PROCEDURE AND A SEISMIC RESPONSE COEFFICIENT BASED ON THE SHORT PERIOD DESIGN SPECTRAL RESPONSE ACCELERATION, SDS.
FOR SITE CLASS 'D', THE INCREASE IN THE SM1 PARAMETER PRESCRIBED IN THE EXCEPTION TO ASCE 7 SEC 11.4.8, ITEM 1, DOES NOT IMPACT THE DESIGN OF THE STRUCTURE.
FOR SITE CLASS 'E'; THE STRUCTURE COMPLIES WITH THE EXCEPTION 1 CONDITIONS OF ASCE 7 SECTION 11.4.8, ITEM 2.

BUILDING DATA

TYPE OF CONSTRUCTION..... II B
OCCUPANCY..... VARIES - SEE EXAMPLES BELOW
NUMBER OF STORIES.....1
BUILDING AREAS..... VARIES DUE TO OCCUPANCY - SEE EXAMPLES BELOW
MODULE SIZES..... VARIES WITH OPTIONS
BUILDING LENGTH:
ALL WIDTHS..... MAX. 500'-0" LENGTH
NOTE: NO SEISMIC AND/OR THERMAL EXPANSION JOINTS REQUIRED ALONG THE LENGTH OF THE STRUCTURES. (ALL JOINTS ARE INTERNAL)

OCCUPANCY AND BUILDING AREA EXAMPLES:
ALL STRUCTURES SHALL BE BASED ON RISK CATEGORY II STRUCTURE.
~~OCCUPANCY A:~~
~~EXAMPLE 1:~~
~~STRUCTURES LOCATED OVER LUNCH AREA WITHOUT FIXED SEATING:~~
~~OCCUPANCY: A-2:~~
~~OCCUPANCY LOAD: 15 ft^2/person - MAX 300 PERSONS FOR RISK II:~~
~~MAX SQ FT: 4,500 ft^2:~~
~~EXAMPLE 2:~~
~~STRUCTURES LOCATED OVER LUNCH AREA WITH FIXED SEATING:~~
~~OCCUPANCY: A-2:~~
~~OCCUPANCY LOAD: 18 in/person ALONG LINEAR BENCH:~~
~~MAX 300 PERSONS FOR RISK II:~~
~~MAX SQ FT: 5,400 LINEAR INCHES OF FIXED SEATING UNDER THE STRUCTURE:~~
~~EXAMPLE 3:~~
~~STRUCTURES LOCATED OVER AN AREA DESIGNATED FOR ASSEMBLY (TYPICALLY AMPHITHEATER, OR OTHER SPACE WITH FIXED SEATING OR DESIGNATED AS A STANDING ASSEMBLY AREA):~~
~~OCCUPANCY: A:~~
~~OCCUPANCY LOAD: 7 ft^2/person - MAX 300 PERSONS FOR RISK II:~~
~~MAX SQ FT: 2,100 ft^2:~~
~~SHADE STRUCTURE:~~
~~EXAMPLE 1:~~
~~STRUCTURES LOCATED OVER A FIELD, BLACKTOP, PLAYGROUND EQUIPMENT, OR OTHER NON-DESIGNATED USE SPACES:~~
~~OCCUPANCY: C:~~
~~OCCUPANCY LOAD: 20 ft^2/person - MAX 250 PERSONS FOR RISK II:~~
~~MAX SQ FT: 5,000 ft^2:~~

PARKING
EXAMPLE 1:
STRUCTURES LOCATED OVER PARKING
OCCUPANCY: S-2
OCCUPANCY LOAD: 200 ft^2/person
MAX SQ FT: UNLIMITED PER CBC 406.5.4 AND 406.5.5

GENERAL NOTES

1. ALL WORK SHALL CONFORM TO TITLE 24, CALIFORNIA CODE OF REGULATIONS (CCR).
2. CHANGES TO THE APPROVED DRAWINGS AND SPECIFICATIONS SHALL BE MADE BY ADDENDA OR CONSTRUCTION CHANGE DOCUMENTS APPROVED BY THE DIVISION OF THE STATE ARCHITECT, AS REQUIRED BY SECTION 4-338, PART 1, TITLE 24, CCR.
3. A 'DSA CERTIFIED' PROJECT INSPECTOR EMPLOYED BY THE DISTRICT (OWNER) AND APPROVED BY THE DIVISION OF THE STATE ARCHITECT SHALL PROVIDE CONTINUOUS INSPECTION OF THE WORK. THE DUTIES OF THE INSPECTOR ARE DEFINED IN SECTION 4-342, CALIFORNIA BUILDING STANDARDS ADMINISTRATIVE CODE (PART 1, TITLE 24, CCR).
4. A 'DSA CERTIFIED' INSPECTOR WITH CLASS 2 CERTIFICATION IS REQUIRED FOR THIS PROJECT.
5. A 'DSA CERTIFIED' INSPECTOR WHO IS SPECIFICALLY QUALIFIED IN MECHANICAL AND ELECTRICAL WORK WILL BE REQUIRED FOR THIS PROJECT.
6. A DSA ACCEPTED TESTING LABORATORY DIRECTLY EMPLOYED BY THE SCHOOL BOARD SHALL CONDUCT ALL THE REQUIRED TESTS AND INSPECTIONS FOR THE PROJECT.
7. GRADING PLANS, DRAINAGE IMPROVEMENTS, ROAD AND ACCESS REQUIREMENTS AND ENVIRONMENTAL HEALTH CONSIDERATIONS SHALL COMPLY WITH ALL LOCAL ORDINANCES.
8. IF THE PROJECT IS DIVIDED INTO INCREMENTS: THE SCOPE OF WORK FOR EACH INCREMENT MUST BE CLEARLY SPECIFIED ON THE TITLE SHEET OF ALL INCREMENTS SUBMITTED.
9. DESIGN PER 2022 CBC AND ITS PRESCRIBED LOADING AND MATERIAL SPECIFICATIONS:
   - ASCE 7-16
   - ASCE 19-16
   - 15TH EDITION AISC STEEL MANUAL
   - AISI S100-16(2020) W/S2-20 COLD-FORMED STEEL STRUCTURAL MEMBERS, WITH SUPP. 2, 2020 EDITION
   - ACI 318-19
10. THESE STRUCTURES ARE NOT DESIGNED TO BE, NOR SHALL THEY BE, ENCLOSED.
11. ALL DIMENSIONS, CONDITIONS, AND ELEVATIONS ARE TO BE FIELD VERIFIED BY THE CONTRACTOR PRIOR TO COMMENCING WORK OR FABRICATION. IF ANY DISCREPANCIES ARE FOUND OR IF ANY CONDITION EXISTS NOT AS SHOWN ON THE DRAWINGS THE DESIGN PROFESSIONAL IN RESPONSIBLE CHARGE SHALL BE NOTIFIED IMMEDIATELY.
12. IF A SNOW LOAD OPTION IS USED THEN THE SITE-SPECIFIC MAX. ROOF SNOW LOADING INCLUDING DRIFT MUST BE LESS THAN OR EQUAL TO THE PSF OF SNOW LOAD SELECTED FOR THE SITE USE (5 OR 20 PSF).
13. NO FUTURE STRUCTURAL ROOF DECK OR SHEATHING MAY BE APPLIED TO THE OPEN GRID.
14. THE ALLOWABLE MAXIMUM PSF ALLOWED FOR THE SOLAR PANEL, ELECTRICAL, AND OTHER NON-STRUCTURAL ITEMS IS 3.15 PSF.
15. ALL SCREWS TO BE ITW BUILDEX TEK SCREWS PER ICC ESR-1976 OR ELCO DRILL SCREW PER ICC ESR-3294.
16. ALL UNISTRUT PARTS & CALLOUTS MAY BE SUBSTITUTED BY OTHER MANUFACTURERS W/ EQUIVALENT STRENGTH.

FIRE LIFE SAFETY

AUTOMATIC FIRE SPRINKLERS REQUIRED? (Y/N).....N

1. FOR ALL CANOPY ARRAYS - VERIFY COMPLIANCE W/ CFC 503.2.1
NEW FIRE APPARATUS ACCESS ROADS SHALL HAVE AN UNOBSTRUCTED WIDTH OF NOT LESS THAN 20 FEET, EXCLUSIVE OF SHOULDERS, EXCEPT FOR APPROVED SECURITY GATES IN ACCORDANCE WITH SECTION 503.6, AND AN UNOBSTRUCTED VERTICAL CLEARANCE OF NOT LESS THAN 13 FEET 6 INCHES
2. ALL GROUNDING SHALL BE IN ACCORDANCE WITH CEC ART. 250

ACCESS

1. CONCRETE BOLLARD ABOVE FOUNDATIONS (RAISED PIERS) CANNOT BE LOCATED IN ACCESSIBLE PARKING SPACES OR ACCESS AISLES.
2. SLOPED PORTIONS OF FOUNDATIONS, WHEN LOCATED IN ACCESSIBLE PARKING STALL OR ACCESS AISLE, MUST HAVE A SLOPE LESS THAN OR EQUAL TO 2.08%
3. MINIMUM ARRAY CLEAR HEIGHTS IN ACCESSIBLE AREAS:
8'-2" - WHEN LOCATED OVER ACCESSIBLE PARKING OR ACCESS AISLES
9'-6" - WHEN LOCATED OVER ACCESSIBLE PASSENGER LOADING ZONES

BID INFORMATION

THE STEEL STRUCTURES IN THIS PC ARE PROPRIETARY TO M BAR C CONSTRUCTION, INC. AND 4 S.T.E.L. ENGINEERING, INC. THE STEEL WORK SHALL NOT GO OUT TO BID.

PRE-CHECK (PC) DOCUMENT

CODE: 2022 CBC

A SEPARATE PROJECT APPLICATION FOR CONSTRUCTION IS REQUIRED

STRUCTURAL DATA

LATERAL RESISTING SYSTEM..... CANTILEVERED COLUMN
FOUNDATION..... PIER AND SPREAD FOOTING
MINIMUM REQUIRED SEISMIC SEPARATION..... 10"
TESTING AND INSPECTION LIST..... SEE SHEETS S-3 & S-4
DESIGNED TO SUPPORT FIRE SPRINKLERS.....NO

CODES

GOVERNING CODES:

CALIFORNIA CODE OF REGULATIONS:
2025
~~2022~~ CALIFORNIA ADMINISTRATIVE CODE, PART 1, TITLE 24 C.C.R.
2022 CALIFORNIA BUILDING CODE (CBC), PART 2, TITLE 24 C.C.R.
(2021 INTERNATIONAL BUILDING CODE VOLUMES 1-2 AND 2022 CALIFORNIA AMENDMENTS)
2022 CALIFORNIA ELECTRICAL CODE (CEC), PART 3, TITLE 24 C.C.R.
(2020 NATIONAL ELECTRICAL CODE AND 2022 CALIFORNIA AMENDMENTS)
2022 CALIFORNIA MECHANICAL CODE (CMC) PART 4, TITLE 24 C.C.R.
(2021 UNIFORM MECHANICAL CODE AND 2022 CALIFORNIA AMENDMENTS)
2022 CALIFORNIA PLUMBING CODE (CPC), PART 5, TITLE 24 C.C.R.
(2021 UNIFORM PLUMBING CODE AND 2022 CALIFORNIA AMENDMENTS)
2022 CALIFORNIA ENERGY CODE (CEC), PART 6, TITLE 24 C.C.R.
2022 CALIFORNIA FIRE CODE, PART 9, TITLE 24 C.C.R.
(2021 INTERNATIONAL FIRE CODE AND 2022 CALIFORNIA AMENDMENTS)
2022 CALIFORNIA GREEN BUILDING STANDARDS CODE, PART 11, TITLE 24 C.C.R.
2022 CALIFORNIA REFERENCED STANDARDS, PART 12, TITLE 24 C.C.R.
TITLE 19 C.C.R., PUBLIC SAFETY, STATE FIRE MARSHAL REGULATIONS.

NFPA 13	AUTOMATIC FIRE SPRINKLER SYSTEMS	2022 EDITION
NFPA 72	NATIONAL FIRE ALARM & SIGNALING CODE	2022 EDITION

REFERENCE CODE SECTIONS FOR APPLICABLE STANDARDS:
2022 CBC, CHAPTER 35
2022 CFC, CHAPTER 80

IDENTIFICATION STAMP
DIV. OF THE STATE ARCHITECT
APP: 03-125900 INC:
REVIEWED FOR
SS ☑ FLS ☑ ACS ☑
DATE: 03/18/2026

4 STEL ENGINEERING
26030 ACERO
MISSION VIEJO, CA 92691
949.305.1150 | FAX 949.305.1420

M BAR C CONSTRUCTION INC.
1770 LA COSTA MEADOWS DRIVE
SAN MARCOS, CA 92078
ERIK KRIVOKOPICH
PHONE: (760) 744-4131
FAX: (760) 744-4449
ERIK@MBARCCONLINE.COM
LIC # 861960
B AND C51
(770) 787-8845

ENGINEER'S APPROVAL

REGISTERED PROFESSIONAL ENGINEER DUSTIN K. ROSENTHAL S 5885 CIVIL STATE OF CALIFORNIA

BID INFORMATION
THE STRUCTURES AND DESIGNS IN THIS PC ARE PROPRIETARY TO M BAR C CONSTRUCTION, INC. AND 4 S.T.E.L. ENGINEERING, INC. ALL SITES USING THIS PC: M BAR C CONSTRUCTION, INC. SHALL BE THE STEEL CONTRACTOR & 4 S.T.E.L. ENGINEERING, INC. SHALL BE THE SEOR. SEE THE STANDARD NOTES FOR PC USE ON S-1 FOR ADDITIONAL REQUIREMENTS.

PRE-CHECK (PC) DOCUMENT
CODE: 2022 CBC
A SEPARATE PROJECT APPLICATION FOR CONSTRUCTION IS REQUIRED

APPROVED
DIV. OF THE STATE ARCHITECT
APP: 04-123955 PC
REVIEWED FOR
SS ☑ FLS ☑ ACS ☑ CG ☐
DATE: 10/14/2024

SITE SPECIFIC INFORMATION
ALTADENA ELEMENTARY SCHOOL
743 E CALAVERAS ST.
ALTADENA, CA 91001

REVISIONS

MARK	DATE	DESCRIPTION

4 STEL JOB #	MC02-V3-6
DATE	10-03-24
DRAWN BY	GM
CHECKED	RWS

UG 22.6.1

COVER SHEET 2

S-2

DRAWINGS, SPECIFICATIONS AND OTHER DOCUMENTS, PREPARED BY THE DESIGN PROFESSIONAL (DP) AND THE DP'S CONSULTANTS ARE INSTRUMENTS OF SERVICE FOR USE SOLELY WITH RESPECT TO THIS PROJECT. THIS INCLUDES DOCUMENTS IN ELECTRONIC FORM. THE DP AND THE DP'S CONSULTANTS SHALL BE DEEMED THE AUTHORS AND OWNERS OF THEIR RESPECTIVE INSTRUMENTS OF SERVICE AND SHALL RETAIN ALL COMMON LAW, STATUTORY AND OTHER RESERVED RIGHTS, INCLUDING COPYRIGHTS. THE INSTRUMENTS OF SERVICE SHALL NOT BE USED BY THE OWNER FOR FUTURE ADDITIONS OR ALTERATIONS TO THIS PROJECT OR FOR OTHER PROJECTS, WITHOUT THE PRIOR WRITTEN AGREEMENT OF THE DP. ANY UNAUTHORIZED USE OF THE INSTRUMENTS OF SERVICE SHALL BE AT THE OWNER'S SOLE RISK AND WITHOUT LIABILITY TO THE DP AND THE DP'S CONSULTANTS.

NOTE: IF DWG. IS NOT 24 x 36, IT IS NOT FULL SIZE

PV PANEL AND PV PANEL FASTENER INSTALLATION PROCEDURE

1. PRIOR TO PRETENSIONED PANEL FASTENER INSTALLATION, THE CONTRACTOR MUST SUBMIT TO THE PROFESSIONAL IN RESPONSIBLE CHARGE FOR REVIEW AND ACCEPTANCE A DETAILED PRETENSIONED PANEL FASTENER INSTALLATION PROCEDURE OUTLINING PROVISIONS TO ENSURE ALL PRETENSIONED PANEL FASTENERS ARE INSTALLED AND TORQUED WITHIN THE SPECIFIED MINIMUM AND MAXIMUM TORQUE RANGE. A COPY OF THE RESPONSIBLE DESIGN PROFESSIONAL-ACCEPTED INSTALLATION PROCEDURE SHALL BE PROVIDED TO THE SPECIAL INSPECTOR AND PROJECT INSPECTOR PRIOR TO COMMENCING PANEL FASTENER INSTALLATION.

   NOTE: THE FASTENER INSTALLATION PROCEDURE MAY ALSO BE SUBMITTED AT TIME OF SITE-SPECIFIC APPLICATION AND INCLUDED ON THE SITE-SPECIFIC CONTRACT DOCUMENTS.

2. INSTALLATION VERIFICATION TESTING AND SPECIAL INSPECTION

   PC DRAWINGS HAVING PRETENSIONED PANEL FASTENER CONNECTIONS SHALL SPECIFY ON APPLICABLE PANEL CONNECTION DETAIL(S):

   SPECIAL INSPECTION AND TORQUE TESTING OF PRETENSIONED PANEL FASTENER INSTALLATION SHALL BE PERFORMED BY A QUALIFIED REPRESENTATIVE OF THE LABORATORY OF RECORD (LOR) IN ACCORDANCE WITH SECTION 2.1.8 ABOVE OF IR PC-7 PC DESIGN CRITERIA FOR CANTILEVERED CANOPY STRUCTURES.

3. SPECIAL INSPECTION AND TESTING
   TO ENSURE COMPLIANCE WITH THE CONTRACTOR'S INSTALLATION PROCEDURE AND DSA-APPROVED CONSTRUCTION DOCUMENTS, SPECIAL INSPECTION OF PRETENSIONED PANEL FASTENER INSTALLATION SHALL BE PERFORMED AS FOLLOWS:

   a. VERIFY THAT SPECIFIED FASTENERS ARE UTILIZED.
   b. VERIFY THAT INSTALLERS HAVE ACCESS TO AND FOLLOW THE INSTALLATION PROCEDURE, INCLUDING ANY SPECIFIED CALIBRATED INSTALLATION EQUIPMENT.
   c. VERIFY AND DOCUMENT PRE-INSTALLATION QUALIFICATION FOR EACH PV PANEL FASTENER INSTALLER BEFORE CONTINUING WITH INSTALLATION BEYOND THIS QUALIFICATION PROCEDURE ON THE PROJECT AS FOLLOWS:
   d. PERFORM TORQUE TESTING OF 30 RANDOMLY SELECTED (AS SPECIFIED IN THE CALIFORNIA ADMINISTRATIVE CODE [CAC]) PANEL FASTENERS FROM THE FIRST 100 FASTENERS INSTALLED.
   e. IF 30 CONSECUTIVE CONFORMING TEST ARE NOT ACHIEVED WITHIN THE FIRST 100 FASTENERS INSTALLED, INSTALL ANOTHER 100 FASTENERS, AND REPEAT THE TESTING PROCESS UNTIL 30 CONSECUTIVE TEST ARE ACHIEVED. ALL FASTENERS FAILING INSTALLATION TORQUE REQUIREMENTS SHALL BE REPLACED AND/OR RE-INSTALLED CORRECTLY BY THE INSTALLER AND TESTED FOR CONFORMANCE.
   f. EQUIPMENT AND TOOLS (E.G., TORQUE WRENCHES) USED FOR VERIFICATION SHALL BE PROVIDED BY THE LOR AND CALIBRATED IN ACCORDANCE WITH MANUFACTURER'S RECOMMENDATIONS AND PERTINENT STANDARD (E.G., ANSI/ASME B107).

4. SPECIAL INSPECTION AND TESTING RATES
   AFTER COMPLETION OF THE PRE-INSTALLATION QUALIFICATION DESCRIBED IN SECTION 2.1.8.3.3 ABOVE, SPECIAL INSPECTION AND TORQUE TESTING OF THE REMAINING INSTALLED PRETENSIONED PANEL FASTENERS (CHOSEN RANDOMLY AS SPECIFIED IN THE CAC, UNLESS INSTALLATION CONCERNS SUGGEST OTHERWISE) TO VERIFY THAT MINIMUM TORQUE VALUES ARE ACHIEVED AND THAT MAXIMUM VALUES ARE NOT EXCEEDED SHALL OCCUR AT LEAST AT THE RATES SHOWN BELOW TO VERIFY CONFORMANCE FOR EACH INSTALLER:

SPECIAL INSPECTION AND TORQUE TESTING RATES TABLE

TOTAL NUMBER OF PANEL FASTENERS ON THE PROJECT	SPECIAL INSPECTION	% OF TOTAL TO BE TESTED
0 - 800	CONTINUOUS	50
801 - 1600	CONTINUOUS	33
1601-3500	PERIODIC*	20
3501-7500	PERIODIC*	10
MORE THAN 7500	PERIODIC*	5

* FOR PROJECTS WITH MORE THAN 1600 TOTAL PANEL FASTENERS, THE FIRST 1600 SHALL RECEIVE CONTINUOUS INSPECTION.
IF ANY FASTENER FAILS TORQUE TESTING, ALL FASTENERS OF THE SAME TYPE AND BY THE SAME INSTALLER, BUT NOT PREVIOUSLY TESTED, SHALL BE TESTED UNTIL 20 CONSECUTIVE FASTENERS PASS, THEN RESUME THE INITIAL TEST FREQUENCY

5. ALL SOLAR PANELS MUST BE INSTALLED BY PROPERLY TRAINED AND QUALIFIED PERSONNEL. PROPERLY TRAINED PERSONNEL SHALL BE:
   - FAMILIAR WITH THE DIFFERENCE BETWEEN A DRILL GUN AND AN IMPACT GUN.
   - FAMILIAR WITH HOW TO MEASURE THE TORQUE ON THE INSTALLED BOLT.
   - SHALL BE TRAINED IN INSTALLATION OF STRUCTURAL STEEL BOLTING.
6. ALL SOLAR PANEL INSTALLATION BOLTS SHALL BE ASTM F593C STAINLESS STEEL BOLTS.
7. TESTING OF ASTM F593C SOLAR PANEL ATTACHMENT BOLTS IS REQUIRED.
8. SOLAR PANELS MUST BE SECURED TO THE STRUCTURE WITH A MINIMUM OF 4 DIRECT BOLTS. ALL 4 BOLTS MUST BE PROPERLY INSTALLED, TORQUED, AND INSPECTED FOR ALL PANELS INSTALLED ON A STRUCTURE BY THE END OF THE WORK DAY. NO PANEL MAY BE LEFT ON THE STRUCTURE WITHOUT ALL 4 BOLTS INSTALLED AND PROPERLY TORQUED.
9. THE INSTALLATION TORQUE SHALL BE INSPECTED TO BE IN CONFORMANCE WITH 5/S-18 OR 7/S-18.
10. SPECIAL INSPECTION OF SOLAR PANEL BOLT INSTALLATION SHALL BE PER NOTE 3 ABOVE.
11. CONTRACTOR RESPONSIBLE FOR SOLAR PANEL INSTALLATION AND ATTACHMENT SHALL PROVIDE A SUBMITTAL TO THE SITE SPECIFIC STRUCTURAL ENGINEER OF RECORD FOR THEIR REVIEW CONTAINING: THE PANEL INSTALLATION PROCEDURES, METHOD TO ENSURE ALL PANELS HAVE ALL 4 BOLTS INSTALLED AND PROPERLY TORQUED BEFORE THE END OF EVERY WORK DAY, ALL TOOLS USED TO SECURE THE SOLAR PANEL (INCLUDING BUT NOT LIMITED TO: POWER TOOLS RPMS, TOOLS MAX TORQUE ABILITY, METHOD OF ENSURING TOQUE VALUES ARE NOT EXCEEDED, ETC)., AND ALL BOLTS AND HARDWARE USED TO SECURE THE PANEL TO THE STRUCTURE.
12. SOLAR PANELS MAY BE INSTALLED IN LANDSCAPE OR PORTRAIT SUBJECT TO PANEL MANUFACTURER INSTALLATION REQUIREMENTS.
13. SOLAR PANELS ARE TO BE LISTED AND LABELED IN ACCORDANCE WITH UL1703, OR IEC / UL61730-1 & IEC / UL61730-2 PER CBC SECTION 1511.9 FOR BOTH PORTRAIT AND LANDSCAPE INSTALLATIONS.
14. THE LOAD RATINGS FOR THE SOLAR PANELS SELECTED BY THE CONTRACTOR MUST MEET OR EXCEED THE ACTUAL DESIGN WIND PRESSURES SHOWN ON THE PC PLANS. SEE S-1 DESIGN PARAMETER CHECK LIST NOTE 2 FOR DESIGN WIND PRESSURES.
15. THE OWNER'S SITE PROFESSIONAL SHALL PROVIDE PRODUCT DOCUMENTATION FROM THE SOLAR PANEL SUPPLIER, INCLUDING PANEL DIMENSIONS AND LOAD RATINGS, TO THE PC DESIGN PROFESSIONAL FOR REVIEW PRIOR TO SUBMITTAL TO DSA FOR PLAN REVIEW. DOCUMENTATION SHALL IDENTIFY PANEL LOAD RATINGS AS ALLOWABLE OR STRENGTH LEVEL,THE NUMBER OF FASTENERS REQUIRED TO ACHIEVE THE RATING, AND SPECIFY WHETHER THE LOADS LISTED ARE DESIGN OR TEST VALUES FROM THE UL 1703 TESTS. UPON ACCEPTANCE, THE PC DESIGN PROFESSIONAL SHALL PROVIDE A STATEMENT TO OWNER'S SITE PROFESSIONAL THAT THE SOLAR PANELS ARE IN COMPLIANCE WITH THE APPROVED PC PLANS. THE OWNER'S SITE PROFESSIONAL SHALL SUBMIT THE STATEMENT AND PANEL DOCUMENTATION TO DSA WITH THE PLAN REVIEW PACKAGE.
16. IF 4 S.T.E.L. ENGINEERING, INC. IS NOT THE DESIGN PROFESSIONAL IN GENERAL RESPONSIBLE CHARGE IT WILL NEED TO BE CONTRACTED BY THE APPROPRIATE PARTY IN ORDER TO SUPPLY THE REQUIRED DOCUMENTATION IN NOTE 12 ABOVE. THE CONTRACT SHALL PROVIDE THE APPROPRIATE FEE AND A MINIMUM OF 15 BUSINESS DAYS LEAD TIME TO REVIEW THE DOCUMENTS IN ORDER TO GENERATE THE REQUIRED STATEMENT. ANY REQUESTS MADE WITH LESS NOTICE WILL REQUIRE ADDITIONAL FEES. SAME DAY REQUESTS WILL NOT BE ACCEPTED.

SPECIAL INSPECTION

1. SOILS:
   - VERIFY THE SITE HAS BEEN PREPARED PROPERLY PRIOR TO PLACEMENT OF CONTROLLED FILL AND/OR EXCAVATIONS FOR FOUNDATIONS.
   - VERIFY THAT THE FOUNDATION EXCAVATIONS ARE PROPER WIDTH, EXTENDED TO PROPER DEPTH AND HAVE REACHED PROPER MATERIAL.
   - VERIFY THAT MATERIALS BELOW FOOTINGS ARE ADEQUATE TO ACHIEVE THE DESIGN BEARING CAPACITY.
2. PIER FOUNDATIONS:
   - INSPECT DRILLING OPERATIONS AND MAINTAIN COMPLETE AND ACCURATE RECORDS FOR EACH PIER.
   - VERIFY LOCATIONS OF PIERS.
3. CONCRETE:
   - VERIFY USE OF REQUIRED DESIGN MIX, DETERMINE THE TEMPERATURE OF THE CONCRETE, AND (WHERE REQUIRED) PERFORM AIR CONTENT TEST.
   - TEST CONCRETE (COMPRESSION TEST).
   - INSPECT PLACEMENT OF FORMWORK, REINFORCING STEEL, EMBEDDED ITEMS, AND CONCRETE. INSPECT CURING AND FORM REMOVAL.
   - INSPECT INSTALLATION OF POST-INSTALLED ANCHORS.
   - TEST POST-INSTALLED ANCHORS PER 2022 CBC 1910A.5.
   - ALL ½"Ø HILTI STAINLESS STEEL KB-TZ2 BOLTS TO BE INSTALLED TO 40 FT- LBS OF TORQUE. ALL ⅝"Ø HILTI STAINLESS STEEL KB-TZ2 BOLTS TO BE INSTALLED TO 60 FT- LBS OF TORQUE. ALL ¾"Ø HILTI STAINLESS STEEL KB-TZ2 BOLTS TO BE INSTALLED TO 125 FT- LBS OF TORQUE. AT LEAST 50% OF THE INSTALLED ANCHORS SHALL BE TESTED. HILTI KB TZ2 BOLTS PER ICC ESR-4266.
   - SLUMP TEST SHALL BE PERFORMED PER SITE SPECIFIC DSA-103.
4. STEEL:
   - VERIFY THAT ALL MATERIALS ARE APPROPRIATELY MARKED AND THAT:
     - MILL CERTIFICATES INDICATE MATERIAL PROPERTIES THAT COMPLY WITH REQUIREMENTS.
     - MATERIAL SIZES, TYPES AND GRADES COMPLY WITH REQUIREMENTS.
   - TEST UNIDENTIFIED MATERIALS.
   - VERIFY MEMBER LOCATIONS, BRACING AND ALL DETAILS CONSTRUCTED IN THE FIELD.
   - VERIFY STIFFENER LOCATIONS, CONNECTION TAB LOCATIONS, AND ALL CONSTRUCTION DETAILS FABRICATED IN THE SHOP.
   - VERIFY WELD FILLER MATERIAL IDENTIFICATION MARKINGS PER AWS DESIGNATION LISTED ON THE DSA APPROVED DOCUMENTS AND THE WPS.
   - VERIFY WELD FILLER MATERIAL MANUFACTURER'S CERTIFICATE OF COMPLIANCE.
   - VERIFY WPS, WELDER QUALIFICATIONS, AND EQUIPMENT.
   - INSPECT GROOVE, MULTI-PASS, AND FILLET WELDS > 5⁄16" (BOTH SHOP AND FIELD WELDS).
5. SHOP FABRICATION:
   - VERIFY FABRICATOR'S FABRICATION AND QUALITY CONTROL PROCEDURES.
   - VERIFY ALL ASPECTS OF SHOP FABRICATION INCLUDING MEMBER LOCATIONS, DIMENSIONAL LAYOUT OF ALL PARTS AND PIECES, ALL WELDING, BOLTING, ETC.
6. SEE DSA APPROVED 103 FOR ADDITIONAL REQUIREMENTS.

CONCRETE NOTES

1. CONCRETE MIN. 4,500 PSI AT 28 DAYS UNLESS THE GEOTECHNICAL REPORT ALLOWS FOR A LOWER STRENGTH (4,000 PSI MIN.). BATCH PLANT INSPECTION NOT REQUIRED.
2. CONCRETE TO REACH 1,000 psi PRIOR TO REMOVAL OF SHORING AND/OR INSTALLATION OF BEAMS AND PURLINS. (NOTE: A HIGHER COMPRESSIVE CONCRETE MAY BE USED TO ACHIEVE 1,000 psi SOONER. SUBMIT AN APPROVED CONCRETE MIX DESIGN TO JUSTIFY) OR 24 HRS WHICH COMES FIRST.
3. CONCRETE TO REACH 3,000 psi PRIOR TO INSTALLATION OF SOLAR PANELS. (NOTE: A HIGHER COMPRESSIVE CONCRETE MAY BE USED TO ACHIEVE 3,000 psi SOONER. SUBMIT AN APPROVED CONCRETE MIX DESIGN TO JUSTIFY).
4. REINFORCEMENT BARS SHALL BE ASTM A615, GR60. MINIMUM U.N.O.
5. MINIMUM CONCRETE COVER SHALL BE 2½" TO EARTH (DRILLED PIER FOUNDATIONS ONLY), 3" TO EARTH ALL OTHER CONCRETE, 2" TO SKY. PER CBC TABLE 1808A.8.2.
6. ALL REINFORCING STEEL AND OTHER EMBEDDED ITEMS SHALL BE SECURELY POSITIONED PRIOR TO THE POURING OF CONCRETE.
7. ALL CONCRETE WORK SHALL COMPLY WITH ACI 301 & 318 LATEST EDITION.
8. AGGREGATE GRADATION AND QUALITY SHALL BE IN ACCORDANCE WITH ACI 302-IR.
9. COLD JOINTS SHALL HAVE A ROUGHENED SURFACE. BONDING AGENT SHALL COMPLY WITH ASTM C1059. A SUBMITTAL FOR CONCRETE BONDING AGENT SHALL BE APPROVED BY DESIGN PROFESSIONAL IN RESPONSIBLE CHARGE PRIOR TO INSTALLATION. DSA INSPECTOR OF RECORD TO PERIODICALLY INSPECT INSTALLATION OF BONDING AGENT.
10. BATCH PLANT INSPECTION NOT REQUIRED PER CBC 1705A3.3.2. SUBJECT TO:
    - A LICENSED WEIGHMASTER SHALL POSITIVELY IDENTIFY QUANTITY OF MATERIALS AND CERTIFY EACH LOAD BY A BATCH TICKET.
    - BATCH TICKETS, INCLUDING MATERIAL QUANTITIES AND WEIGHTS SHALL ACCOMPANY THE LOAD, SHALL BE TRANSMITTED TO THE INSPECTOR OF RECORD BY THE TRUCK DRIVER WITH LOAD IDENTIFIED THEREON. THE LOAD SHALL NOT BE PLACED WITHOUT A BATCH TICKET IDENTIFYING THE MIX. THE INSPECTOR OF RECORD SHALL KEEP A DAILY RECORD OF PLACEMENTS, IDENTIFYING EACH TRUCK, ITS LOAD, AND TIME OF RECEIPT AT THE JOBSITE, AND APPROXIMATE LOCATION OF DEPOSIT IN THE STRUCTURE AND SHALL MAINTAIN A COPY OF THE DAILY RECORD AS REQUIRED BY THE ENFORCEMENT AGENCY.
11. CONCRETE MAY BE PUMPED, POURED, TAILGATED OR OTHER SUCH METHODS INTO PLACE. CONCRETE SHALL BE ALLOWED TO FREE FALL THE ENTIRE DEPTH OF THE FOUNDATION, AS INDICATED IN ACI 304R-09, CHAPTER 5. PLACEMENT OF ANY FREE-FALL CONCRETE SHALL BE SUCH THAT THE CONCRETE DOES NOT ALTER THE EMBEDMENT DEPTH OR THE CLEARANCE OF THE REINFORCING BAR CAGE OR OTHER EMBEDDED MATERIALS.
12. CONCRETE SHALL MEET THE FOLLOWING MINIMUM REQUIREMENTS BASED ON EXPOSURE CLASS IN ACCORDANCE WITH ACI 318-19 TABLE 19.3.2.1 WHEN DETERMINED BY A SITE SPECIFIC GEOTECHNICAL REPORT. WHEN EXPOSURE CLASS NOT SPECIFIED, USE "NOT DETERMINED" AS PERMITTED BELOW.
13. AIR-ENTRAINED CONCRETE AT EXPOSURE CLASSES F1, F2 AND F3 SHALL MEET ACI 318-19 SECTION 19.3.3.

REQUIREMENTS FOR CONCRETE BASED ON EXPOSURE CLASS

USE	EXPOSURE CLASS ACI TABLE 19.3.1.1	MINIMUM CONCRETE STRENGTH F'_c	CEMENT TYPE ASTM C150	MAX. WATER/CEMENT RATIO W/M
☐	NOT DETERMINED	4,500 PSI	TYPE V	0.45
☒	F0, S0, W0, W1, C0, C1	4,000 PSI	TYPE II	N/A
☐	S1, W2	4,000 PSI	TYPE II	0.50
☐	C2, F3	5,000 PSI	TYPE V	0.40
☐	ALL OTHER	4,500 PSI	TYPE V	0.45

STEEL NOTES

1. COLD FORMED STEEL SIZES ARE BASED ON GAUGE THICKNESS.
2. PURLINS, BEAMS, POSTS (FRAMING MEMBERS) HAVE MIN. YIELD STRENGTHS AS INDICATED.
3. ZINC COATING OF STRUCTURAL STEEL SHALL CONFORM WITH G90 STANDARD OR BETTER COLD FORMED STEEL (CFS) MEMBERS TO BE GALVANIZED IN ACCORDANCE WITH ASTM A653 G90 STANDARD. HOLLOW STRUCTURAL STEEL (HSS) MEMBERS AND STEEL PLATES SHALL BE GALVANIZED IN ACCORDANCE WITH ASTM A123, UNLESS NOTED OTHERWISE.
4. ALL STEEL MEMBERS SHALL BE GALVANIZED OR PAINTED WITH ZINC-RICH PRIMER, UNDERCOAT AND FINISH COAT OR EQUIVALENT PAINT SYSTEM. CONTRACT DOCUMENTS SHALL SPECIFY THE TYPE OF SSPC CORROSION RESISTING SYSTEM TO BE UTILIZED AND THE SSPC GRADE FOR CLEANING, MINIMUM SSPC GRADE SP2.
5. STRUCTURAL STEEL SHALL BE HOT-DIP GALVANIZED (MINIMUM ASTM A123 OR A153, CLASS D) OR PAINTED WITH ZINC-RICH PRIMER, UNDERCOAT, AND FINISH COAT; OR EQUIVALENT PAINT SYSTEM. COLD-FORMED STEEL MEMBERS SHALL BE 55% ALUMINUM-ZINC ALLOY COATED PER ASTM A792/A792M STANDARD IN ACCORDANCE TO AISI S240 TABLE A4-1, CP 90 COATING DESIGNATION.
6. ALL EXPOSED STEEL FASTENERS, INCLUDING CAST IN PLACE ANCHOR BOLTS/RODS, SHALL BE STAINLESS STEEL (TYPE 304 MINIMUM), HOT-DIP GALVANIZED (ASTM A153, CLASS D MINIMUM OR ASTM F2329), OR PROTECTED WITH CORROSION-PREVENTIVE COATING THAT DEMONSTRATED NO MORE THAN 2% OF RED RUST IN MINIMUM 1,000 HOURS OF EXPOSURE IN SALT SPRAY TEST PER ASTM B117. ZINC-PLATED FASTENERS DO NOT COMPLY WITH THIS REQUIREMENT. (EXAMPLE PROPRIETARY COATINGS THAT COMPLY WITH THE 1000 HOUR REQUIREMENT INCLUDE BUT ARE NOT NECESSARILY LIMITED TO: QUIK GUARD BY SIMPSON, KWIK-COTE BY HILTI, STALGARD BY ELCO, VISTACORR BY SFS INTEC, ETC.)
7. ALL STEEL FABRICATION SHALL COMPLY WITH LATEST AISC SPECIFICATIONS.
8. ALL WELDING SHALL COMPLY WITH THE LATEST AWS D1.1. ALL WELD FILLER MATERIAL SHALL HAVE A MINIMUM CHARPY V-NOTCH (CVN) VALUE OF 20 FT-LBS AT A TEMPERATURE OF -20° F.
9. ALL BOLTS TO MEET OR EXCEED ASTM A307. NO BOLTING INSPECTIONS REQUIRED U.N.O.
10. ALL PLATES AND ANGLES TO BE ASTM A36 U.N.O.
11. ALL STRUCTURAL TUBING TO BE ASTM A1085 U.N.O.
12. ALL PURLINS TO BE ASTM A653 GR. 55
13. REPAIR ANY DAMAGED GALVANIZATION AFTER FIELD WELDS WITH AN APPROVED REPAIR METHOD.
14. ALL MEMBERS TO BE GALVANIZED OR PRIMED AND PAINTED IN ACCORDANCE WITH THE CONTRACT DOCUMENTS. ALL CONTRACT DOCUMENTS SHALL SPECIFY THE TYPE OF SSPC CORROSION RESISTING SYSTEM TO BE UTILIZED AND THE SSPC GRADE FOR CLEANING, MINIMUM SSPC GRADE SP2.
15. ALL BEAM TO COLUMN CONNECTIONS TO MEET WITH DETAILS 3 OR 4/S-10, 3 OR 4/S-15 FOR CORROSION PROTECTION.
16. ALL A307 BOLTS MAY BE SUBSTITUTED WITH THE SAME QUANTITY OF SAE J429 GRADE 2 BOLTS OF THE SAME DIAMETER.
17. A1085 STEEL HAS SAME OR BETTER PROPERTIES AND WELDABILITY THAN A500 GR. B.
18. BOLT HOLES FOR ½" Ø BOLTS SHALL BE 9⁄16" Ø.
19. BOLTS SHALL BE TIGHTENED TO SNUG-TIGHT CONDITION UNLESS NOTED OTHERWISE.
20. ALL BOLTS SHALL BE PROVIDED WITH A METHOD TO PREVENT NUTS FROM LOOSENING. SAMPLE ACCEPTABLE METHODS ARE: LOCK WASHERS, NYLOCK NUTS, BOLTS WITHOUT WASHERS WITH SERRATED NUTS, ND PATCH, LOCTITE, OTHER SIMILAR CHEMICAL LOCKING DEVICES, OR OTHER SIMILAR LOCKING DEVICES. ONLY ONE METHOD IS REQUIRED. CONTRACTOR TO IDENTIFY A METHOD IN ALL SUBMITTALS TO THE DESIGN PROFESSIONAL IN GENERAL RESPONSIBLE CHARGE.
21. ALL BOLTS IN THIS PC OTHER THAN THOSE SHOWN IN DETAILS 3/S-18, 4/S-18, 5/S-18, 7/S-18 DO NOT REQUIRE SPECIAL INSPECTION.
22. ALL HSS MEMBERS MAY BE SUBSTITUTED WITH AN ALTERNATE HSS MEMBER WITH EQUAL OR GREATER DIMENSIONS IN HEIGHT, WIDTH, AND THICKNESS. EXAMPLE HSS 12x8x¼ MAY BE SUBSTITUTED WITH 12x8x5⁄16 OR 14x10x5⁄16 OR 16x12x⅜ OR OTHER MEMBER WITH A HEIGHT EQUAL TO OR GREATER THAN 12 INCHES WITH A WIDTH EQUAL TO OR GREATER THAN 8 INCHES WITH A WALL THICKNESS OF ¼ INCH OR GREATER.
23. ALL HSS MEMBERS USING ASTM A1085 MATERIAL MAY SUBSTITUTE ASTM A500, GRADE B MATERIAL PROVIDED THE THICKNESS OF THE MEMBER IS INCREASED BY A MINIMUM OF 1⁄16".
24. BOLT HOLES IN THE PURLIN MEMBERS FOR THE PURLIN TO BEAM CONNECTIONS AND PURLIN SPLICES MAY BE OVERSIZED BY ⅛".

SOILS NOTES

1. A SITE SPECIFIC GEOTECHNICAL REPORT IS REQUIRED.
2. THE GEOTECHNICAL ENGINEER SHALL REVIEW THE SITE CONDITIONS, TESTING RESULTS, ALL APPLICABLE ALLOWABLE INCREASES AND SPECIFY THE FINAL SOIL CLASS TO BE USED FROM THE TABLE BELOW. THE GEOTECHNICAL ENGINEER SHALL PROVIDE IN THE GEOTECHNICAL REPORT THE BASE VALUES WITHOUT INCREASE FOR MINIMUM 24" DIAMETER PIERS; THE ALLOWABLE VERTICAL END BEARING, ALLOWABLE LATERAL BEARING, ALLOWABLE DOWNWARD SKIN FRICTION AND ALLOWABLE SKIN FRICTION TO RESIST UPLIFT. FACTORS OF SAFETY USED FOR THESE BASE VALUES ARE TO BE CLEARLY IDENTIFIED. THE GEOTECHNICAL ENGINEER SHALL ALSO PROVIDE ANY ALLOWABLE INCREASES TO THE BASE VALUES. POSSIBLE ALLOWABLE INCREASES TO BE CONFIRMED BY THE GEOTECHNICAL ENGINEER ARE: DOUBLE LATERAL BEARING VALUES DUE TO ISOLATED FOUNDATIONS, DOUBLE LATERAL BEARING VALUES DUE TO THE STRUCTURE NOT BEING ADVERSELY AFFECTED BY 1/2" DEFLECTION AT THE SURFACE, A 4/3 INCREASE DUE TO SHORT TERM LOADING AND ANY OTHER ALLOWABLE INCREASES. THE GEOTECHNICAL ENGINEER SHALL MAKE RECOMMENDATION FOR THE SOIL CLASS TO BE USED AFTER ALL INCREASES HAVE BEEN APPLIED, WHERE ALLOWED PER THE 2022 CBC LOAD COMBINATIONS. ALL FOUNDATIONS HAVE BEEN DESIGNED BASED ON THE VALUES PRESENTED IN THE TABLE BELOW. THE GEOTECHNICAL REPORT SHALL ADDRESS IF THE USE OF STEEL CASING THAT IS TWISTED INTO PLACE AND LEFT INSTALLED AFFECTS ANY ALLOWABLE VALUES.
3. THE GEOTECHNICAL ENGINEER MAY SPECIFY DIFFERENT SOILS CLASSES TO BE USED FOR THE DIFFERENT STRUCTURE TYPES (T OR OT), DIFFERENT AREAS OF THE SITE (I.E. NORTH LOT OR WEST LOT), OR THE ENGINEER MAY SPECIFY ONE SOILS CLASS TO BE USED FOR THE ENTIRE SITE.
4. THE GEOTECHNICAL ENGINEER SHALL ADDRESS IN THE REPORT ANY CONCRETE DURABILITY REQUIREMENTS IN ACCORDANCE WITH ACI 318-19 CHAPTER 4.
5. THE GEOTECHNICAL REPORT SHALL BE SPECIFIC TO THE LOCATION OF THE PHOTOVOLTAIC STRUCTURES. BORING(S) SHALL BE DONE AT THE SPECIFIC LOCATION(S) WHERE THE PHOTOVOLTAIC STRUCTURES ARE TO OCCUR. THE GEOTECHNICAL REPORT SHALL CONFORM TO 2022 CBC SECTION 1803A.
6. GEOTECHNICAL ENGINEER SHALL IDENTIFY THE LOCATION WHERE "USABLE SOIL" STARTS WHICH IS ALLOWED TO BE AT GRADE OR DEEPER IF NECCESSARY. SEE DETAILS 2/S-6, 2/S-11, 3/S-11.
7. A COPY OF THE GEOTECHNICAL REPORT SHALL BE PROVIDED AT THE TIME OF PLAN REVIEW.
8. AT THE TIME OF PLAN REVIEW, THE STRUCTURAL ENGINEER OF RECORD SHALL SELECT A SOILS CLASS ON THE SITE-SPECIFIC PLANS BASED ON THE GEOTECHNICAL REPORT.
9. DESIGN OF PC STRUCTURE ASSUMES A MAXIMUM LATERAL DISPLACEMENT OF 1/2" AT THE BASE; ALLOWABLE LATERAL BEARING VALUES THAT RESULT IN LARGER DISPLACEMENTS ARE NOT ACCEPTABLE FOR USE WITH THIS PC STRUCTURE
10. MAXIMUM COLUMN HEIGHT AND FOUNDATION DEPTH FOR STRUCTURES LOCATED ADJACENT TO SLOPES SHALL BE MEASURED FROM A PROJECTED HORIZONTAL LINE OF 7d FROM THE FACE OF THE SLOPE AS SHOWN BELOW:

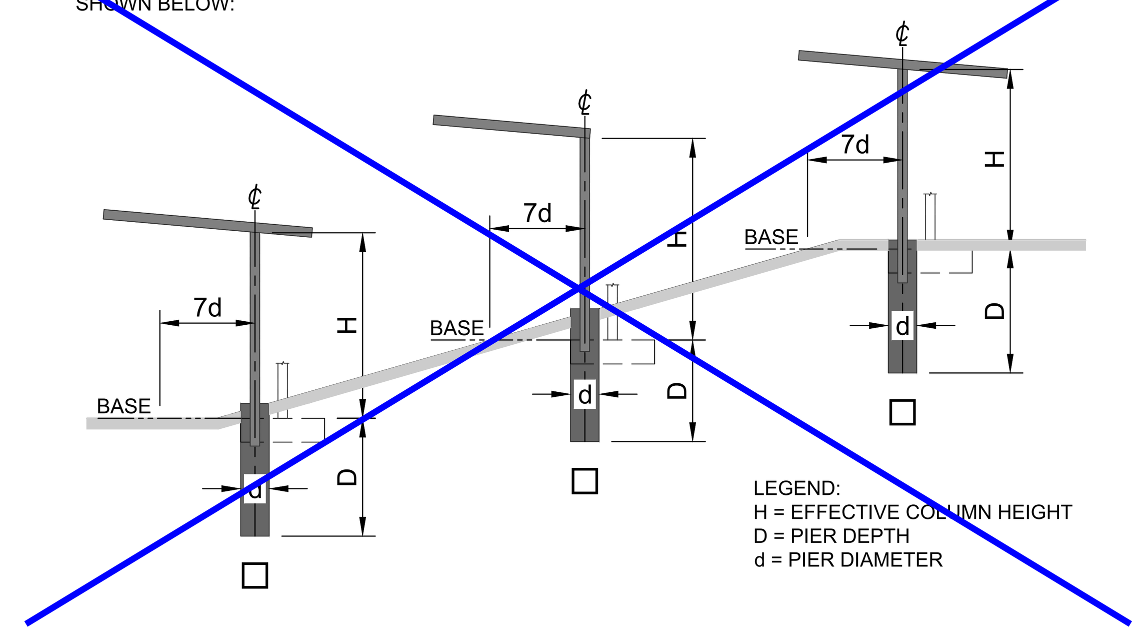

PIER FOUNDATIONS - FINAL DESIGN VALUES [1,2,3]

USE	SOILS CLASS	MIN. ALLOWABLE END BEARING (psf)	MIN. ALLOWABLE LATERAL BEARING (psf/ft)	MAX. LATERAL BEARING (psf)	MIN. ALLOWABLE SKIN FRICTION DOWN (psf)	MIN. ALLOWABLE SKIN FRICTION UP (psf)
☒	CLASS W	0	267	4,000	250	125
☐	CLASS X	0	400	6,000	365	162.5
☐	CLASS Y	0	533	8,000	365	175
☐	CLASS Z	0	800	12,000	425	212.5

SPREAD FOOTINGS - FINAL DESIGN VALUES [1,2,3]

USE	SOILS CLASS	MIN. ALLOWABLE END BEARING (psf)	MIN. ALLOWABLE LATERAL BEARING (psf/ft)	MAX. LATERAL BEARING (psf)	SLIDING FRICTION μ
☐	ALL	1,500	100	2,000	0.25

NOTES:
1. TABLE ALREADY TAKES INTO ACCOUNT 1/3 INCREASE AND DOUBLING OF THE PASSIVE PRESSURE WITHOUT ANY FURTHER INCREASES. GEOTECHNICAL ENGINEER IS REQUIRED TO SPECIFY THE SOILS CLASS WHERE FINAL VALUES WITH INCREASES ARE NOT ALLOWED TO EXCEED THESE VALUES)
2. DOUBLING THE PASSIVE PRESSURE DUE TO SOIL ARCHING EFFECTS IS NOT ALLOWED IN CONJUCTION WITH DOUBLING BASED ON THE 1/2" DEFLECTION AT THE SURFACE.
3. THE FOUNDATION DESIGNS FOR THIS PC ARE BASED ON 2022 CBC ALTERNATE BASIC LOAD COMBINATIONS PER SECTION 1605A.3.2 WHERE 1/3 INCREASES ARE ALLOWED.

IDENTIFICATION STAMP
DIV. OF THE STATE ARCHITECT
APP: 03-125900 INC:
REVIEWED FOR
SS ☑ FLS ☑ ACS ☑
DATE: 03/18/2026

4 STEL ENGINEERING
26030 ACERO
MISSION VIEJO, CA 92691
949.305.1150 | FAX 949.305.1420

M BAR C CONSTRUCTION INC.
1770 LA COSTA MEADOWS DRIVE SAN MARCOS, CA 92078
ERIK KRIVOKOPICH
PHONE: (760) 744-4131
FAX: (760) 744-4449
ERIK@MBARCONLINE.COM
LIC # 869960
B AND C51
(775) 787-8845

ENGINEER'S APPROVAL
REGISTERED PROFESSIONAL ENGINEER
DUSTIN K. ROSEPINK
S 5885
STRUCTURAL
STATE OF CALIFORNIA

BID INFORMATION
THE STRUCTURES AND DESIGNS IN THIS PC ARE PROPRIETARY TO M BAR C CONSTRUCTION, INC. AND 4 S.T.E.L. ENGINEERING, INC. ALL SITES USING THIS PC: M BAR C CONSTRUCTION, INC. SHALL BE THE STEEL CONTRACTOR & 4 S.T.E.L. ENGINEERING, INC. SHALL BE THE SEOR. SEE THE STANDARD NOTES FOR PC USE ON S-1 FOR ADDITIONAL REQUIREMENTS.

PRE-CHECK (PC) DOCUMENT
CODE: 2022 CBC
A SEPARATE PROJECT APPLICATION FOR CONSTRUCTION IS REQUIRED

APPROVED
DIV. OF THE STATE ARCHITECT
APP: 04-123955 PC
REVIEWED FOR
SS ☑ FLS ☑ ACS ☑ CG ☐
DATE: 10/14/2024

SITE SPECIFIC INFORMATION
ALTADENA ELEMENTARY SCHOOL
743 E CALAVERAS ST.
ALTADENA, CA 91001

REVISIONS

MARK	DATE	DESCRIPTION

4 STEL JOB # MC02-V3-6
DATE 10-03-24
DRAWN BY GM
CHECKED RWS
UG 22.6.1
GENERAL NOTES
S-3

DRAWINGS, SPECIFICATIONS AND OTHER DOCUMENTS, PREPARED BY THE DESIGN PROFESSIONAL (DP) AND THE DP'S CONSULTANTS ARE INSTRUMENTS OF SERVICE FOR USE SOLELY WITH RESPECT TO THIS PROJECT. THIS INCLUDES DOCUMENTS IN ELECTRONIC FORM. THE DP AND THE DP'S CONSULTANTS SHALL BE DEEMED THE AUTHORS AND OWNERS OF THEIR RESPECTIVE INSTRUMENTS OF SERVICE AND SHALL RETAIN ALL COMMON LAW, STATUTORY AND OTHER RESERVED RIGHTS, INCLUDING COPYRIGHTS. THE INSTRUMENTS OF SERVICE SHALL NOT BE USED BY THE OWNER FOR FUTURE ADDITIONS OR ALTERATIONS TO THIS PROJECT OR FOR OTHER PROJECTS, WITHOUT THE PRIOR WRITTEN AGREEMENT OF THE DP. ANY UNAUTHORIZED USE OF THE INSTRUMENTS OF SERVICE SHALL BE AT THE OWNER'S SOLE RISK AND WITHOUT LIABILITY TO THE DP AND THE DP'S CONSULTANTS.

NOTE: IF DWG. IS NOT 24 x 36, IT IS NOT FULL SIZE

DSA 103-22: LISTING OF STRUCTURAL TESTS & SPECIAL INSPECTIONS, 2022 CBC

Application Number: 04-122157 | **School Name:** Ultimate Guardian PC-22.6 - Spread Footing Only with Post Installed Anchors | **School District:** N/A
DSA File Number: PC-61 | **Increment Number:** | **Date Created:** 2023-04-06

Geotechnical Reports: Project has a geotechnical report, or CDs indicate soils special inspection is required by GE

	S1. GENERAL:			
	Test or Special Inspection	**Type**	**Performed By**	**Code References and Notes**
☑	**a.** Verify that: • Site has been prepared properly prior to placement of controlled fill and/or excavations for foundations. • Foundation excavations are extended to proper depth and have reached proper material. • Materials below footings are adequate to achieve the design bearing capacity.	**Periodic**	**GE***	* By geotechnical engineer or his or her qualified representative. (See Appendix (end of this form) form for exemptions.)

	C1. CAST-IN-PLACE CONCRETE			
	Test or Special Inspection	**Type**	**Performed By**	**Code References and Notes**
☑	**a.** Verify use of required design mix.	**Periodic**	**SI**	**Table 1705A.3 Item 5, 1910A.1.**
☑	**b.** Identifiy, sample, and test reinforcing steel.	**Test**	**LOR**	**1910A.2;** ACI 318-19 Ch.20 and Section 26.6.1.2; DSA IR 17-10. (See Appendix (end of this form) for exemptions.)
☑	**c.** During concrete placement, fabricate specimens for strength tests, perform slump and air content tests, and determine the temperature of the concrete.	**Test**	**LOR**	**Table 1705A.3 Item 6**; ACI 318-19 Sections 26.5 & 26.12.
☑	**d.** Test concrete (f'c).	**Test**	**LOR**	**1905A.1.17;** ACI 318-19 Section 26.12.

	C5. POST-INSTALLED ANCHORS:			
	Test or Special Inspection	**Type**	**Performed By**	**Code References and Notes**
☑	**a.** Inspect installation of post-installed anchors	**See Notes**	**SI***	**1617A.1.19, Table 1705A.3 Item 4a (Continuous) & 4b (Periodic), 1705A.3.8** (See Appendix (end of this form) for exemptions). ACI 318-14 Sections 17.8 & 26.13. * May be performed by the project inspector when specifically approved by DSA.
☑	**b.** Test post-installed anchors.	**Test**	**LOR**	**1910A.5.** (See Appendix (end of this form) for exemptions.)

	S/A1. STRUCTURAL STEEL, COLD-FORMED STEEL AND ALUMINUM USED FOR STRUCTURAL PURPOSES			
	Test or Special Inspection	**Type**	**Performed By**	**Code References and Notes**
☑	**a.** Verify identification of all materials and: • Mill certificates indicate material properties that comply with requirements. • Material sizes, types and grades comply with requirements.	**Periodic**	*	**Table 1705A.2.1 Item 3a–3c.** 2202A.1; AISI S100-20 Section A3.1 & A3.2, AISI S240-20 Section A3 & A5, AISI S220-20 Sections A4 & A6. * By special inspector or qualified technician when performed off-site.
☑	**b.** Test unidentified materials	**Test**	**LOR**	**2202A.1.**
☑	**c.** Examine seam welds of HSS shapes	**Periodic**	**SI**	DSA IR 17-3.
☑	**d.** Verify and document steel fabrication per DSA-approved construction documents.	**Periodic**	**SI**	Not applicable to cold-formed steel light-frame construction, except for trusses (**1705A.2.4**).

	S/A3. WELDING:			
	Test or Special Inspection	**Type**	**Performed By**	**Code References and Notes**
☑	**a.** Verify weld filler material identification markings per AWS designation listed on the DSA-approved documents and the WPS.	**Periodic**	**SI**	**1705A.2.5, Table 1705A.2.1 Items 4 & 5**; AWS D1.1 and AWS D1.8 for structural steel; AWS D1.2 for Aluminum; AWS D1.3 for cold-formed steel; AWS D1.4 for reinforcing steel; DSA IR 17-3.
☑	**b.** Verify weld filler material manufacturer's certificate of compliance.	**Periodic**	**SI**	DSA IR 17-3.
☑	**c.** Verify WPS, welder qualifications and equipment.	**Periodic**	**SI**	DSA IR 17-3.

	S/A4. SHOP WELDING (IN ADDITION TO SECTION S/A3):			
	Test or Special Inspection	**Type**	**Performed By**	**Code References and Notes**
☑	**a.** Inspect groove welds, multi-pass fillet welds, single pass fillet welds > 5/16", plug and slot welds.	**Continuous**	**SI**	**Table 1705A.2.1 Items 5a.1–4;** AISC 360-16 (and AISC 341-16 as applicable); DSA IR 17-3.
☑	**b.** Inspect single-pass fillet welds ≤ 5/16", floor and roof deck welds.	**Periodic**	**SI**	**1705A.2.2, Table 1705A.2.1 Items 5a.5 & 5a.6;** AISC 360-16 (and AISC 341-16 as applicable); DSA IR 17-3.

	S/A5. FIELD WELDING (IN ADDITION TO SECTION S/A3):			
	Test or Special Inspection	**Type**	**Performed By**	**Code References and Notes**
☑	**a.** Inspect groove welds, multi-pass fillet welds, single pass fillet welds > 5/16", plug and slot welds.	**Continuous**	**SI**	**Table 1705A.2.1 Items 5a.1–4;** AISC 360-16 (AISC 341-16 as applicable); DSA IR 17-3.
☑	**b.** Inspect single-pass fillet welds ≤ 5/16".	**Periodic**	**SI**	**Table 1705A.2.1 Item 5a.5;** AISC 360-16 (AISC 341-16 as applicable); DSA IR 17-3.

	X1. OTHER:			
	Test or Special Inspection	**Type**	**Performed By**	**Code References and Notes**
☑	**c.** SOLAR PANEL ATTACHMENT	**Continuous**	**LOR**	Pre-tension bolt connections and calibration of test equipment
☑	**d.** SOLAR PANEL ATTACHMENT BOLTS	**Test**	**LOR**	Bolts shall be identified, sampled, and tested in accordance with DSA IR 17-8.19

1. Soils Testing and Inspection: Geotechnical Verified Report Form DSA 293
2. Structural Testing and Inspection: Laboratory Verified Report Form DSA 291
3. Post-installed Anchors: Laboratory Verified Report Form DSA 291, or, for independently contracting SI, Special Inspection Verified Report Form DSA 292
4. Shop Welding Inspection: Laboratory Verified Report Form DSA 291, or, for independently contracting SI, Special Inspection Verified Report Form DSA 292
5. Field Welding Inspection: Laboratory Verified Report Form DSA 291, or, for independently contracting SI, Special Inspection Verified Report Form DSA 292

5 / - SAMPLE DSA-103 - STRUCTURES WITH ONLY SPREAD FOUNDATIONS WITH POST INSTALLED ANCHORS

DSA 103-22: LISTING OF STRUCTURAL TESTS & SPECIAL INSPECTIONS, 2022 CBC

Application Number: 04-122157 | **School Name:** Ultimate Guardian PC-22.6 - Pier and Pad Footing without Post Installed Anchors | **School District:** N/A
DSA File Number: PC-61 | **Increment Number:** | **Date Created:** 2023-04-06

Geotechnical Reports: Project has a geotechnical report, or CDs indicate soils special inspection is required by GE

	S1. GENERAL:			
	Test or Special Inspection	**Type**	**Performed By**	**Code References and Notes**
☑	**a.** Verify that: • Site has been prepared properly prior to placement of controlled fill and/or excavations for foundations. • Foundation excavations are extended to proper depth and have reached proper material. • Materials below footings are adequate to achieve the design bearing capacity.	**Periodic**	**GE***	* By geotechnical engineer or his or her qualified representative. (See Appendix (end of this form) form for exemptions.)

	S4. CAST-IN-PLACE DEEP FOUNDATIONS (PIERS):			
	Test or Special Inspection	**Type**	**Performed By**	**Code References and Note**
☑	**a.** Inspect drilling operations and maintain complete and accurate records for each pier.	**Continuous**	**GE***	* By geotechnical engineer or his or her qualified representative. (See Appendix (end of this form) for exemptions.)
☑	**b.** Verify pier locations, diameters, plumbness, bell diameters (if applicable), lengths and embedment into bedrock (if applicable); record concrete or grout volumes.	**Continuous**	**GE***	* By geotechnical engineer or his or her qualified representative. (See Appendix (end of this form) for exemptions.)
☑	**c.** Confirm adequate end strata bearing capacity.	**Continuous**	**GE***	* By geotechnical engineer or his or her qualified representative. (See Appendix (end of this form) for exemptions.)
☑	**d.** Concrete piers.	Provide tests and inspections per CONCRETE section below.		

	C1. CAST-IN-PLACE CONCRETE			
	Test or Special Inspection	**Type**	**Performed By**	**Code References and Notes**
☑	**a.** Verify use of required design mix.	**Periodic**	**SI**	**Table 1705A.3 Item 5, 1910A.1.**
☑	**b.** Identifiy, sample, and test reinforcing steel.	**Test**	**LOR**	**1910A.2;** ACI 318-19 Ch.20 and Section 26.6.1.2; DSA IR 17-10. (See Appendix (end of this form) for exemptions.)
☑	**c.** During concrete placement, fabricate specimens for strength tests, perform slump and air content tests, and determine the temperature of the concrete.	**Test**	**LOR**	**Table 1705A.3 Item 6**; ACI 318-19 Sections 26.5 & 26.12.
☑	**d.** Test concrete (f'c).	**Test**	**LOR**	**1905A.1.17;** ACI 318-19 Section 26.12.

	S/A1. STRUCTURAL STEEL, COLD-FORMED STEEL AND ALUMINUM USED FOR STRUCTURAL PURPOSES			
	Test or Special Inspection	**Type**	**Performed By**	**Code References and Notes**
☑	**a.** Verify identification of all materials and: • Mill certificates indicate material properties that comply with requirements. • Material sizes, types and grades comply with requirements.	**Periodic**	*	**Table 1705A.2.1 Item 3a–3c.** 2202A.1; AISI S100-20 Section A3.1 & A3.2, AISI S240-20 Section A3 & A5, AISI S220-20 Sections A4 & A6. * By special inspector or qualified technician when performed off-site.
☑	**b.** Test unidentified materials	**Test**	**LOR**	**2202A.1.**
☑	**c.** Examine seam welds of HSS shapes	**Periodic**	**SI**	DSA IR 17-3.
☑	**d.** Verify and document steel fabrication per DSA-approved construction documents.	**Periodic**	**SI**	Not applicable to cold-formed steel light-frame construction, except for trusses (**1705A.2.4**).

	S/A3. WELDING:			
	Test or Special Inspection	**Type**	**Performed By**	**Code References and Notes**
☑	**a.** Verify weld filler material identification markings per AWS designation listed on the DSA-approved documents and the WPS.	**Periodic**	**SI**	**1705A.2.5, Table 1705A.2.1 Items 4 & 5**; AWS D1.1 and AWS D1.8 for structural steel; AWS D1.2 for Aluminum; AWS D1.3 for cold-formed steel; AWS D1.4 for reinforcing steel; DSA IR 17-3.
☑	**b.** Verify weld filler material manufacturer's certificate of compliance.	**Periodic**	**SI**	DSA IR 17-3.
☑	**c.** Verify WPS, welder qualifications and equipment.	**Periodic**	**SI**	DSA IR 17-3.

	S/A4. SHOP WELDING (IN ADDITION TO SECTION S/A3):			
	Test or Special Inspection	**Type**	**Performed By**	**Code References and Notes**
☑	**a.** Inspect groove welds, multi-pass fillet welds, single pass fillet welds > 5/16", plug and slot welds.	**Continuous**	**SI**	**Table 1705A.2.1 Items 5a.1–4;** AISC 360-16 (and AISC 341-16 as applicable); DSA IR 17-3.
☑	**b.** Inspect single-pass fillet welds ≤ 5/16", floor and roof deck welds.	**Periodic**	**SI**	**1705A.2.2, Table 1705A.2.1 Items 5a.5 & 5a.6;** AISC 360-16 (and AISC 341-16 as applicable); DSA IR 17-3.

	S/A5. FIELD WELDING (IN ADDITION TO SECTION S/A3):			
	Test or Special Inspection	**Type**	**Performed By**	**Code References and Notes**
☑	**a.** Inspect groove welds, multi-pass fillet welds, single pass fillet welds > 5/16", plug and slot welds.	**Continuous**	**SI**	**Table 1705A.2.1 Items 5a.1–4;** AISC 360-16 (AISC 341-16 as applicable); DSA IR 17-3.
☑	**b.** Inspect single-pass fillet welds ≤ 5/16".	**Periodic**	**SI**	**Table 1705A.2.1 Item 5a.5;** AISC 360-16 (AISC 341-16 as applicable); DSA IR 17-3.

	X1. OTHER:			
	Test or Special Inspection	**Type**	**Performed By**	**Code References and Notes**
☑	**c.** SOLAR PANEL ATTACHMENT	**Continuous**	**LOR**	Pre-tension bolt connections and calibration of test equipment
☑	**d.** SOLAR PANEL ATTACHMENT BOLTS	**Test**	**LOR**	Bolts shall be identified, sampled, and tested in accordance with DSA IR 17-8.19

1. Soils Testing and Inspection: Geotechnical Verified Report Form DSA 293
2. Structural Testing and Inspection: Laboratory Verified Report Form DSA 291
3. Post-installed Anchors: Laboratory Verified Report Form DSA 291, or, for independently contracting SI, Special Inspection Verified Report Form DSA 292
4. Shop Welding Inspection: Laboratory Verified Report Form DSA 291, or, for independently contracting SI, Special Inspection Verified Report Form DSA 292

4 / - SAMPLE DSA-103 - STRUCTURES WITH PIER & SPREAD FOUNDATIONS WITHOUT POST INSTALLED ANCHORS

DSA 103-22: LISTING OF STRUCTURAL TESTS & SPECIAL INSPECTIONS, 2022 CBC

Application Number: 04-122157 | **School Name:** Ultimate Guardian PC-22.6 - Pier & Spread Footing with Post Installed Anchors | **School District:** N/A
DSA File Number: PC-61 | **Increment Number:** | **Date Created:** 2023-04-06

Geotechnical Reports: Project has a geotechnical report, or CDs indicate soils special inspection is required by GE

	S1. GENERAL:			
	Test or Special Inspection	**Type**	**Performed By**	**Code References and Notes**
☑	**a.** Verify that: • Site has been prepared properly prior to placement of controlled fill and/or excavations for foundations. • Foundation excavations are extended to proper depth and have reached proper material. • Materials below footings are adequate to achieve the design bearing capacity.	**Periodic**	**GE***	* By geotechnical engineer or his or her qualified representative. (See Appendix (end of this form) form for exemptions.)

	S4. CAST-IN-PLACE DEEP FOUNDATIONS (PIERS):			
	Test or Special Inspection	**Type**	**Performed By**	**Code References and Note**
☑	**a.** Inspect drilling operations and maintain complete and accurate records for each pier.	**Continuous**	**GE***	* By geotechnical engineer or his or her qualified representative. (See Appendix (end of this form) for exemptions.)
☑	**b.** Verify pier locations, diameters, plumbness, bell diameters (if applicable), lengths and embedment into bedrock (if applicable); record concrete or grout volumes.	**Continuous**	**GE***	* By geotechnical engineer or his or her qualified representative. (See Appendix (end of this form) for exemptions.)
☑	**c.** Confirm adequate end strata bearing capacity.	**Continuous**	**GE***	* By geotechnical engineer or his or her qualified representative. (See Appendix (end of this form) for exemptions.)
☑	**d.** Concrete piers.	Provide tests and inspections per CONCRETE section below.		

	C1. CAST-IN-PLACE CONCRETE			
	Test or Special Inspection	**Type**	**Performed By**	**Code References and Notes**
☑	**a.** Verify use of required design mix.	**Periodic**	**SI**	**Table 1705A.3 Item 5, 1910A.1.**
☑	**b.** Identifiy, sample, and test reinforcing steel.	**Test**	**LOR**	**1910A.2;** ACI 318-19 Ch.20 and Section 26.6.1.2; DSA IR 17-10. (See Appendix (end of this form) for exemptions.)
☑	**c.** During concrete placement, fabricate specimens for strength tests, perform slump and air content tests, and determine the temperature of the concrete.	**Test**	**LOR**	**Table 1705A.3 Item 6**; ACI 318-19 Sections 26.5 & 26.12.
☑	**d.** Test concrete (f'c).	**Test**	**LOR**	**1905A.1.17;** ACI 318-19 Section 26.12.

	C5. POST-INSTALLED ANCHORS:			
	Test or Special Inspection	**Type**	**Performed By**	**Code References and Notes**
☑	**a.** Inspect installation of post-installed anchors	**See Notes**	**SI***	**1617A.1.19, Table 1705A.3 Item 4a (Continuous) & 4b (Periodic), 1705A.3.8** (See Appendix (end of this form) for exemptions). ACI 318-14 Sections 17.8 & 26.13. * May be performed by the project inspector when specifically approved by DSA.
☑	**b.** Test post-installed anchors.	**Test**	**LOR**	**1910A.5.** (See Appendix (end of this form) for exemptions.)

	S/A1. STRUCTURAL STEEL, COLD-FORMED STEEL AND ALUMINUM USED FOR STRUCTURAL PURPOSES			
	Test or Special Inspection	**Type**	**Performed By**	**Code References and Notes**
☑	**a.** Verify identification of all materials and: • Mill certificates indicate material properties that comply with requirements. • Material sizes, types and grades comply with requirements.	**Periodic**	*	**Table 1705A.2.1 Item 3a–3c.** 2202A.1; AISI S100-20 Section A3.1 & A3.2, AISI S240-20 Section A3 & A5, AISI S220-20 Sections A4 & A6. * By special inspector or qualified technician when performed off-site.
☑	**b.** Test unidentified materials	**Test**	**LOR**	**2202A.1.**
☑	**c.** Examine seam welds of HSS shapes	**Periodic**	**SI**	DSA IR 17-3.
☑	**d.** Verify and document steel fabrication per DSA-approved construction documents.	**Periodic**	**SI**	Not applicable to cold-formed steel light-frame construction, except for trusses (**1705A.2.4**).

	S/A3. WELDING:			
	Test or Special Inspection	**Type**	**Performed By**	**Code References and Notes**
☑	**a.** Verify weld filler material identification markings per AWS designation listed on the DSA-approved documents and the WPS.	**Periodic**	**SI**	**1705A.2.5, Table 1705A.2.1 Items 4 & 5**; AWS D1.1 and AWS D1.8 for structural steel; AWS D1.2 for Aluminum; AWS D1.3 for cold-formed steel; AWS D1.4 for reinforcing steel; DSA IR 17-3.
☑	**b.** Verify weld filler material manufacturer's certificate of compliance.	**Periodic**	**SI**	DSA IR 17-3.
☑	**c.** Verify WPS, welder qualifications and equipment.	**Periodic**	**SI**	DSA IR 17-3.

	S/A4. SHOP WELDING (IN ADDITION TO SECTION S/A3):			
	Test or Special Inspection	**Type**	**Performed By**	**Code References and Notes**
☑	**a.** Inspect groove welds, multi-pass fillet welds, single pass fillet welds > 5/16", plug and slot welds.	**Continuous**	**SI**	**Table 1705A.2.1 Items 5a.1–4;** AISC 360-16 (and AISC 341-16 as applicable); DSA IR 17-3.
☑	**b.** Inspect single-pass fillet welds ≤ 5/16", floor and roof deck welds.	**Periodic**	**SI**	**1705A.2.2, Table 1705A.2.1 Items 5a.5 & 5a.6;** AISC 360-16 (and AISC 341-16 as applicable); DSA IR 17-3.

	S/A5. FIELD WELDING (IN ADDITION TO SECTION S/A3):			
	Test or Special Inspection	**Type**	**Performed By**	**Code References and Notes**
☑	**a.** Inspect groove welds, multi-pass fillet welds, single pass fillet welds > 5/16", plug and slot welds.	**Continuous**	**SI**	**Table 1705A.2.1 Items 5a.1–4;** AISC 360-16 (AISC 341-16 as applicable); DSA IR 17-3.
☑	**b.** Inspect single-pass fillet welds ≤ 5/16".	**Periodic**	**SI**	**Table 1705A.2.1 Item 5a.5;** AISC 360-16 (AISC 341-16 as applicable); DSA IR 17-3.

	X1. OTHER:			
	Test or Special Inspection	**Type**	**Performed By**	**Code References and Notes**
☑	**c.** SOLAR PANEL ATTACHMENT	**Continuous**	**LOR**	Pre-tension bolt connections and calibration of test equipment
☑	**d.** SOLAR PANEL ATTACHMENT BOLTS	**Test**	**LOR**	Bolts shall be identified, sampled, and tested in accordance with DSA IR 17-8.19

1. Soils Testing and Inspection: Geotechnical Verified Report Form DSA 293
2. Structural Testing and Inspection: Laboratory Verified Report Form DSA 291
3. Post-installed Anchors: Laboratory Verified Report Form DSA 291, or, for independently contracting SI, Special Inspection Verified Report Form DSA 292
4. Shop Welding Inspection: Laboratory Verified Report Form DSA 291, or, for independently contracting SI, Special Inspection Verified Report Form DSA 292
5. Field Welding Inspection: Laboratory Verified Report Form DSA 291, or, for independently contracting SI, Special Inspection Verified Report Form DSA 292

3 / - SAMPLE DSA-103 - STRUCTURES WITH PIER & SPREAD FOUNDATIONS WITH POST INSTALLED ANCHORS

DSA 103-22: LISTING OF STRUCTURAL TESTS & SPECIAL INSPECTIONS, 2022 CBC

Application Number: 04-122157 | **School Name:** Ultimate Guardian PC-22.6 - Pier Footing without Post Installed Anchors | **School District:** N/A
DSA File Number: PC-61 | **Increment Number:** | **Date Created:** 2023-04-06

Geotechnical Reports: Project has a geotechnical report, or CDs indicate soils special inspection is required by GE

	S1. GENERAL:			
	Test or Special Inspection	**Type**	**Performed By**	**Code References and Notes**
☑	**a.** Verify that: • Site has been prepared properly prior to placement of controlled fill and/or excavations for foundations. • Foundation excavations are extended to proper depth and have reached proper material. • Materials below footings are adequate to achieve the design bearing capacity.	**Periodic**	**GE***	* By geotechnical engineer or his or her qualified representative. (See Appendix (end of this form) form for exemptions.)

	S4. CAST-IN-PLACE DEEP FOUNDATIONS (PIERS):			
	Test or Special Inspection	**Type**	**Performed By**	**Code References and Note**
☑	**a.** Inspect drilling operations and maintain complete and accurate records for each pier.	**Continuous**	**GE***	* By geotechnical engineer or his or her qualified representative. (See Appendix (end of this form) for exemptions.)
☑	**b.** Verify pier locations, diameters, plumbness, bell diameters (if applicable), lengths and embedment into bedrock (if applicable); record concrete or grout volumes.	**Continuous**	**GE***	* By geotechnical engineer or his or her qualified representative. (See Appendix (end of this form) for exemptions.)
☑	**c.** Confirm adequate end strata bearing capacity.	**Continuous**	**GE***	* By geotechnical engineer or his or her qualified representative. (See Appendix (end of this form) for exemptions.)
☑	**d.** Concrete piers.	Provide tests and inspections per CONCRETE section below.		

	C1. CAST-IN-PLACE CONCRETE			
	Test or Special Inspection	**Type**	**Performed By**	**Code References and Notes**
☑	**a.** Verify use of required design mix.	**Periodic**	**SI**	**Table 1705A.3 Item 5, 1910A.1.**
☑	**b.** Identifiy, sample, and test reinforcing steel.	**Test**	**LOR**	**1910A.2;** ACI 318-19 Ch.20 and Section 26.6.1.2; DSA IR 17-10. (See Appendix (end of this form) for exemptions.)
☑	**c.** During concrete placement, fabricate specimens for strength tests, perform slump and air content tests, and determine the temperature of the concrete.	**Test**	**LOR**	**Table 1705A.3 Item 6**; ACI 318-19 Sections 26.5 & 26.12.
☑	**d.** Test concrete (f'c).	**Test**	**LOR**	**1905A.1.17;** ACI 318-19 Section 26.12.

	S/A1. STRUCTURAL STEEL, COLD-FORMED STEEL AND ALUMINUM USED FOR STRUCTURAL PURPOSES			
	Test or Special Inspection	**Type**	**Performed By**	**Code References and Notes**
☑	**a.** Verify identification of all materials and: • Mill certificates indicate material properties that comply with requirements. • Material sizes, types and grades comply with requirements.	**Periodic**	*	**Table 1705A.2.1 Item 3a–3c.** 2202A.1; AISI S100-20 Section A3.1 & A3.2, AISI S240-20 Section A3 & A5, AISI S220-20 Sections A4 & A6. * By special inspector or qualified technician when performed off-site.
☑	**b.** Test unidentified materials	**Test**	**LOR**	**2202A.1.**
☑	**c.** Examine seam welds of HSS shapes	**Periodic**	**SI**	DSA IR 17-3.
☑	**d.** Verify and document steel fabrication per DSA-approved construction documents.	**Periodic**	**SI**	Not applicable to cold-formed steel light-frame construction, except for trusses (**1705A.2.4**).

	S/A3. WELDING:			
	Test or Special Inspection	**Type**	**Performed By**	**Code References and Notes**
☑	**a.** Verify weld filler material identification markings per AWS designation listed on the DSA-approved documents and the WPS.	**Periodic**	**SI**	**1705A.2.5, Table 1705A.2.1 Items 4 & 5**; AWS D1.1 and AWS D1.8 for structural steel; AWS D1.2 for Aluminum; AWS D1.3 for cold-formed steel; AWS D1.4 for reinforcing steel; DSA IR 17-3.
☑	**b.** Verify weld filler material manufacturer's certificate of compliance.	**Periodic**	**SI**	DSA IR 17-3.
☑	**c.** Verify WPS, welder qualifications and equipment.	**Periodic**	**SI**	DSA IR 17-3.

	S/A4. SHOP WELDING (IN ADDITION TO SECTION S/A3):			
	Test or Special Inspection	**Type**	**Performed By**	**Code References and Notes**
☑	**a.** Inspect groove welds, multi-pass fillet welds, single pass fillet welds > 5/16", plug and slot welds.	**Continuous**	**SI**	**Table 1705A.2.1 Items 5a.1–4;** AISC 360-16 (and AISC 341-16 as applicable); DSA IR 17-3.
☑	**b.** Inspect single-pass fillet welds ≤ 5/16", floor and roof deck welds.	**Periodic**	**SI**	**1705A.2.2, Table 1705A.2.1 Items 5a.5 & 5a.6;** AISC 360-16 (and AISC 341-16 as applicable); DSA IR 17-3.

	S/A5. FIELD WELDING (IN ADDITION TO SECTION S/A3):			
	Test or Special Inspection	**Type**	**Performed By**	**Code References and Notes**
☑	**a.** Inspect groove welds, multi-pass fillet welds, single pass fillet welds > 5/16", plug and slot welds.	**Continuous**	**SI**	**Table 1705A.2.1 Items 5a.1–4;** AISC 360-16 (AISC 341-16 as applicable); DSA IR 17-3.
☑	**b.** Inspect single-pass fillet welds ≤ 5/16".	**Periodic**	**SI**	**Table 1705A.2.1 Item 5a.5;** AISC 360-16 (AISC 341-16 as applicable); DSA IR 17-3.

	X1. OTHER:			
	Test or Special Inspection	**Type**	**Performed By**	**Code References and Notes**
☑	**c.** SOLAR PANEL ATTACHMENT	**Continuous**	**LOR**	Pre-tension bolt connections and calibration of test equipment
☑	**d.** SOLAR PANEL ATTACHMENT BOLTS	**Test**	**LOR**	Bolts shall be identified, sampled, and tested in accordance with DSA IR 17-8.19

1. Soils Testing and Inspection: Geotechnical Verified Report Form DSA 293
2. Structural Testing and Inspection: Laboratory Verified Report Form DSA 291
3. Post-installed Anchors: Laboratory Verified Report Form DSA 291, or, for independently contracting SI, Special Inspection Verified Report Form DSA 292
4. Shop Welding Inspection: Laboratory Verified Report Form DSA 291, or, for independently contracting SI, Special Inspection Verified Report Form DSA 292

2 / - SAMPLE DSA-103 - STRUCTURES WITH ONLY PIER FOUNDATIONS WITHOUT POST INSTALLED ANCHORS

DSA 103-22: LISTING OF STRUCTURAL TESTS & SPECIAL INSPECTIONS, 2022 CBC

Application Number: 04-122157 | **School Name:** Ultimate Guardian PC-22.6 - Spread Footing without Post Installed Anchors | **School District:** N/A
DSA File Number: PC-61 | **Increment Number:** | **Date Created:** 2023-04-06

Geotechnical Reports: Project has a geotechnical report, or CDs indicate soils special inspection is required by GE

	S1. GENERAL:			
	Test or Special Inspection	**Type**	**Performed By**	**Code References and Notes**
☑	**a.** Verify that: • Site has been prepared properly prior to placement of controlled fill and/or excavations for foundations. • Foundation excavations are extended to proper depth and have reached proper material. • Materials below footings are adequate to achieve the design bearing capacity.	**Periodic**	**GE***	* By geotechnical engineer or his or her qualified representative. (See Appendix (end of this form) form for exemptions.)

	C1. CAST-IN-PLACE CONCRETE			
	Test or Special Inspection	**Type**	**Performed By**	**Code References and Notes**
☑	**a.** Verify use of required design mix.	**Periodic**	**SI**	**Table 1705A.3 Item 5, 1910A.1.**
☑	**b.** Identifiy, sample, and test reinforcing steel.	**Test**	**LOR**	**1910A.2;** ACI 318-19 Ch.20 and Section 26.6.1.2; DSA IR 17-10. (See Appendix (end of this form) for exemptions.)
☑	**c.** During concrete placement, fabricate specimens for strength tests, perform slump and air content tests, and determine the temperature of the concrete.	**Test**	**LOR**	**Table 1705A.3 Item 6**; ACI 318-19 Sections 26.5 & 26.12.
☑	**d.** Test concrete (f'c).	**Test**	**LOR**	**1905A.1.17;** ACI 318-19 Section 26.12.

	S/A1. STRUCTURAL STEEL, COLD-FORMED STEEL AND ALUMINUM USED FOR STRUCTURAL PURPOSES			
	Test or Special Inspection	**Type**	**Performed By**	**Code References and Notes**
☑	**a.** Verify identification of all materials and: • Mill certificates indicate material properties that comply with requirements. • Material sizes, types and grades comply with requirements.	**Periodic**	*	**Table 1705A.2.1 Item 3a–3c.** 2202A.1; AISI S100-20 Section A3.1 & A3.2, AISI S240-20 Section A3 & A5, AISI S220-20 Sections A4 & A6. * By special inspector or qualified technician when performed off-site.
☑	**b.** Test unidentified materials	**Test**	**LOR**	**2202A.1.**
☑	**c.** Examine seam welds of HSS shapes	**Periodic**	**SI**	DSA IR 17-3.
☑	**d.** Verify and document steel fabrication per DSA-approved construction documents.	**Periodic**	**SI**	Not applicable to cold-formed steel light-frame construction, except for trusses (**1705A.2.4**).

	S/A3. WELDING:			
	Test or Special Inspection	**Type**	**Performed By**	**Code References and Notes**
☑	**a.** Verify weld filler material identification markings per AWS designation listed on the DSA-approved documents and the WPS.	**Periodic**	**SI**	**1705A.2.5, Table 1705A.2.1 Items 4 & 5**; AWS D1.1 and AWS D1.8 for structural steel; AWS D1.2 for Aluminum; AWS D1.3 for cold-formed steel; AWS D1.4 for reinforcing steel; DSA IR 17-3.
☑	**b.** Verify weld filler material manufacturer's certificate of compliance.	**Periodic**	**SI**	DSA IR 17-3.
☑	**c.** Verify WPS, welder qualifications and equipment.	**Periodic**	**SI**	DSA IR 17-3.

	S/A4. SHOP WELDING (IN ADDITION TO SECTION S/A3):			
	Test or Special Inspection	**Type**	**Performed By**	**Code References and Notes**
☑	**a.** Inspect groove welds, multi-pass fillet welds, single pass fillet welds > 5/16", plug and slot welds.	**Continuous**	**SI**	**Table 1705A.2.1 Items 5a.1–4;** AISC 360-16 (and AISC 341-16 as applicable); DSA IR 17-3.
☑	**b.** Inspect single-pass fillet welds ≤ 5/16", floor and roof deck welds.	**Periodic**	**SI**	**1705A.2.2, Table 1705A.2.1 Items 5a.5 & 5a.6;** AISC 360-16 (and AISC 341-16 as applicable); DSA IR 17-3.

	S/A5. FIELD WELDING (IN ADDITION TO SECTION S/A3):			
	Test or Special Inspection	**Type**	**Performed By**	**Code References and Notes**
☑	**a.** Inspect groove welds, multi-pass fillet welds, single pass fillet welds > 5/16", plug and slot welds.	**Continuous**	**SI**	**Table 1705A.2.1 Items 5a.1–4;** AISC 360-16 (AISC 341-16 as applicable); DSA IR 17-3.
☑	**b.** Inspect single-pass fillet welds ≤ 5/16".	**Periodic**	**SI**	**Table 1705A.2.1 Item 5a.5;** AISC 360-16 (AISC 341-16 as applicable); DSA IR 17-3.

	X1. OTHER:			
	Test or Special Inspection	**Type**	**Performed By**	**Code References and Notes**
☑	**c.** SOLAR PANEL ATTACHMENT	**Continuous**	**LOR**	Pre-tension bolt connections and calibration of test equipment
☑	**d.** SOLAR PANEL ATTACHMENT BOLTS	**Test**	**LOR**	Bolts shall be identified, sampled, and tested in accordance with DSA IR 17-8.19

1. Soils Testing and Inspection: Geotechnical Verified Report Form DSA 293
2. Structural Testing and Inspection: Laboratory Verified Report Form DSA 291
3. Post-installed Anchors: Laboratory Verified Report Form DSA 291, or, for independently contracting SI, Special Inspection Verified Report Form DSA 292
4. Shop Welding Inspection: Laboratory Verified Report Form DSA 291, or, for independently contracting SI, Special Inspection Verified Report Form DSA 292

6 / - SAMPLE DSA-103 - STRUCTURES WITH ONLY SPREAD FOUNDATIONS WITHOUT POST INSTALLED ANCHORS

DSA 103-22: LISTING OF STRUCTURAL TESTS & SPECIAL INSPECTIONS, 2022 CBC

Application Number: 04-122157 | **School Name:** Ultimate Guardian PC-22.6 - Pier Footing with Post Installed Anchors | **School District:** N/A
DSA File Number: PC-61 | **Increment Number:** | **Date Created:** 2023-04-06

Geotechnical Reports: Project has a geotechnical report, or CDs indicate soils special inspection is required by GE

	S1. GENERAL:			
	Test or Special Inspection	**Type**	**Performed By**	**Code References and Notes**
☑	**a.** Verify that: • Site has been prepared properly prior to placement of controlled fill and/or excavations for foundations. • Foundation excavations are extended to proper depth and have reached proper material. • Materials below footings are adequate to achieve the design bearing capacity.	**Periodic**	**GE***	* By geotechnical engineer or his or her qualified representative. (See Appendix (end of this form) form for exemptions.)

	S4. CAST-IN-PLACE DEEP FOUNDATIONS (PIERS):			
	Test or Special Inspection	**Type**	**Performed By**	**Code References and Note**
☑	**a.** Inspect drilling operations and maintain complete and accurate records for each pier.	**Continuous**	**GE***	* By geotechnical engineer or his or her qualified representative. (See Appendix (end of this form) for exemptions.)
☑	**b.** Verify pier locations, diameters, plumbness, bell diameters (if applicable), lengths and embedment into bedrock (if applicable); record concrete or grout volumes.	**Continuous**	**GE***	* By geotechnical engineer or his or her qualified representative. (See Appendix (end of this form) for exemptions.)
☑	**c.** Confirm adequate end strata bearing capacity.	**Continuous**	**GE***	* By geotechnical engineer or his or her qualified representative. (See Appendix (end of this form) for exemptions.)
☑	**d.** Concrete piers.	Provide tests and inspections per CONCRETE section below.		

	C1. CAST-IN-PLACE CONCRETE			
	Test or Special Inspection	**Type**	**Performed By**	**Code References and Notes**
☑	**a.** Verify use of required design mix.	**Periodic**	**SI**	**Table 1705A.3 Item 5, 1910A.1.**
☑	**b.** Identifiy, sample, and test reinforcing steel.	**Test**	**LOR**	**1910A.2;** ACI 318-19 Ch.20 and Section 26.6.1.2; DSA IR 17-10. (See Appendix (end of this form) for exemptions.)
☑	**c.** During concrete placement, fabricate specimens for strength tests, perform slump and air content tests, and determine the temperature of the concrete.	**Test**	**LOR**	**Table 1705A.3 Item 6**; ACI 318-19 Sections 26.5 & 26.12.
☑	**d.** Test concrete (f'c).	**Test**	**LOR**	**1905A.1.17;** ACI 318-19 Section 26.12.

	C5. POST-INSTALLED ANCHORS:			
	Test or Special Inspection	**Type**	**Performed By**	**Code References and Notes**
☑	**a.** Inspect installation of post-installed anchors	**See Notes**	**SI***	**1617A.1.19, Table 1705A.3 Item 4a (Continuous) & 4b (Periodic), 1705A.3.8** (See Appendix (end of this form) for exemptions). ACI 318-14 Sections 17.8 & 26.13. * May be performed by the project inspector when specifically approved by DSA.
☑	**b.** Test post-installed anchors.	**Test**	**LOR**	**1910A.5.** (See Appendix (end of this form) for exemptions.)

	S/A1. STRUCTURAL STEEL, COLD-FORMED STEEL AND ALUMINUM USED FOR STRUCTURAL PURPOSES			
	Test or Special Inspection	**Type**	**Performed By**	**Code References and Notes**
☑	**a.** Verify identification of all materials and: • Mill certificates indicate material properties that comply with requirements. • Material sizes, types and grades comply with requirements.	**Periodic**	*	**Table 1705A.2.1 Item 3a–3c.** 2202A.1; AISI S100-20 Section A3.1 & A3.2, AISI S240-20 Section A3 & A5, AISI S220-20 Sections A4 & A6. * By special inspector or qualified technician when performed off-site.
☑	**b.** Test unidentified materials	**Test**	**LOR**	**2202A.1.**
☑	**c.** Examine seam welds of HSS shapes	**Periodic**	**SI**	DSA IR 17-3.
☑	**d.** Verify and document steel fabrication per DSA-approved construction documents.	**Periodic**	**SI**	Not applicable to cold-formed steel light-frame construction, except for trusses (**1705A.2.4**).

	S/A3. WELDING:			
	Test or Special Inspection	**Type**	**Performed By**	**Code References and Notes**
☑	**a.** Verify weld filler material identification markings per AWS designation listed on the DSA-approved documents and the WPS.	**Periodic**	**SI**	**1705A.2.5, Table 1705A.2.1 Items 4 & 5**; AWS D1.1 and AWS D1.8 for structural steel; AWS D1.2 for Aluminum; AWS D1.3 for cold-formed steel; AWS D1.4 for reinforcing steel; DSA IR 17-3.
☑	**b.** Verify weld filler material manufacturer's certificate of compliance.	**Periodic**	**SI**	DSA IR 17-3.
☑	**c.** Verify WPS, welder qualifications and equipment.	**Periodic**	**SI**	DSA IR 17-3.

	S/A4. SHOP WELDING (IN ADDITION TO SECTION S/A3):			
	Test or Special Inspection	**Type**	**Performed By**	**Code References and Notes**
☑	**a.** Inspect groove welds, multi-pass fillet welds, single pass fillet welds > 5/16", plug and slot welds.	**Continuous**	**SI**	**Table 1705A.2.1 Items 5a.1–4;** AISC 360-16 (and AISC 341-16 as applicable); DSA IR 17-3.
☑	**b.** Inspect single-pass fillet welds ≤ 5/16", floor and roof deck welds.	**Periodic**	**SI**	**1705A.2.2, Table 1705A.2.1 Items 5a.5 & 5a.6;** AISC 360-16 (and AISC 341-16 as applicable); DSA IR 17-3.

	S/A5. FIELD WELDING (IN ADDITION TO SECTION S/A3):			
	Test or Special Inspection	**Type**	**Performed By**	**Code References and Notes**
☑	**a.** Inspect groove welds, multi-pass fillet welds, single pass fillet welds > 5/16", plug and slot welds.	**Continuous**	**SI**	**Table 1705A.2.1 Items 5a.1–4;** AISC 360-16 (AISC 341-16 as applicable); DSA IR 17-3.
☑	**b.** Inspect single-pass fillet welds ≤ 5/16".	**Periodic**	**SI**	**Table 1705A.2.1 Item 5a.5;** AISC 360-16 (AISC 341-16 as applicable); DSA IR 17-3.

	X1. OTHER:			
	Test or Special Inspection	**Type**	**Performed By**	**Code References and Notes**
☑	**c.** SOLAR PANEL ATTACHMENT	**Continuous**	**LOR**	Pre-tension bolt connections and calibration of test equipment
☑	**d.** SOLAR PANEL ATTACHMENT BOLTS	**Test**	**LOR**	Bolts shall be identified, sampled, and tested in accordance with DSA IR 17-8.19

1. Soils Testing and Inspection: Geotechnical Verified Report Form DSA 293
2. Structural Testing and Inspection: Laboratory Verified Report Form DSA 291
3. Post-installed Anchors: Laboratory Verified Report Form DSA 291, or, for independently contracting SI, Special Inspection Verified Report Form DSA 292
4. Shop Welding Inspection: Laboratory Verified Report Form DSA 291, or, for independently contracting SI, Special Inspection Verified Report Form DSA 292
5. Field Welding Inspection: Laboratory Verified Report Form DSA 291, or, for independently contracting SI, Special Inspection Verified Report Form DSA 292

1 / - SAMPLE DSA-103 - STRUCTURES WITH ONLY PIER FOUNDATIONS WITH POST INSTALLED ANCHORS

THE EXAMPLE FORM DSA-103'S SHOWN ON THIS SHEET ARE FOR ILLUSTRATION PURPOSES ONLY TO ASSIST IN THE COMPLETION OF FUTURE PROJECT-SPECIFIC FORM DSA-103'S. A FORM DSA-103 IS TO BE COMPLETED FOR EACH APPLICATION THAT THIS PC IS BEING INCORPORATED INTO AND ALL EXAMPLE FORM DSA-103'S ARE TO BE CROSSED OUT ON THIS DRAWING

IDENTIFICATION STAMP
DIV. OF THE STATE ARCHITECT
APP: 03-125900 INC:
REVIEWED FOR
SS ☑ FLS ☑ ACS ☑
DATE: 03/18/2026

4 STEL ENGINEERING
26030 ACERO
MISSION VIEJO, CA 92691
949.305.1150 | FAX 949.305.1420

M BAR C CONSTRUCTION INC.
1770 LA COSTA MEADOWS DRIVE
SAN MARCOS, CA 92078
ERIK KRIVOKOPICH
PHONE: (760) 744-4131
FAX: (760) 744-4449
ERIK@MBARCONLINE.COM
LIC # 869960
B AND C51
(775) 787-8845

ENGINEER'S APPROVAL
REGISTERED PROFESSIONAL ENGINEER
DUSTIN K. ROSEPINK
S 5885
STRUCTURAL
STATE OF CALIFORNIA

BID INFORMATION
THE STRUCTURES AND DESIGNS IN THIS PC ARE PROPRIETARY TO M BAR C CONSTRUCTION, INC. AND 4 S.T.E.L. ENGINEERING, INC. ALL SITES USING THIS PC: M BAR C CONSTRUCTION, INC. SHALL BE THE STEEL CONTRACTOR & 4 S.T.E.L. ENGINEERING, INC. SHALL BE THE SEOR. SEE THE STANDARD NOTES FOR PC USE ON S-1 FOR ADDITIONAL REQUIREMENTS.

PRE-CHECK (PC) DOCUMENT
CODE: 2022 CBC
A SEPARATE PROJECT APPLICATION FOR CONSTRUCTION IS REQUIRED

APPROVED
DIV. OF THE STATE ARCHITECT
APP: 04-123955 PC
REVIEWED FOR
SS ☑ FLS ☑ ACS ☑ CG ☐
DATE: 10/14/2024

SITE SPECIFIC INFORMATION
ALTADENA ELEMENTARY SCHOOL
743 E CALAVERAS ST.
ALTADENA, CA 91001

REVISIONS

MARK	DATE	DESCRIPTION

4 STEL JOB # MC02-V3-6
DATE 10-03-24
DRAWN BY GM
CHECKED RWS
UG 22.6.1
SAMPLE DSA-103 FORMS
S-4

DRAWINGS, SPECIFICATIONS AND OTHER DOCUMENTS, PREPARED BY THE DESIGN PROFESSIONAL (DP) AND THE DP'S CONSULTANTS ARE INSTRUMENTS OF SERVICE FOR USE SOLELY WITH RESPECT TO THIS PROJECT. THIS INCLUDES DOCUMENTS IN ELECTRONIC FORM. THE DP AND THE DP'S CONSULTANTS SHALL BE DEEMED THE AUTHORS AND OWNERS OF THEIR RESPECTIVE INSTRUMENTS OF SERVICE AND SHALL RETAIN ALL COMMON LAW, STATUTORY AND OTHER RESERVED RIGHTS, INCLUDING COPYRIGHTS. THE INSTRUMENTS OF SERVICE SHALL NOT BE USED BY THE OWNER FOR FUTURE ADDITIONS OR ALTERATIONS TO THIS PROJECT OR FOR OTHER PROJECTS, WITHOUT THE PRIOR WRITTEN AGREEMENT OF THE DP. ANY UNAUTHORIZED USE OF THE INSTRUMENTS OF SERVICE SHALL BE AT THE OWNER'S SOLE RISK AND WITHOUT LIABILITY TO THE DP AND THE DP'S CONSULTANTS.

NOTE: IF DWG. IS NOT 24 x 36, IT IS NOT FULL SIZE

USE	SECTION NAME	D (in)	B (in)	L (in)	GA	WT (lb/ft)	A (in^2)	AXIS X-X			AXIS Y-Y		
								I_x (in^4)	S_{xc} (in^3)	r_x (in)	I_y (in^4)	S_y (in^3)	r_y (in)
☐	CS5 x 2.5 x 0.057	5	2.5	0.625	16	2.086	0.613	2.513	0.819	2.025	0.520	0.322	0.929
☐	CS7 x 2.5 x 0.057	7	2.5	0.625	16	[illegible]	0.726	5.462	1.288	2.743	0.590	0.334	0.902
☐	CS7 x 2.5 x 0.071	7	2.5	0.625	14	3.086	0.907	6.768	1.934	2.732	0.723	0.402	0.893
☒	CS9 x 2.5 x 0.057	9	2.5	0.625	16	2.856	0.839	9.864	1.630	3.428	0.635	0.341	0.870
☐	CS11 x 2.5 x 0.057	11	2.5	0.625	16	3.241	0.953	15.945	2.245	4.091	0.669	0.347	0.838

NOTES:

1. COLD FORMED STEEL (CFS) BLOCKING MATERIAL SHALL CONFORM TO ASTM A653 SS GRADE 55 (F_y = 55 KSI, F_u = 70 KSI) OR ASTM A1011 SS GRADE 55 (F_y = 55 KSI, F_u = 70 KSI).
2. COLD FORMED STEEL (CFS) DESIGNED PER 2012 AISI SPECIFICATIONS AND COLD-FORMED STEEL DESIGN MANUAL.
3. CFS SECTION PROPERTIES LISTED ABOVE ARE MINIMUM SECTION PROPERTIES REQUIRED PER THE LATEST STEEL FRAMING INDUSTRY ASSOCIATION (SFIA) PRODUCT TECHNICAL GUIDE. ACTUAL MANUFACTURER'S PROPERTIES MUST MEET OR EXCEED SFIA PROPERTIES.

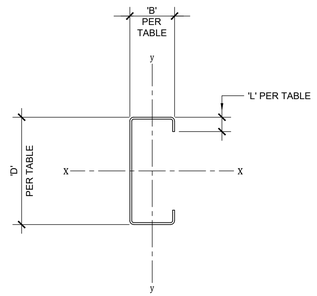

3 - PURLIN BLOCKING AND BRACING
COLD FORMED C-SECTIONS
N.T.S.

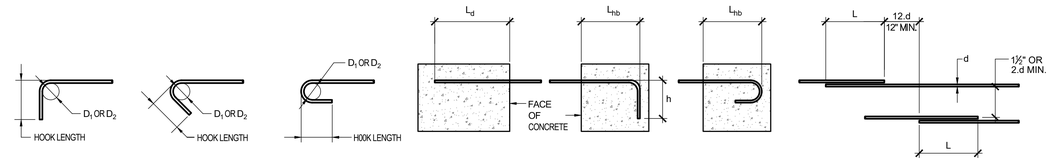

90° BEND | 135° BEND | 180° BEND | STRAIGHT BAR | 90° HOOK | 180° HOOK

FINISHED BEND DIAMETERS		
BAR SIZE	D_1	D_2
#3	1½"	2¼"
#4	2"	3"
#5	2½"	3¾"
#6, #7, #8	6.d	6.d

"D_1" - FINISHED BEND DIA. FOR STIRRUP & TIE HOOKS.
"D_2" - BEND DIA. FOR STD HOOKS.
"d" - BAR DIAMETER

STANDARD HOOK LENGTHS				
BAR SIZE	MAIN REINFT.		STIRRUP & TIE HOOKS	
	90°	180°	90°	135°
#3	6"	4"	3½"	4¼"
#4	8"	4½"	4½"	4½"
#5	10"	5"	6"	6"
#6	12"	6"	12"	7½"
#7	14"	7"	14"	9"
#8	16"	8"	16"	10"

A STANDARD HOOKS

REINFORCEMENT DEVELOPMENT LENGTHS				
CONCRETE STRENGTH		F'_C = 3,000 PSI		
NOMINAL BAR SIZE	h	L_d		L_{hb}
		TOP BARS	OTHER BARS	
#3	6"	1'-10"	1'-5"	9"
#4	8"	2'-5"	1'-10"	11"
#5	10"	3'-0"	2'-4"	1'-2"
#6	1'-0"	3'-7"	2'-9"	1'-5"
#7	1'-2"	5'-3"	4'-0"	1'-7"
#8	1'-4"	6'-0"	4'-7"	1'-10"

NOTES:

1. TOP BARS ARE HORIZONTAL BARS WITH MORE THAN 12 INCHES OF CONCRETE CAST BELOW.

B DEVELOPMENT LENGTHS

REINFORCEMENT LAP SPLICE LENGTH 'L'		
CONCRETE STRENGTH	F'_C=3,000 PSI	
NOMINAL BAR SIZE	TOP BARS	OTHER BARS
#3	2'-4"	1'-10"
#4	3'-2"	2'-5"
#5	3'-11"	3'-0"
#6	4'-8"	3'-7"
#7	6'-9"	5'-3"
#8	7'-9"	6'-0"

NOTES:

1. LAP SPLICE SHALL BE INCREASED 50% WHERE CLEAR SPACE BETWEEN BARS IS LESS THAN 2 BAR DIAMETERS AND/OR THE CLEAR COVER IS LESS THAN ONE BAR DIAMETER.

C OFFSETS AND LAP SPLICES

1 - TYPICAL REINFORCEMENT BAR BENDS ~~AND LAPS~~
N.T.S.

USE	SECTION NAME	D (in)	B (in)	t (in)	WT (lb/ft)	A (in^2)	AXIS X-X			AXIS Y-Y		
							I_x (in^4)	Z_x (in^3)	r_x (in)	I_y (in^4)	Z_y (in^3)	r_y (in)
☐	HSS 12 x 8 x $^1/_4$	12	8	0.250	32.630	9.590	196.000	39.100	4.520	105.000	29.600	3.310
☐	HSS 12 x 8 x $^5/_{16}$	12	8	0.313	40.350	11.900	239.000	48.000	4.480	128.000	36.400	3.280
☐	HSS 12 x 8 x $^3/_8$	12	8	0.375	47.900	14.000	279.000	56.500	4.450	149.000	35.100	3.250
☐	HSS 12 x 8 x $^1/_2$	12	8	0.500	62.460	18.400	353.000	72.400	4.380	188.000	54.700	3.200
☐	HSS 14 x 10 x $^1/_4$	14	10	0.250	39.430	11.600	331.000	56.000	5.340	198.000	44.600	4.130
☒	HSS 14 x 10 x $^5/_{16}$	14	10	0.313	48.860	14.400	406.000	69.100	5.310	242.000	55.000	4.100
☐	HSS 14 x 10 x $^3/_8$	14	10	0.375	58.100	17.100	476.000	81.500	5.280	284.000	64.800	4.080
☐	HSS 14 x 10 x $^1/_4$	14	10	0.500	76.070	22.400	608.000	105.000	5.210	361.000	83.600	4.010
☒	HSS 14 x 10 x $^5/_8$	14	10	0.625	93.340	27.400	728.000	127.000	5.150	431.000	101.000	3.970

NOTES

1. HSS BEAMS AND COLUMNS SHALL CONFORM TO ASTM A1085, F_y=50 ksi.

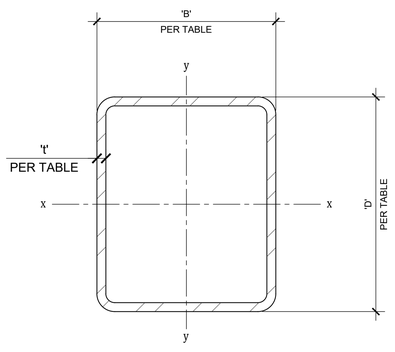

4 - HOLLOW STRUCTURAL SECTIONS
N.T.S.

USE	SECTION NAME	D (in)	B (in)	L (in)	GA	WT (lb/ft)	A (in^2)	AXIS X-X			AXIS Y-Y		
								I_x (in^4)	S_{xc} (in^3)	r_x (in)	I_y (in^4)	S_y (in^3)	r_y (in)
☐	CS8 x 4 x 0.071	8	4	1.000	14	4.240	1.246	13.167	2.656	3.251	2.797	1.060	1.498
☐	CS10 x 3.5 x 0.102	10	3.5	0.875	12	6.310	1.855	28.148	5.118	3.895	2.992	1.207	1.270
☐	CS10 x 4 x 0.071	10	4	1.000	14	4.720	1.388	21.961	3.424	3.977	3.009	1.086	1.472
☐	CS10 x 4 x 0.102	10	4	1.000	12	6.650	1.957	30.639	5.255	3.957	4.137	1.499	1.454
☐	CS12 x 3.5 x 0.102	12	3.5	1.000	12	7.010	2.059	43.269	6.590	4.584	3.159	1.244	1.239
☐	CS12 x 4 x 0.071	12	4	1.000	14	5.210	1.531	33.532	4.082	4.680	3.183	1.105	1.442
☒	CS12 x 4 x 0.102	12	4	1.000	12	7.350	2.161	46.868	6.761	4.658	4.376	1.527	1.423
☐	CS14 x 3.5 x 0.071	14	3.5	1.000	14	5.450	1.602	44.707	4.799	5.283	2.406	0.915	1.226

NOTES:

1. COLD FORMED STEEL (CFS) PURLIN MATERIAL SHALL CONFORM TO ASTM A653 SS GRADE 55 (F_y = 55 KSI, F_U = 70 KSI) OR ASTM A1011 SS GRADE 55 (F_y = 55 KSI, F_U = 70 KSI).
2. COLD FORMED STEEL (CFS) DESIGNED PER 2012 AISI SPECIFICATIONS AND AISI COLD-FORMED STEEL DESIGN MANUAL.
3. CFS SECTION PROPERTIES LISTED ABOVE ARE MINIMUM SECTION PROPERTIES REQUIRED PER THE LATEST STEEL FRAMING INDUSTRY ASSOCIATION (SFIA) PRODUCT TECHNICAL GUIDE. ACTUAL MANUFACTURER'S PROPERTIES MUST MEET OR EXCEED SFIA PROPERTIES.

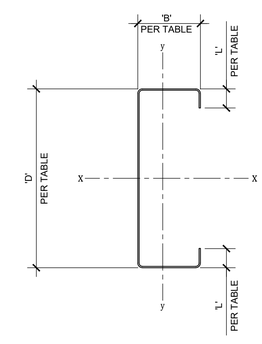

2 - PURLINS
COLD FORMED C-SECTIONS
N.T.S.

IDENTIFICATION STAMP
DIV. OF THE STATE ARCHITECT
APP: 03-125900 INC:
REVIEWED FOR
SS ☑ FLS ☑ ACS ☑
DATE: 03/18/2026

4 STEEL ENGINEERING
26030 ACERO
MISSION VIEJO, CA 92691
949.305.1150 | FAX 949.305.1420

M BAR C CONSTRUCTION INC.
1770 LA COSTA MEADOWS DRIVE
SAN MARCOS, CA 92078
ERIK KRIVOKOPICH
PHONE: (760) 744-4131
FAX: (760) 744-4449
ERIK@MBARCCONLINE.COM
LIC # 861960
B AND C51
(770) 787-8845

ENGINEER'S APPROVAL

REGISTERED PROFESSIONAL ENGINEER
DUSTIN K. ROSENTHAL
S 5885
Exp. 12-31-26
STATE OF CALIFORNIA

BID INFORMATION

THE STRUCTURES AND DESIGNS IN THIS PC ARE PROPRIETARY TO M BAR C CONSTRUCTION, INC. AND 4 S.T.E.L. ENGINEERING, INC. ALL SITES USING THIS PC: M BAR C CONSTRUCTION, INC. SHALL BE THE STEEL CONTRACTOR & 4 S.T.E.L. ENGINEERING, INC. SHALL BE THE SEOR. SEE THE STANDARD NOTES FOR PC USE ON S-1 FOR ADDITIONAL REQUIREMENTS.

PRE-CHECK (PC) DOCUMENT

CODE: 2022 CBC

A SEPARATE PROJECT APPLICATION FOR CONSTRUCTION IS REQUIRED

APPROVED
DIV. OF THE STATE ARCHITECT
APP: 04-123955 PC
REVIEWED FOR
SS ☑ FLS ☑ ACS ☑ CG ☐
DATE: 10/14/2024

SITE SPECIFIC INFORMATION

ALTADENA ELEMENTARY SCHOOL
743 E CALAVERAS ST.
ALTADENA, CA 91001

REVISIONS

MARK	DATE	DESCRIPTION

4 STEL JOB #	MC02-V3-6
DATE	10-03-24
DRAWN BY	GM
CHECKED	RWS

UG 22.6.1

SECTION PROPERTIES & REBAR DETAILS

S-5

DRAWINGS, SPECIFICATIONS AND OTHER DOCUMENTS, PREPARED BY THE DESIGN PROFESSIONAL (DP) AND THE DP'S CONSULTANTS ARE INSTRUMENTS OF SERVICE FOR USE SOLELY WITH RESPECT TO THIS PROJECT. THIS INCLUDES DOCUMENTS IN ELECTRONIC FORM. THE DP AND THE DP'S CONSULTANTS SHALL BE DEEMED THE AUTHORS AND OWNERS OF THEIR RESPECTIVE INSTRUMENTS OF SERVICE AND SHALL RETAIN ALL COMMON LAW, STATUTORY AND OTHER RESERVED RIGHTS, INCLUDING COPYRIGHTS. THE INSTRUMENTS OF SERVICE SHALL NOT BE USED BY THE OWNER FOR FUTURE ADDITIONS OR ALTERATIONS TO THIS PROJECT OR FOR OTHER PROJECTS, WITHOUT THE PRIOR WRITTEN AGREEMENT OF THE DP. ANY UNAUTHORIZED USE OF THE INSTRUMENTS OF SERVICE SHALL BE AT THE OWNER'S SOLE RISK AND WITHOUT LIABILITY TO THE DP AND THE DP'S CONSULTANTS.

NOTE: IF DWG. IS NOT 24 x 36, IT IS NOT FULL SIZE

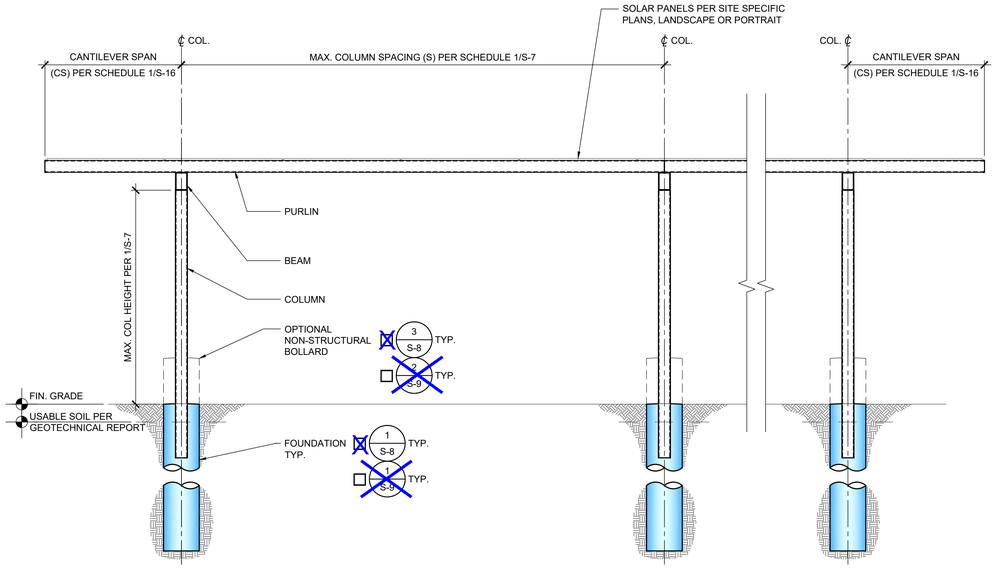

3 - T-STRUCTURE - TYPICAL SIDE ELEVATION

N.T.S.

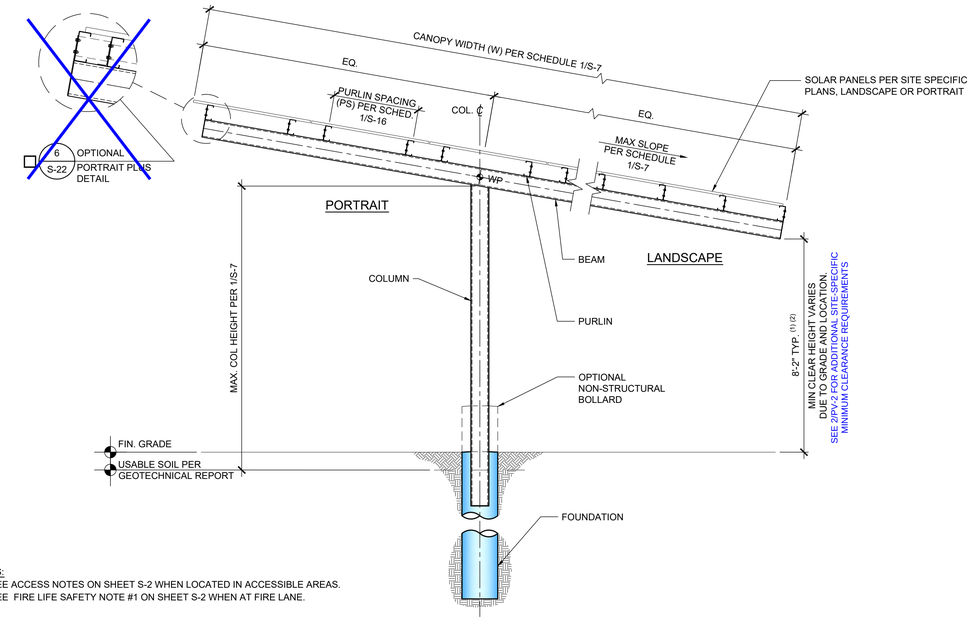

NOTES:
1. SEE ACCESS NOTES ON SHEET S-2 WHEN LOCATED IN ACCESSIBLE AREAS.
2. SEE FIRE LIFE SAFETY NOTE #1 ON SHEET S-2 WHEN AT FIRE LANE.

2 - T-STRUCTURE - END ELEVATION

N.T.S.

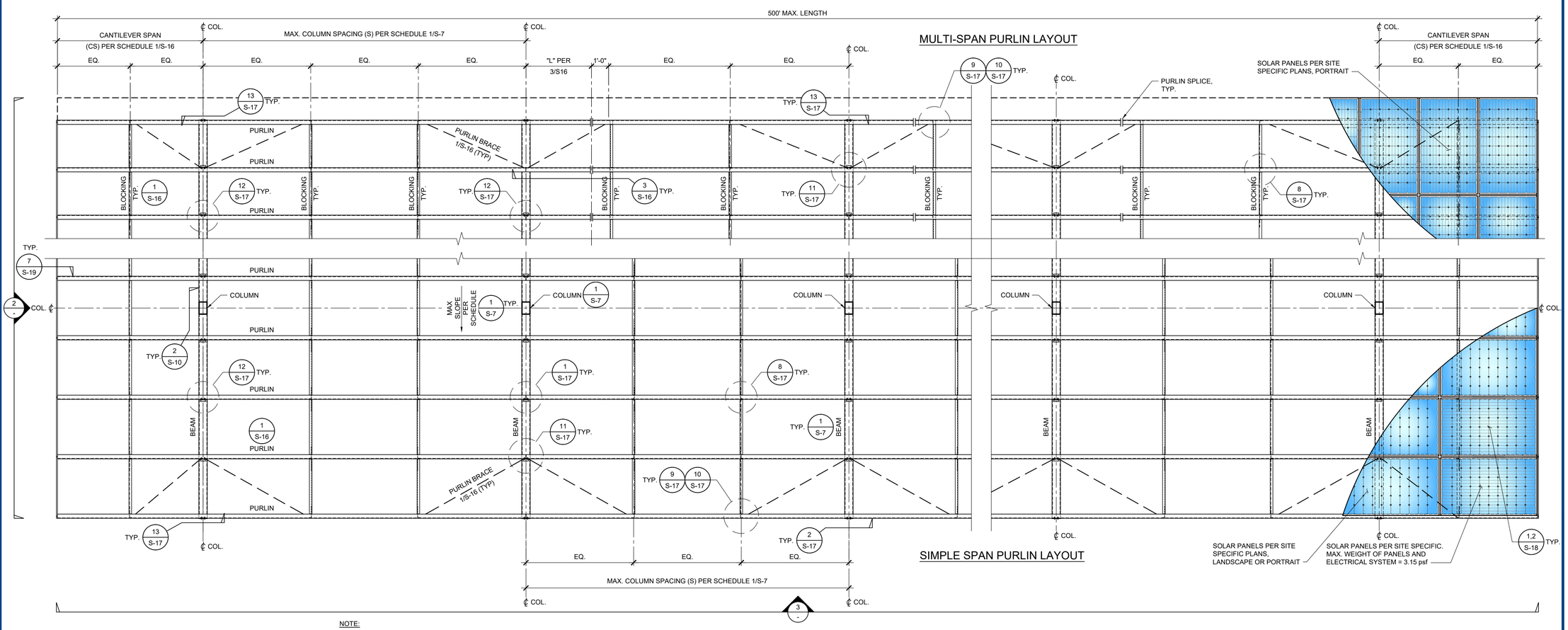

NOTE:
1. BEAM, COLUMN, CONNECTION, AND FOUNDATION SIZES AT ENDS OF STRUCTURE MAY NEED TO BE INCREASED DEPENDING ON PURLIN CANTILEVER. SEE PURLIN SCHEDULE '1/S-16' NOTE 6.
2. ☐ CANTILEVER MID-SPAN BLOCKING/CANTILEVER BRACING REQUIRED, SEE S-16.

1 - T-STRUCTURE - FRAMING PLAN

N.T.S.

IDENTIFICATION STAMP
DIV. OF THE STATE ARCHITECT
APP: 03-125900 INC:
REVIEWED FOR
SS ☑ FLS ☑ ACS ☑
DATE: 03/18/2026

4 STEEL ENGINEERING
26030 ACERO
MISSION VIEJO, CA 92691
949.305.1150 | FAX 949.305.1420

M BAR C CONSTRUCTION INC.
1770 LA COSTA MEADOWS DRIVE
SAN MARCOS, CA 92078
ERIK KRIVOKOPICH
PHONE: (760) 744-4131
FAX: (760) 744-4449
ERIK@MBARCONLINE.COM
LIC # 861960 B AND C51 (770) 787-8845

ENGINEER'S APPROVAL

REGISTERED PROFESSIONAL ENGINEER DUSTIN K. ROSENTHAL S 5885 STATE OF CALIFORNIA

BID INFORMATION

THE STRUCTURES AND DESIGNS IN THIS PC ARE PROPRIETARY TO M BAR C CONSTRUCTION, INC. AND 4 S.T.E.L. ENGINEERING, INC. ALL SITES USING THIS PC: M BAR C CONSTRUCTION, INC. SHALL BE THE STEEL CONTRACTOR & 4 S.T.E.L. ENGINEERING, INC. SHALL BE THE SEOR. SEE THE STANDARD NOTES FOR PC USE ON S-1 FOR ADDITIONAL REQUIREMENTS.

PRE-CHECK (PC) DOCUMENT

CODE: 2022 CBC

A SEPARATE PROJECT APPLICATION FOR CONSTRUCTION IS REQUIRED

APPROVED
DIV. OF THE STATE ARCHITECT
APP: 04-123955 PC
REVIEWED FOR
SS ☑ FLS ☑ ACS ☑ CG ☐
DATE: 10/14/2024

SITE SPECIFIC INFORMATION

ALTADENA ELEMENTARY SCHOOL
743 E CALAVERAS ST.
ALTADENA, CA 91001

REVISIONS

MARK	DATE	DESCRIPTION

4 STEL JOB #	MC02-V3-6
DATE	10-03-24
DRAWN BY	GM
CHECKED	RWS

UG 22.6.1

T-STRUCTURE FRAMING PLAN & ELEVATIONS

S-6

DRAWINGS, SPECIFICATIONS AND OTHER DOCUMENTS, PREPARED BY THE DESIGN PROFESSIONAL (DP) AND THE DP'S CONSULTANTS ARE INSTRUMENTS OF SERVICE FOR USE SOLELY WITH RESPECT TO THIS PROJECT. THIS INCLUDES DOCUMENTS IN ELECTRONIC FORM. THE DP AND THE DP'S CONSULTANTS SHALL BE DEEMED THE AUTHORS AND OWNERS OF THEIR RESPECTIVE INSTRUMENTS OF SERVICE AND SHALL RETAIN ALL COMMON LAW, STATUTORY AND OTHER RESERVED RIGHTS, INCLUDING COPYRIGHTS. THE INSTRUMENTS OF SERVICE SHALL NOT BE USED BY THE OWNER FOR FUTURE ADDITIONS OR ALTERATIONS TO THIS PROJECT OR FOR OTHER PROJECTS, WITHOUT THE PRIOR WRITTEN AGREEMENT OF THE DP. ANY UNAUTHORIZED USE OF THE INSTRUMENTS OF SERVICE SHALL BE AT THE OWNER'S SOLE RISK AND WITHOUT LIABILITY TO THE DP AND THE DP'S CONSULTANTS.

NOTE: IF DWG. IS NOT 24 x 36, IT IS NOT FULL SIZE

T-STRUCTURE BEAM/COLUMN SCHEDULE

USE	I.D. #	MULTI SPAN PURLIN	MAX. WIDTH W	MAX. COLUMN SPACING S	MAX. COLUMN HEIGHT [4]	MAX. ROOF SLOPE	ROOF SNOW LOAD (PSF)	BEAM SECTION	BEAM DETAIL	BEAM TO COLUMN DETAIL	COLUMN SECTION	COLUMN DETAIL
☐	T-601	☐	36'-3"	18'-0"	15'-0"	7°	5	HSS12 x 8 x 1/4	4/S-5	2/S-10	HSS12 x 8 x 3/8	4/S-5
☐	T-602	☐	36'-3"	21'-6"	15'-0"	7°	5	HSS12 x 8 x 1/4	4/S-5	2/S-10	HSS12 x 8 x 1/2	4/S-5
☐	T-603	☐	36'-3"	28'-6"	15'-0"	7°	5	HSS14 x 10 x 5/16	4/S-5	2/S-10	HSS14 x 10 x 1/2	4/S-5
☐	T-604	☐	43'-0"	18'-0"	15'-0"	7°	5	HSS12 x 8 x 3/8	4/S-5	2/S-10	HSS12 x 8 x 1/2	4/S-5
☐	T-605	☐	43'-0"	21'-6"	15'-0"	7°	5	HSS14 x 10 x 5/16	4/S-5	2/S-10	HSS14 x 10 x 3/8	4/S-5
☐	T-606	☐	43'-0"	28'-6"	15'-0"	7°	5	HSS14 x 10 x 5/16	4/S-5	2/S-10	HSS14 x 10 x 1/2	4/S-5
☐	T-607	☑	43'-0"	32'-6"	15'-0"	7°	5	HSS14 x 10 x 5/16	4/S-5	2/S-10	HSS14 x 10 x 1/2	4/S-5
☐	T-608	☑	43'-0"	35'-9"	15'-0"	7°	5	HSS14 x 10 x 3/8	4/S-5	2/S-10	HSS14 x 10 x 5/8	4/S-5
☐	T-609	☐	36'-3"	18'-0"	20'-0"	7°	0	HSS12 x 8 x 1/4	4/S-5	2/S-10	HSS12 x 8 x 1/2	4/S-5
☐	T-610	☐	36'-3"	21'-6"	20'-0"	7°	5	HSS14 x 10 x 1/4	4/S-5	2/S-10	HSS14 x 10 x 1/2	4/S-5
☐	T-611	☐	36'-3"	28'-6"	20'-0"	7°	5	HSS14 x 10 x 5/16	4/S-5	2/S-10	HSS14 x 10 x 1/2	4/S-5
☐	T-612	☐	43'-0"	18'-0"	20'-0"	7°	5	HSS14 x 10 x 5/16	4/S-5	2/S-10	HSS14 x 10 x 1/2	4/S-5
☐	T-613	☐	43'-0"	21'-6"	20'-0"	7°	5	HSS14 x 10 x 5/16	4/S-5	2/S-10	HSS14 x 10 x 1/2	4/S-5
☒	T-614	☐	43'-0"	28'-6"	20'-0"	5°	5	HSS14 x 10 x 5/16	4/S-5	2/S-10	HSS14 x 10 x 5/8	4/S-5
☐	T-651	☐	36'-3"	18'-0"	15'-0"	7°	20	HSS12 x 8 x 5/16	4/S-5	2/S-10	HSS12 x 8 x 1/2	4/S-5
☐	T-652	☐	36'-3"	21'-6"	15'-0"	7°	20	HSS12 x 8 x 5/16	4/S-5	2/S-10	HSS12 x 8 x 1/2	4/S-5
☐	T-653	☐	36'-3"	28'-6"	15'-0"	7°	20	HSS14 x 10 x 5/16	4/S-5	2/S-10	HSS14 x 10 x 1/2	4/S-5
☐	T-654	☐	43'-0"	18'-0"	15'-0"	7°	20	HSS14 x 10 x 5/16	4/S-5	2/S-10	HSS14 x 10 x 3/8	4/S-5
☐	T-655	☐	43'-0"	21'-6"	15'-0"	7°	20	HSS14 x 10 x 5/16	4/S-5	2/S-10	HSS14 x 10 x 1/2	4/S-5
☐	T-656	☐	43'-0"	28'-6"	15'-0"	7°	20	HSS14 x 10 x 1/2	4/S-5	2/S-10	HSS14 x 10 x 1/2	4/S-5
☐	T-657	☑	43'-0"	32'-6"	15'-0"	7°	20	HSS14 x 10 x 1/2	4/S-5	2/S-10	HSS14 x 10 x 5/8	4/S-5
☐	T-658	☐	36'-3"	18'-0"	20'-0"	7°	20	HSS14 x 10 x 5/16	4/S-5	2/S-10	HSS14 x 10 x 1/2	4/S-5
☐	T-659	☐	36'-3"	21'-6"	20'-0"	7°	20	HSS14 x 10 x 5/16	4/S-5	2/S-10	HSS14 x 10 x 1/2	4/S-5
☐	T-660	☐	36'-3"	28'-6"	20'-0"	7°	20	HSS14 x 10 x 5/16	4/S-5	2/S-10	HSS14 x 10 x 1/2	4/S-5
☐	T-661	☐	43'-0"	21'-6"	20'-0"	7°	20	HSS14 x 10 x 5/16	4/S-5	2/S-10	HSS14 x 10 x 1/2	4/S-5

1. MULTIPLE STRUCTURE ID'S MAY BE SELECTED WITHIN THE SAME SITE AND/OR STRUCTURE.

2. WHEN UTILIZING A STRUCTURE ID READ FROM WITHIN THAT ID ROW ONLY.

~~☐ MULTI SPAN PURLIN REQUIRED~~

~~3. 32'-6" AND 35'-9" COLUMN SPACING MUST UTILIZE THE MULTI-SPAN PURLIN AS SHOWN WHEN MULTI SPAN PURLINS CHECKED ABOVE. THE ACTUAL SITE SPECIFIC COLUMN SPACING WILL BE DETERMINED BY THE SOLAR PANEL LAYOUT ON THE SITE. THE COLUMN QUANTITY, COLUMN SPACING, AND PURLIN CANTILEVER LENGTHS ON EACH ARRAY MUST COMPLY WITH THE CORRESPONDING NOTE 9 OR 10 ON 1/S-16.~~

4. MAXIMUM COLUMN HEIGHT IS MEASURED FROM 'USABLE SOIL PER GEOTECHNICAL REPORT' AS SHOWN ON SHEET S-6 AND DETERMINED ON GEOTECH REPORT.

1 / - T-STRUCTURE BEAM/COLUMN SCHEDULE

IDENTIFICATION STAMP
DIV. OF THE STATE ARCHITECT
APP: 03-125900 INC:
REVIEWED FOR
SS ☑ FLS ☑ ACS ☑
DATE: 03/18/2026

4 STEL ENGINEERING
26030 ACERO
MISSION VIEJO, CA 92691
949.305.1150 | FAX 949.305.1420

M BAR C CONSTRUCTION INC.
1770 LA COSTA MEADOWS DRIVE
SAN MARCOS, CA 92078
ERIK KRIVOKOPICH
PHONE: (760) 744-4131
FAX: (760) 744-4449
ERIK@MBARCONLINE.COM
LIC # 869960
B AND C-51
(770) 787-8845

ENGINEER'S APPROVAL

REGISTERED PROFESSIONAL ENGINEER
DUSTIN K. ROSENTHAL
S 5885
STEEL
STATE OF CALIFORNIA

BID INFORMATION

THE STRUCTURES AND DESIGNS IN THIS PC ARE PROPRIETARY TO M BAR C CONSTRUCTION, INC. AND 4 S.T.E.L. ENGINEERING, INC. ALL SITES USING THIS PC: M BAR C CONSTRUCTION, INC. SHALL BE THE STEEL CONTRACTOR & 4 S.T.E.L. ENGINEERING, INC. SHALL BE THE SEOR. SEE THE STANDARD NOTES FOR PC USE ON S-1 FOR ADDITIONAL REQUIREMENTS.

PRE-CHECK (PC) DOCUMENT

CODE: 2022 CBC

A SEPARATE PROJECT APPLICATION FOR CONSTRUCTION IS REQUIRED

~~APPROVED
DIV. OF THE STATE ARCHITECT
APP: 04-123955 PC
REVIEWED FOR
SS ☑ FLS ☑ ACS ☑ CG ☐
DATE: 10/14/2024~~

SITE SPECIFIC INFORMATION

ALTADENA ELEMENTARY SCHOOL
743 E CALAVERAS ST.
ALTADENA, CA 91001

REVISIONS

MARK	DATE	DESCRIPTION

4 STEL JOB #	MC02-V3-6
DATE	10-03-24
DRAWN BY	GM
CHECKED	RWS

UG 22.6.1

T-STRUCTURE BEAM/COLUMN SCHEDULE

S-7

DRAWINGS, SPECIFICATIONS AND OTHER DOCUMENTS, PREPARED BY THE DESIGN PROFESSIONAL (DP) AND THE DP'S CONSULTANTS ARE INSTRUMENTS OF SERVICE FOR USE SOLELY WITH RESPECT TO THIS PROJECT. THIS INCLUDES DOCUMENTS IN ELECTRONIC FORM. THE DP AND THE DP'S CONSULTANTS SHALL BE DEEMED THE AUTHORS AND OWNERS OF THEIR RESPECTIVE INSTRUMENTS OF SERVICE AND SHALL RETAIN ALL COMMON LAW, STATUTORY AND OTHER RESERVED RIGHTS, INCLUDING COPYRIGHTS. THE INSTRUMENTS OF SERVICE SHALL NOT BE USED BY THE OWNER FOR FUTURE ADDITIONS OR ALTERATIONS TO THIS PROJECT OR FOR OTHER PROJECTS, WITHOUT THE PRIOR WRITTEN AGREEMENT OF THE DP. ANY UNAUTHORIZED USE OF THE INSTRUMENTS OF SERVICE SHALL BE AT THE OWNER'S SOLE RISK AND WITHOUT LIABILITY TO THE DP AND THE DP'S CONSULTANTS.

NOTE: IF DWG. IS NOT 24 x 36, IT IS NOT FULL SIZE

T-STRUCTURE PIER FOUNDATION SCHEDULE

USE	I.D. #	MAX. WIDTH W	MAX. COLUMN SPACING S	MAX. COLUMN HEIGHT	MAX. ROOF SLOPE	ROOF SNOW LOAD (PSF)	COLUMN EMBEDMENT CE	FOUNDATION DETAIL	PIER FOUNDATION DIAMETER & DEPTH — SOIL CLASS PER SOILS NOTES SHEET S-3										
									☒ W			☐ X		☐ Y		☐ Z		☒ X, Y, & Z	ALL CLASSES
									DIAMETER	VERTICAL REINFT.	DEPTH	DIAMETER	DEPTH	DIAMETER	DEPTH	DIAMETER	DEPTH	VERTICAL REINFT.	TIE SPACING "TS" AT TOP
☐	T-601	36'-3"	18'-0"	15'-0"	7°	5	56"	2/S-8	2'-0"	(5) - #8	15'-0"	2'-0"	12'-9"	2'-0"	11'-3"	2'-0"	9'-9"	(5) - #8	6"
☐	T-602	36'-3"	21'-6"	15'-0"	7°	5	56"	2/S-8	2'-0"	(6) - #8	15'-9"	2'-0"	13'-3"	2'-0"	12'-0"	2'-0"	10'-3"	(6) - #8	6"
☐	T-603	36'-3"	28'-6"	15'-0"	7°	5	70"	2/S-8	2'-6"	(6) - #8	16'-0"	2'-6"	13'-6"	2'-6"	12'-0"	2'-6"	10'-3"	(6) - #8	6"
☐	T-604	43'-0"	18'-0"	15'-0"	7°	5	56"	2/S-8	2'-0"	(7) - #8	16'-9"	2'-0"	14'-0"	2'-0"	12'-6"	2'-0"	10'-9"	(7) - #8	6"
☐	T-605	43'-0"	21'-6"	15'-0"	7°	5	70"	2/S-8	2'-6"	(6) - #8	15'-9"	2'-6"	13'-3"	2'-6"	12'-0"	2'-6"	10'-3"	(6) - #8	6"
☐	T-606	43'-0"	28'-6"	15'-0"	7°	5	70"	2/S-8	2'-6"	(7) - #8	17'-3"	2'-6"	14'-3"	2'-6"	12'-9"	2'-6"	11'-0"	(7) - #8	6"
☐	T-607	43'-0"	32'-6"	15'-0"	7°	5	70"	2/S-8	3'-0"	(7) - #8	18'-0"	2'-6"	14'-9"	2'-6"	13'-3"	2'-6"	11'-3"	(7) - #8	6"
☐	T-608	43'-0"	35'-9"	15'-0"	7°	5	70"	2/S-8	2'-6"	(8) - #8	19'-0"	2'-6"	15'-6"	2'-6"	13'-9"	2'-6"	11'-9"	(8) - #8	6"
☐	T-609	36'-3"	18'-0"	20'-0"	7°	0	56"	2/S-8	2'-0"	(7) - #8	16'-3"	2'-0"	13'-9"	2'-0"	12'-3"	2'-0"	10'-6"	(7) - #8	6"
☐	T-610	36'-3"	21'-6"	20'-0"	7°	5	70"	2/S-8	2'-6"	(6) - #8	15'-9"	2'-6"	13'-6"	2'-6"	12'-0"	2'-6"	10'-3"	(6) - #8	6"
☐	T-611	36'-3"	28'-6"	20'-0"	7°	5	70"	2/S-8	2'-6"	(8) - #8	17'-6"	2'-6"	14'-6"	2'-6"	13'-0"	2'-6"	11'-0"	(8) - #8	6"
☐	T-612	43'-0"	18'-0"	20'-0"	7°	5	70"	2/S-8	2'-6"	(7) - #8	16'-6"	2'-6"	14'-0"	2'-6"	12'-6"	2'-6"	10'-9"	(7) - #8	6"
☐	T-613	43'-0"	21'-6"	20'-0"	7°	5	70"	2/S-8	2'-6"	(8) - #8	17'-3"	2'-6"	14'-6"	2'-6"	13'-0"	2'-6"	11'-0"	(8) - #8	6"
☒	T-614	43'-0"	28'-6"	20'-0"	5°	5	70"	2/S-8	2'-6"	(10) - #8	19'-0"	2'-6"	15'-6"	2'-6"	13'-9"	2'-6"	11'-9"	(10) - #8	6"
☐	T-651	36'-3"	18'-0"	15'-0"	7°	20	56"	2/S-8	2'-0"	(6) - #8	15'-6"	2'-0"	13'-0"	2'-0"	11'-9"	2'-0"	10'-0"	(6) - #8	6"
☐	T-652	36'-3"	21'-6"	15'-0"	7°	20	56"	2/S-8	2'-6"	(5) - #8	14'-6"	2'-0"	13'-6"	2'-0"	12'-0"	2'-0"	10'-3"	(6) - #8	6"
☐	T-653	36'-3"	28'-6"	15'-0"	7°	20	70"	2/S-8	2'-6"	(6) - #8	18'-0"	2'-6"	13'-6"	2'-6"	12'-3"	2'-6"	10'-6"	(6) - #8	6"
☐	T-654	43'-0"	18'-0"	15'-0"	7°	20	70"	2/S-8	2'-6"	(5) - #8	15'-0"	2'-6"	12'-9"	2'-6"	11'-6"	2'-6"	9'-9"	(5) - #8	6"
☐	T-655	43'-0"	21'-6"	15'-0"	7°	20	70"	2/S-8	2'-6"	(6) - #8	16'-3"	2'-6"	13'-6"	2'-6"	12'-0"	2'-6"	10'-3"	(6) - #8	6"
☐	T-656	43'-0"	28'-6"	15'-0"	7°	20	70"	2/S-8	3'-0"	(7) - #8	18'-0"	2'-6"	15'-0"	2'-6"	15'-0"	2'-6"	12'-9"	(8) - #8	6"
☐	T-657	43'-0"	32'-6"	15'-0"	7°	20	70"	2/S-8	3'-0"	(7) - #8	21'-6"	2'-6"	17'-9"	2'-6"	17'-9"	2'-6"	15'-3"	(9) - #8	6"
☐	T-658	36'-3"	18'-0"	20'-0"	7°	20	70"	2/S-8	2'-6"	(6) - #8	15'-6"	2'-6"	13'-3"	2'-6"	11'-9"	2'-6"	10'-3"	(6) - #8	6"
☐	T-659	36'-3"	21'-6"	20'-0"	7°	20	70"	2/S-8	2'-6"	(6) - #8	16'-3"	2'-6"	13'-9"	2'-6"	12'-3"	2'-6"	10'-6"	(6) - #8	6"
☐	T-660	36'-3"	28'-6"	20'-0"	7°	20	70"	2/S-8	2'-6"	(8) - #8	18'-3"	2'-6"	14'-6"	2'-6"	13'-0"	2'-6"	11'-9"	(8) - #8	6"
☐	T-661	43'-0"	21'-6"	20'-0"	7°	20	70"	2/S-8	2'-6"	(8) - #8	17'-3"	2'-6"	14'-6"	2'-6"	13'-0"	2'-6"	11'-0"	(8) - #8	6"

1. MULTIPLE STRUCTURE ID'S MAY BE SELECTED WITHIN THE SAME SITE AND/OR STRUCTURE.
2. WHEN UTILIZING A STRUCTURE ID READ FROM WITHIN THAT ID ROW ONLY.
3. SEE SOILS NOTES ON SHEET S-3 FOR INFORMATION ON SOILS CLASS SELECTION.
4. WHERE WATER MITIGATION IS NECESSARY, OR FOR OTHER CONDITIONS REQUIRING MITIGATION, REFER TO DETAIL 2/- FOR SLEEVED FOUNDATION OPTION.
5. FOR CONDUIT INTERACTION WITH FOUNDATION SEE S-21.

1 / - T-STRUCTURE NON-CONSTRAINED PIER FOUNDATION SCHEDULE

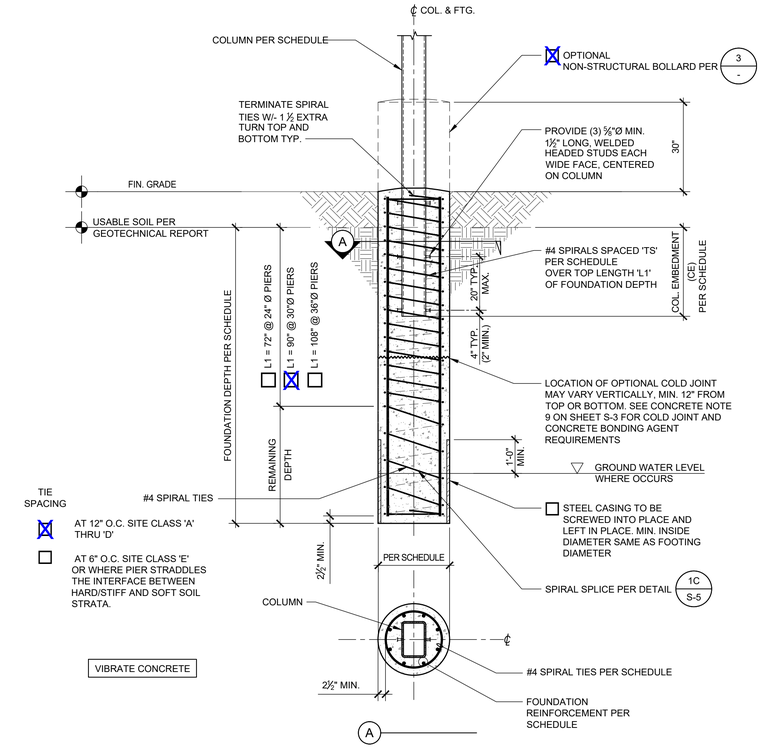

2 / - PIER FOUNDATION DETAIL

1/2" = 1'-0"

NOTES:

1. CONCRETE BOLLARDS TO BE POURED IN A SECOND POUR AFTER THE FOUNDATION BELOW GRADE IS POURED. DSA INSPECTOR TO PERIODICALLY INSPECT THE INSTALLATION OF BONDING AGENT WHEN USED.
2. BOLLARD REBAR CAGE SHALL BE CONSTRUCTED INDEPENDENTLY FROM THE FOUNDATION USING 4 - #3 VERTICAL BARS.

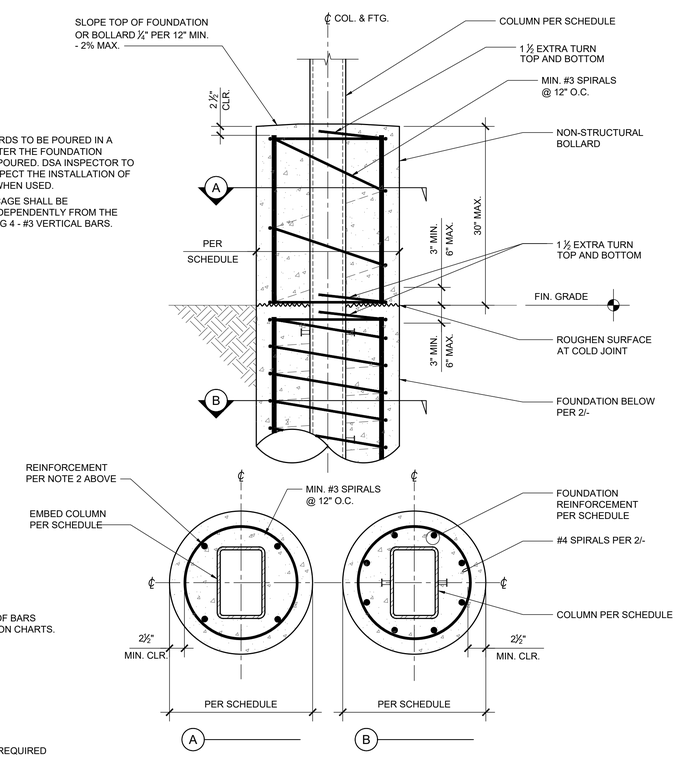

NOTE:

NUMBER AND SIZES OF BARS VARY SEE FOUNDATION CHARTS.

☒ BOLLARD REQUIRED

3 / - OPTIONAL NON-STRUCTURAL BOLLARD

1" = 1'-0"

IDENTIFICATION STAMP
DIV. OF THE STATE ARCHITECT
APP: 03-125900 INC:
REVIEWED FOR
SS ☑ FLS ☑ ACS ☑
DATE: 03/18/2026

4 STEEL ENGINEERING
26030 ACERO
MISSION VIEJO, CA 92691
949.305.1150 | FAX 949.305.1420

M BAR C CONSTRUCTION INC.
1770 LA COSTA MEADOWS DRIVE
SAN MARCOS, CA 92078
ERIK KRIVOKOPICH
PHONE: (760) 744-4131
FAX: (760) 744-4449
ERIK@MBARCONLINE.COM
LIC # 861960 B AND C51
(770) 787-8845

ENGINEER'S APPROVAL

REGISTERED PROFESSIONAL ENGINEER
DUSTIN K. ROSENTHAL
S 5885
Exp. 12-31-25
STATE OF CALIFORNIA

BID INFORMATION

THE STRUCTURES AND DESIGNS IN THIS PC ARE PROPRIETARY TO M BAR C CONSTRUCTION, INC. AND 4 S.T.E.L. ENGINEERING, INC. ALL SITES USING THIS PC: M BAR C CONSTRUCTION, INC. SHALL BE THE STEEL CONTRACTOR & 4 S.T.E.L. ENGINEERING, INC. SHALL BE THE SEOR. SEE THE STANDARD NOTES FOR PC USE ON S-1 FOR ADDITIONAL REQUIREMENTS.

PRE-CHECK (PC) DOCUMENT

CODE: 2022 CBC

A SEPARATE PROJECT APPLICATION FOR CONSTRUCTION IS REQUIRED

APPROVED
DIV. OF THE STATE ARCHITECT
APP: 04-123955 PC
REVIEWED FOR
SS ☑ FLS ☑ ACS ☑ CG ☐
DATE: 10/14/2024

SITE SPECIFIC INFORMATION

ALTADENA ELEMENTARY SCHOOL
743 E CALAVERAS ST.
ALTADENA, CA 91001

REVISIONS

MARK	DATE	DESCRIPTION

4 STEL JOB #	MC02-V3-6
DATE	10-03-24
DRAWN BY	GM
CHECKED	RWS

UG 22.6.1

T-STRUCTURE PIER FOUNDATION SCHEDULE

S-8

DRAWINGS, SPECIFICATIONS AND OTHER DOCUMENTS, PREPARED BY THE DESIGN PROFESSIONAL (DP) AND THE DP'S CONSULTANTS ARE INSTRUMENTS OF SERVICE FOR USE SOLELY WITH RESPECT TO THIS PROJECT. THIS INCLUDES DOCUMENTS IN ELECTRONIC FORM. THE DP AND THE DP'S CONSULTANTS SHALL BE DEEMED THE AUTHORS AND OWNERS OF THEIR RESPECTIVE INSTRUMENTS OF SERVICE AND SHALL RETAIN ALL COMMON LAW, STATUTORY AND OTHER RESERVED RIGHTS, INCLUDING COPYRIGHTS. THE INSTRUMENTS OF SERVICE SHALL NOT BE USED BY THE OWNER FOR FUTURE ADDITIONS OR ALTERATIONS TO THIS PROJECT OR FOR OTHER PROJECTS, WITHOUT THE PRIOR WRITTEN AGREEMENT OF THE DP. ANY UNAUTHORIZED USE OF THE INSTRUMENTS OF SERVICE SHALL BE AT THE OWNER'S SOLE RISK AND WITHOUT LIABILITY TO THE DP AND THE DP'S CONSULTANTS.

NOTE: IF DWG. IS NOT 24 x 36, IT IS NOT FULL SIZE

T-STRUCTURE BEAM-TO-COLUMN SCHEDULE

USE	I.D. #	MAX. WIDTH W	MAX. COLUMN SPACING S	MAX. COLUMN HEIGHT	MAX. ROOF SLOPE	ROOF SNOW LOAD (PSF)	BEAM TO COLUMN DETAIL	BEAM TO COLUMN SIDE PLATE 't' x 'B' x 'L' (IN)	SIDE PLATE WELDS MIN. THICKNESS t	MIN. HORIZONTAL LENGTH L_h	MIN. VERTICAL LENGTH L_v
☐	T-601	36'-3"	18'-0"	15'-0"	7°	5	2/S-10	1/2 x 9 1/4 x 1'-9 7/8"	3/16"	9"	9.5"
☐	T-602	36'-3"	21'-6"	15'-0"	7°	5	2/S-10	5/8 x 8 3/4 x 1'-9 7/8"	3/16"	8.5"	9.5"
☐	T-603	36'-3"	28'-6"	15'-0"	7°	5	2/S-10	5/8 x 10 x 2'-1"	1/4"	10"	10.5"
☐	T-604	43'-0"	18'-0"	15'-0"	7°	5	2/S-10	3/4 x 8 3/4 x 1'-9 3/8"	1/4"	8.5"	9"
☐	T-605	43'-0"	21'-6"	15'-0"	7°	5	2/S-10	5/8 x 10 3/4 x 2'-0 7/8"	1/4"	10.5"	10.5"
☐	T-606	43'-0"	28'-6"	15'-0"	7°	5	2/S-10	7/8 x 10 x 2'-1"	5/16"	10"	10.5"
☐	T-607	43'-0"	32'-6"	15'-0"	7°	5	2/S-10	1 x 10 x 2'-1"	5/16"	10"	10.5"
☐	T-608	43'-0"	35'-9"	15'-0"	7°	5	2/S-10	1 1/2 x 9 1/4 x 2'-0 3/4"	3/8"	9"	10.5"
☐	T-609	36'-3"	18'-0"	20'-0"	7°	0	2/S-10	5/8 x 8 3/4 x 1'-9 7/8"	3/16"	8.5"	9.5"
☐	T-610	36'-3"	21'-6"	20'-0"	7°	5	2/S-10	5/8 x 10 x 2'-1 3/8"	3/16"	10"	11"
☐	T-611	36'-3"	28'-6"	20'-0"	7°	5	2/S-10	3/4 x 10 x 2'-1"	1/4"	10"	10.5"
☐	T-612	43'-0"	18'-0"	20'-0"	7°	5	2/S-10	5/8 x 10 x 2'-1"	3/16"	10"	10.5"
☐	T-613	43'-0"	21'-6"	20'-0"	7°	5	2/S-10	3/4 x 10 x 2'-1"	1/4"	10"	10.5"
☒	T-614	43'-0"	28'-6"	20'-0"	5°	5	2/S-10	1 1/4 x 9 1/4 x 2'-1 1/8"	5/16"	9"	11"
☐	T-651	36'-3"	18'-0"	15'-0"	7°	20	2/S-10	5/8 x 8 3/4 x 1'-9 5/8"	3/16"	8.5"	9.5"
☐	T-652	36'-3"	21'-6"	15'-0"	7°	20	2/S-10	3/4 x 8 3/4 x 1'-9 5/8"	1/4"	8.5"	9.5"
☐	T-653	36'-3"	28'-6"	15'-0"	7°	20	2/S-10	3/4 x 10 x 2'-1"	1/4"	10"	10.5"
☐	T-654	43'-0"	18'-0"	15'-0"	7°	20	2/S-10	5/8 x 10 3/4 x 2'-0 7/8"	3/16"	10.5"	10.5"
☐	T-655	43'-0"	21'-6"	15'-0"	7°	20	2/S-10	7/8 x 10 x 2'-1"	1/4"	10"	10.5"
☐	T-656	43'-0"	28'-6"	15'-0"	7°	20	2/S-10	1 1/4 x 10 x 1'-11 7/8"	3/8"	10"	9.5"
☐	T-657	43'-0"	32'-6"	15'-0"	7°	20	2/S-10	1 1/2 x 9 1/4 x 2'-0"	1/2"	9"	9.5"
☐	T-658	36'-3"	18'-0"	20'-0"	7°	20	2/S-10	5/8 x 10 x 2'-1"	3/16"	10"	10.5"
☐	T-659	36'-3"	21'-6"	20'-0"	7°	20	2/S-10	5/8 x 10 x 2'-1"	3/16"	10"	10.5"
☐	T-660	36'-3"	28'-6"	20'-0"	7°	20	2/S-10	7/8 x 10 x 2'-1"	1/4"	10"	10.5"
☐	T-661	43'-0"	21'-6"	20'-0"	7°	20	2/S-10	7/8 x 10 x 2'-1"	1/4"	10"	10.5"

1. MULTIPLE STRUCTURE ID'S MAY BE SELECTED WITHIN THE SAME SITE AND/OR STRUCTURE.
2. WHEN UTILIZING A STRUCTURE ID READ FROM WITHIN THAT ID ROW ONLY.

1 - T-STRUCTURE BEAM-TO-COLUMN SCHEDULE

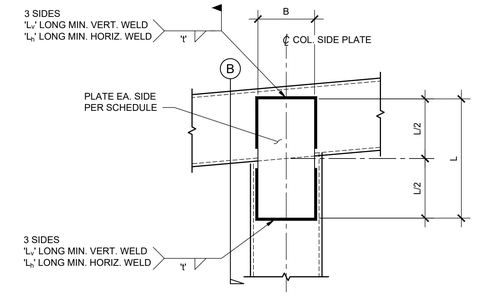

A ELEVATION

NOTES:

1. WELD TO BE ALL AROUND PLATE. PORTIONS OF THE WELD ALL AROUND JOINT ARE STRUCTURAL AND OTHER PORTIONS ARE NON STRUCTURAL. MINIMUM STRUCTURAL WELD LENGTHS 'L_v' AND 'L_h' PER SCHEDULE. WELDS BEYOND THESE MIN. LENGTHS ARE NON STRUCTURAL SEAL WELDS.
2. PURLIN, SOLAR PANEL NOT SHOWN

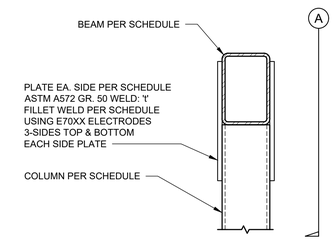

B SECTION

2 - BEAM TO COLUMN
1" = 1'-0"

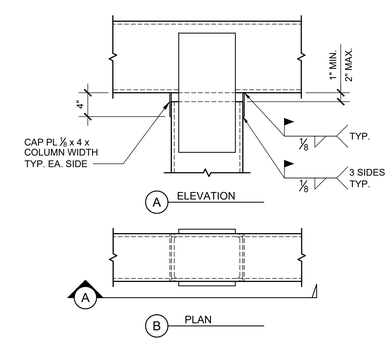

A ELEVATION

B PLAN

3 - BEAM TO COLUMN CORROSION PROTECTION OPTION 1
1" = 1'-0"

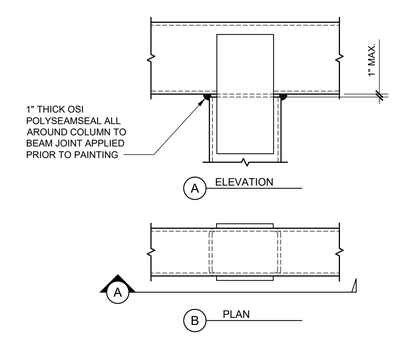

A ELEVATION

B PLAN

4 - BEAM TO COLUMN CORROSION PROTECTION OPTION 2
1" = 1'-0"

IDENTIFICATION STAMP
DIV. OF THE STATE ARCHITECT
APP: 03-125900 INC:
REVIEWED FOR
SS ☑ FLS ☑ ACS ☑
DATE: 03/18/2026

4 STEL ENGINEERING
26030 ACERO
MISSION VIEJO, CA 92691
949.305.1150 | FAX 949.305.1420

M BAR C CONSTRUCTION INC.
1770 LA COSTA MEADOWS DRIVE
SAN MARCOS, CA 92078
ERIK KRIVOKOPICH
PHONE: (760) 744-4131
FAX: (760) 744-4449
ERIK@MBARCONLINE.COM
LIC # 869960 B AND C51
(760) 707-8845

ENGINEER'S APPROVAL

REGISTERED PROFESSIONAL ENGINEER
DUSTIN K. ROSENTHAL
S 5885
Exp. 12-31-26
STATE OF CALIFORNIA

BID INFORMATION

THE STRUCTURES AND DESIGNS IN THIS PC ARE PROPRIETARY TO M BAR C CONSTRUCTION, INC. AND 4 S.T.E.L. ENGINEERING, INC. ALL SITES USING THIS PC: M BAR C CONSTRUCTION, INC. SHALL BE THE STEEL CONTRACTOR & 4 S.T.E.L. ENGINEERING, INC. SHALL BE THE SEOR. SEE THE STANDARD NOTES FOR PC USE ON S-1 FOR ADDITIONAL REQUIREMENTS.

PRE-CHECK (PC) DOCUMENT

CODE: 2022 CBC

A SEPARATE PROJECT APPLICATION FOR CONSTRUCTION IS REQUIRED

APPROVED
DIV. OF THE STATE ARCHITECT
APP: 04-123955 PC
REVIEWED FOR
SS ☑ FLS ☑ ACS ☑ CG ☐
DATE: 10/14/2024

SITE SPECIFIC INFORMATION

ALTADENA ELEMENTARY SCHOOL
743 E CALAVERAS ST.
ALTADENA, CA 91001

REVISIONS

MARK	DATE	DESCRIPTION

4 STEL JOB #	MC02-V3-6
DATE	10-03-24
DRAWN BY	GM
CHECKED	RWS

UG 22.6.1

T-STRUCTURE BEAM-TO-COLUMN SCHEDULE

S-10

DRAWINGS, SPECIFICATIONS AND OTHER DOCUMENTS, PREPARED BY THE DESIGN PROFESSIONAL (DP) AND THE DP'S CONSULTANTS ARE INSTRUMENTS OF SERVICE FOR USE SOLELY WITH RESPECT TO THIS PROJECT. THIS INCLUDES DOCUMENTS IN ELECTRONIC FORM. THE DP AND THE DP'S CONSULTANTS SHALL BE DEEMED THE AUTHORS AND OWNERS OF THEIR RESPECTIVE INSTRUMENTS OF SERVICE AND SHALL RETAIN ALL COMMON LAW, STATUTORY AND OTHER RESERVED RIGHTS, INCLUDING COPYRIGHTS. THE INSTRUMENTS OF SERVICE SHALL NOT BE USED BY THE OWNER FOR FUTURE ADDITIONS OR ALTERATIONS TO THIS PROJECT OR FOR OTHER PROJECTS, WITHOUT THE PRIOR WRITTEN AGREEMENT OF THE DP. ANY UNAUTHORIZED USE OF THE INSTRUMENTS OF SERVICE SHALL BE AT THE OWNER'S SOLE RISK AND WITHOUT LIABILITY TO THE DP AND THE DP'S CONSULTANTS.

NOTE: IF DWG. IS NOT 24 x 36, IT IS NOT FULL SIZE

PURLIN SCHEDULE

USE	I.D. #	MULTI SPAN PURLIN	PURLIN[8] SPACING (PS)	MAX. COLUMN SPACING (S)	ROOF SNOW LOAD (PSF)	MAX. CANTILEVER SPAN[6] (CS) MIDSPAN BLOCKING	MAX. CANTILEVER SPAN (CS) NO BLOCKING	PURLIN SECTION	PURLIN DETAIL	BLOCKING SECTION	BLOCKING DETAIL	ALTERNATE PURLIN SECTION	ALTERNATE PURLIN DETAIL	ALTERNATE BLOCKING SECTION	ALTERNATE BLOCKING DETAIL	BLOCKING TO PURLIN DETAILS BOLT DIA. d_3 (IN)	BLOCKING TO PURLIN DETAILS INTERIOR	BLOCKING TO PURLIN DETAILS EXTERIOR	PURLIN TO BEAM DETAILS INTERIOR PURLINS SPLICE	PURLIN TO BEAM DETAILS INTERIOR PURLINS CONTINUOUS	PURLIN TO BEAM DETAILS EXTERIOR PURLINS SPLICE	PURLIN TO BEAM DETAILS EXTERIOR PURLINS CONTINUOUS	INTERIOR CLIP ANGLE THICKNESS t_1 (IN)	INTERIOR CLIP ANGLE BOLT DIA. d_1 (IN)	EXTERIOR END PLATE THICKNESS t_2 (IN)	EXTERIOR END PLATE BOLT DIA. d_2 (IN)	PURLIN BRACING DETAILS
☐	P601	☐	47"	18'-0"	0	10'-0"	6'-0"	CS12 x 4 x 0.071 (14GA)	2/S-5	CS9 x 2.5 x 0.057 (16 GA)	3/S-5	CS8 x 4 x 0.071 (14GA)	2/S-5	CS5 x 2.5 x 0.057 (16 GA)	3/S-5	1/2	8/S-17	9/S-17	1/S-17	12/S-17	2/S-17	13/S-17	1/2	1/2	3/8	1/2	N/A
☐	P602	☐	47"	18'-0"	5	10'-0"	6'-0"	CS12 x 4 x 0.071 (14GA)	2/S-5	CS9 x 2.5 x 0.057 (16 GA)	3/S-5	CS8 x 4 x 0.071 (14GA)	2/S-5	CS5 x 2.5 x 0.057 (16 GA)	3/S-5	1/2	8/S-17	9/S-17	1/S-17	12/S-17	2/S-17	13/S-17	1/2	1/2	3/8	1/2	N/A
☐	P603	☐	47"	18'-0"	20	10'-0"	5'-6"	CS12 x 4 x 0.071 (14GA)	2/S-5	CS9 x 2.5 x 0.057 (16 GA)	3/S-5	CS10 x 4 x 0.071 (14GA)	2/S-5	CS7 x 2.5 x 0.057 (16 GA)	3/S-5	1/2	8/S-17	9/S-17	1/S-17	12/S-17	2/S-17	13/S-17	1/2	1/2	3/8	1/2	N/A
☐	P604	☐	47"	21'-6"	0	11'-0"	8'-0"	CS12 x 4 x 0.102 (12GA)	2/S-5	CS9 x 2.5 x 0.057 (16 GA)	3/S-5	CS10 x 4 x 0.102 (12GA)	2/S-5	CS7 x 2.5 x 0.057 (16 GA)	3/S-5	1/2	8/S-17	9/S-17	1/S-17	12/S-17	2/S-17	13/S-17	1/2	1/2	1/2	1/2	N/A
☐	P605	☐	47"	21'-6"	5	11'-0"	8'-0"	CS12 x 4 x 0.102 (12GA)	2/S-5	CS9 x 2.5 x 0.057 (16 GA)	3/S-5	CS10 x 4 x 0.102 (12GA)	2/S-5	CS7 x 2.5 x 0.057 (16 GA)	3/S-5	1/2	8/S-17	9/S-17	1/S-17	12/S-17	2/S-17	13/S-17	1/2	1/2	1/2	1/2	N/A
☐	P606	☐	47"	21'-6"	20	11'-0"	7'-0"	CS12 x 4 x 0.102 (12GA)	2/S-5	CS9 x 2.5 x 0.057 (16 GA)	3/S-5	CS10 x 4 x 0.102 (12GA)	2/S-5	CS7 x 2.5 x 0.057 (16 GA)	3/S-5	1/2	8/S-17	9/S-17	1/S-17	12/S-17	2/S-17	13/S-17	1/2	1/2	1/2	1/2	N/A
☐	P607	☐	47"	28'-6"	0	13'-0"	8'-0"	CS12 x 4 x 0.071 (14GA)	2/S-5	CS9 x 2.5 x 0.057 (16 GA)	3/S-5	CS14 x 3.5 x 0.071 (14GA)	2/S-5	CS11 x 2.5 x 0.057 (16 GA)	3/S-5	1/2	8/S-17	9/S-17	1/S-17	12/S-17	2/S-17	13/S-17	1/2	1/2	3/8	1/2	10, 11/S-17
☒	P608	☐	47"	28'-6"	5	~~13'-0"~~ 11'-9"	8'-0"	CS12 x 4 x 0.071 (14GA)	2/S-5	CS9 x 2.5 x 0.057 (16 GA)	3/S-5	~~CS14 x 3.5 x 0.071 (14GA)~~	~~2/S-5~~	~~CS11 x 2.5 x 0.057 (16 GA)~~	~~3/S-5~~	1/2	8/S-17	9/S-17	1/S-17	12/S-17	2/S-17	13/S-17	1/2	1/2	3/8	1/2	10, 11/S-17
☐	P609	☐	47"	28'-6"	20	13'-0"	7'-6"	CS12 x 4 x 0.102 (12GA)	2/S-5	CS9 x 2.5 x 0.057 (16 GA)	3/S-5	CS12 x 3.5 x 0.102 (12GA)	2/S-5	CS9 x 2.5 x 0.057 (16 GA)	3/S-5	1/2	8/S-17	9/S-17	1/S-17	12/S-17	2/S-17	13/S-17	1/2	1/2	3/8	1/2	10, 11/S-17
☐	P610[9]	☑	47"	32'-6"	0	12'-8"	n/a	CS12 x 4 x 0.071 (14GA)	2/S-5	CS9 x 2.5 x 0.057 (16 GA)	3/S-5	CS10 x 4 x 0.071 (14GA)	2/S-5	CS7 x 2.5 x 0.057 (16 GA)	3/S-5	1/2	8/S-17	9/S-17	3/S-16	12/S-17	3/S-16	13/S-17	1/2	1/2	1/2	1/2	10, 11/S-17
☐	P611[9]	☑	47"	32'-6"	5	12'-8"	n/a	CS12 x 4 x 0.071 (14GA)	2/S-5	CS9 x 2.5 x 0.057 (16 GA)	3/S-5	CS10 x 4 x 0.071 (14GA)	2/S-5	CS7 x 2.5 x 0.057 (16 GA)	3/S-5	1/2	8/S-17	9/S-17	3/S-16	12/S-17	3/S-16	13/S-17	1/2	1/2	1/2	1/2	10, 11/S-17
☐	P612[9]	☑	47"	32'-6"	20	12'-8"	n/a	CS12 x 4 x 0.102 (12GA)	2/S-5	CS9 x 2.5 x 0.057 (16 GA)	3/S-5	CS10 x 3.5 x 0.102 (12GA)	2/S-5	CS7 x 2.5 x 0.057 (16 GA)	3/S-5	1/2	8/S-17	9/S-17	3/S-16	12/S-17	3/S-16	13/S-17	1/2	1/2	1/2	1/2	10, 11/S-17
☐	P613[10]	☑	47"	35'-9"	0	12'-6"	n/a	CS12 x 4 x 0.071 (14GA)	2/S-5	CS9 x 2.5 x 0.057 (16 GA)	3/S-5	CS12 x 4 x 0.071 (14GA)	2/S-5	CS9 x 2.5 x 0.057 (16 GA)	3/S-5	1/2	8/S-17	9/S-17	3/S-16	12/S-17	3/S-16	13/S-17	1/2	1/2	1/2	1/2	10, 11/S-17
☐	P614[10]	☑	47"	35'-9"	5	12'-6"	n/a	CS12 x 4 x 0.071 (14GA)	2/S-5	CS9 x 2.5 x 0.057 (16 GA)	3/S-5	CS12 x 4 x 0.071 (14GA)	2/S-5	CS9 x 2.5 x 0.057 (16 GA)	3/S-5	1/2	8/S-17	9/S-17	3/S-16	12/S-17	3/S-16	13/S-17	1/2	1/2	1/2	1/2	10, 11/S-17
☐	P615[10]	☑	47"	35'-9"	20	12'-6"	n/a	CS12 x 4 x 0.102 (12GA)	2/S-5	CS9 x 2.5 x 0.057 (16 GA)	3/S-5	CS12 x 4 x 0.102 (12GA)	2/S-5	CS9 x 2.5 x 0.057 (16 GA)	3/S-5	1/2	8/S-17	9/S-17	3/S-16	12/S-17	3/S-16	13/S-17	1/2	1/2	1/2	1/2	10, 11/S-17

NOTES:

1. MULTIPLE STRUCTURE ID'S MAY BE SELECTED WITHIN THE SAME SITE AND/OR STRUCTURE.
2. WHEN UTILIZING A STRUCTURE ID READ FROM WITHIN THAT ID ROW ONLY.
3. BEAM TO PURLIN DETAIL AT SPLICE SHALL NOT OCCUR ON A PURLIN WITH A CANTILEVER SPAN.
4. WHEN THE CANTILEVER SPAN SHOWN ON THE SITE SPECIFIC SHEETS DOES NOT EXCEED THE MAX CANTILEVER SPAN NO BLOCKING, MID SPAN BLOCKING OF THE CANTILEVER IS NOT REQUIRED.
5. PURLIN SPACING MAY BE INCREASED BEYOND THE MAXIMUMS GIVEN IN THE SCHEDULE ABOVE AS LONG AS THE TRIBUTARY WIDTH TO THE PURLIN DOES NOT EXCEED PS.
6. LONG PURLIN CANTILEVERS INCREASE THE TRIBUTARY AREA TO THE END BEAM AND MAY REQUIRE THE SUPPORTING MEMBERS TO INCREASE IN SIZE PER THE PURLIN CANTILEVER SCHEDULE ADJACENT. THE LEFT COLUMN OF THE SCHEDULE REPRESENTS THE COLUMN SPACING CURRENTLY USED, AND THE CENTER COLUMN OF THE SCHEDULE REPRESENTS THE PURLIN CANTILEVER RANGE. USING THE COLUMN SPACING AND PURLIN CANTILEVER ADJACENT TO THE END BEAM, DETERMINE THE APPROPRIATE MEMBER SIZING PER THE RIGHTMOST COLUMN OF THE SCHEDULE. FOR EXAMPLES, SEE DETAIL 2/-.
7. MINIMUM PURLIN SPACING WHERE PURLIN BRACING OCCURS IS 38.5". NO MINIMUM SPACING IS REQUIRED OTHER LOCATIONS.
8. WHEN PURLIN CANTILEVER DOES NOT REQUIRE BLOCKING PURLIN BRACING ON THE CANTILEVER IS NOT REQUIRED.
9. ☐ ALL STRUCTURES UTILIZING THIS PURLIN OPTION SHALL BE GOVERNED BY THE SOLAR PANEL DIMENSIONS AND NO OTHER SITE CONDITIONS. STRUCTURES MUST HAVE A MINIMUM OF 3 COLUMNS. STRUCTURES CANNOT HAVE PANELS WIDER THAN 42". LAYOUTS REQUIRE THAT THE CANTILEVER PURLIN LENGTH BE EXACTLY 3.5x(PANEL WIDTH PLUS PANEL GAP), THE COLUMN SPACING MUST BE EXACTLY 9x(PANEL WIDTH PLUS PANEL GAP), AND PURLIN SPLICE LOCATION "L" IN DETAIL 3/S-16 EXACTLY 1.5x(PANEL WIDTH PLUS PANEL GAP). THE PURLIN MAX. CANTILEVER LENGTH, COLUMN SPACING, AND SPLICE LOCATION "L" MUST ALL BE RATIOS OF THE PANEL WIDTH, AND CANNOT DEVIATE FROM THE SPACING PREVIOUSLY STATED.
10. ☐ ALL STRUCTURES UTILIZING THIS PURLIN OPTION SHALL BE GOVERNED BY THE SOLAR PANEL DIMENSIONS AND NO OTHER SITE CONDITIONS. STRUCTURES MUST HAVE A MINIMUM OF 3 COLUMNS. STRUCTURES CANNOT HAVE PANELS WIDER THAN 42". LAYOUTS REQUIRE THAT THE CANTILEVER PURLIN LENGTH BE EXACTLY 3.5x(PANEL WIDTH PLUS PANEL GAP), THE COLUMN SPACING MUST BE EXACTLY 10x(PANEL WIDTH PLUS PANEL GAP), AND PURLIN SPLICE LOCATION "L" IN DETAIL 3/S-16 EXACTLY 1.5x(PANEL WIDTH PLUS PANEL GAP). THE PURLIN MAX. CANTILEVER LENGTH, COLUMN SPACING, AND SPLICE LOCATION "L" MUST ALL BE RATIOS OF THE PANEL WIDTH, AND CANNOT DEVIATE FROM THE SPACING PREVIOUSLY STATED.

PURLIN CANTILEVER SCHEDULE

USE	COLUMN SPACING	MAX. CANTILEVER	REQUIRED MEMBER PC I.D. # PER S-7, S-12
☐	18'-0"	CS ≤ 7'-3"	18'-0"
☐	18'-0"	7'-3" < CS ≤ 8'-9"	21'-6"
☐	18'-0"	8'-9" < CS ≤ 10'-6"	28'-6"
☐	21'-6"	CS ≤ 8'-9"	21'-6"
☐	21'-6"	8'-9" < CS ≤ 11'-6"	28'-6"
☒	28'-6"	CS ≤ 11-9"	28'-6"
☐	~~28'-6"~~	~~11'-9" < CS ≤ 13'-0"~~	~~32'-6"~~

1 / - PURLIN SCHEDULE

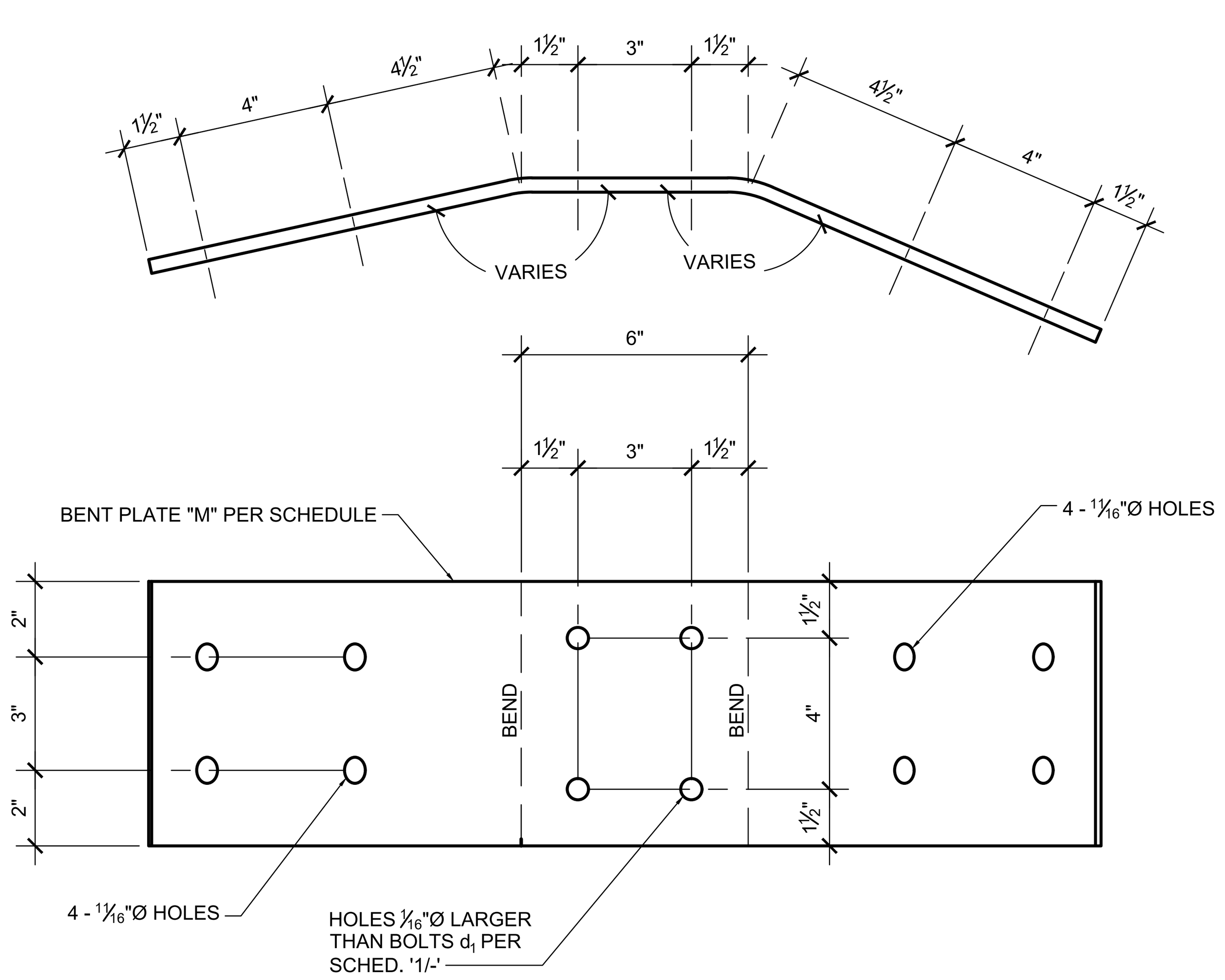

PURLIN BRACE PLATE

USE	MAX. COLUMN SPACING "S" FROM 1/-	MATERIAL "M"
☒	"S" <= 28'-6"	12 GA 55 KSI
☐	~~"S" = 32'-6"~~	~~10 GA 55 KSI~~
☐	~~"S" = 35'-9"~~	~~10 GA 55 KSI~~

4 / - PURLIN BRACE PLATE 3"=1'-0"

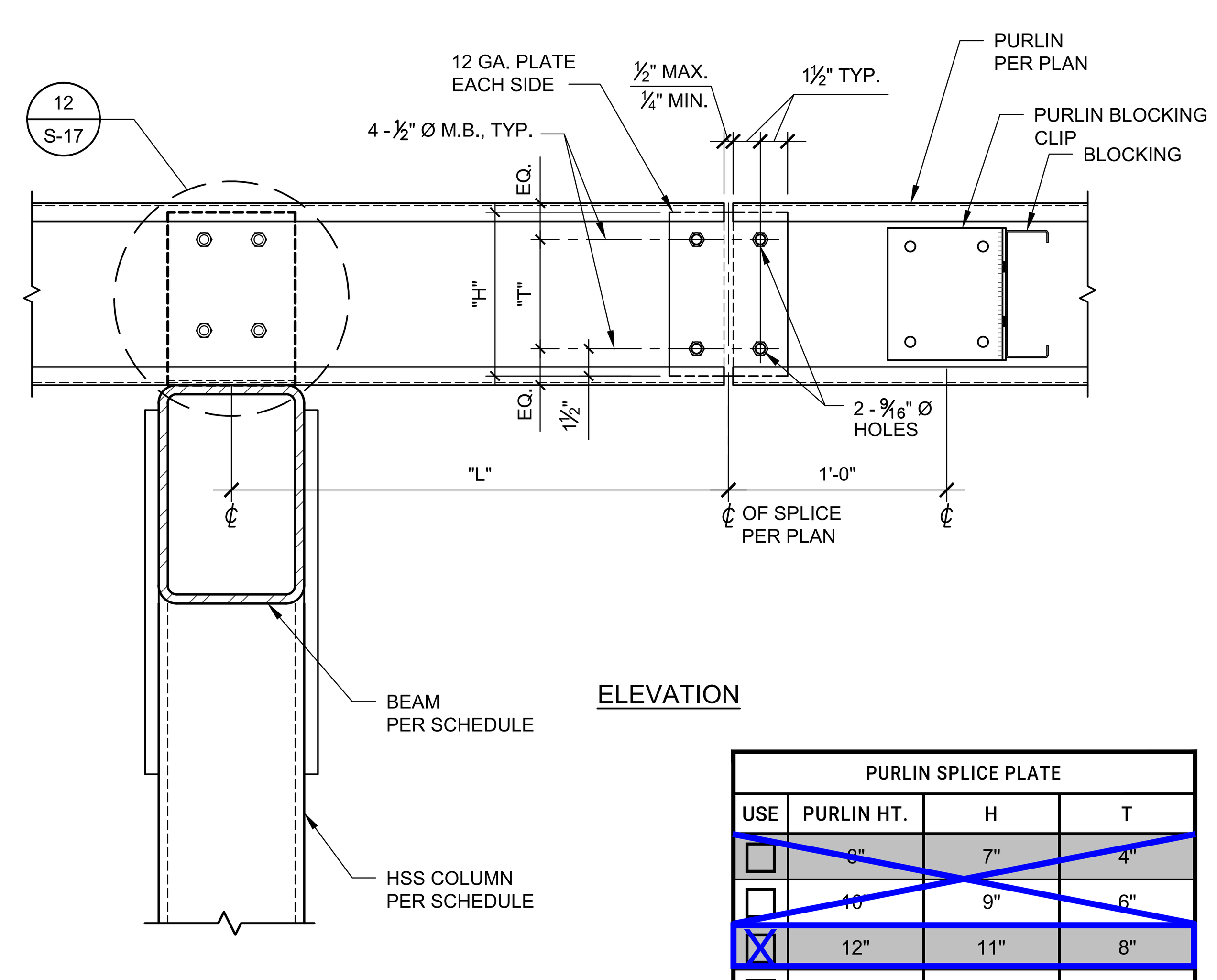

PURLIN SPLICE PLATE

USE	PURLIN HT.	H	T
☐	8"	7"	4"
☐	10"	9"	6"
☒	12"	11"	8"
☐	~~14"~~	~~13"~~	~~10"~~

NOTE:
L = 1.5 x (PANEL WIDTH + PANEL GAP)
(SEE NOTES 9 AND 10 ON 1/- FOR MULTI-SPAN PURLIN REQUIREMENTS)

3 / - PURLIN SPLICE 1-1/2"=1'-0"

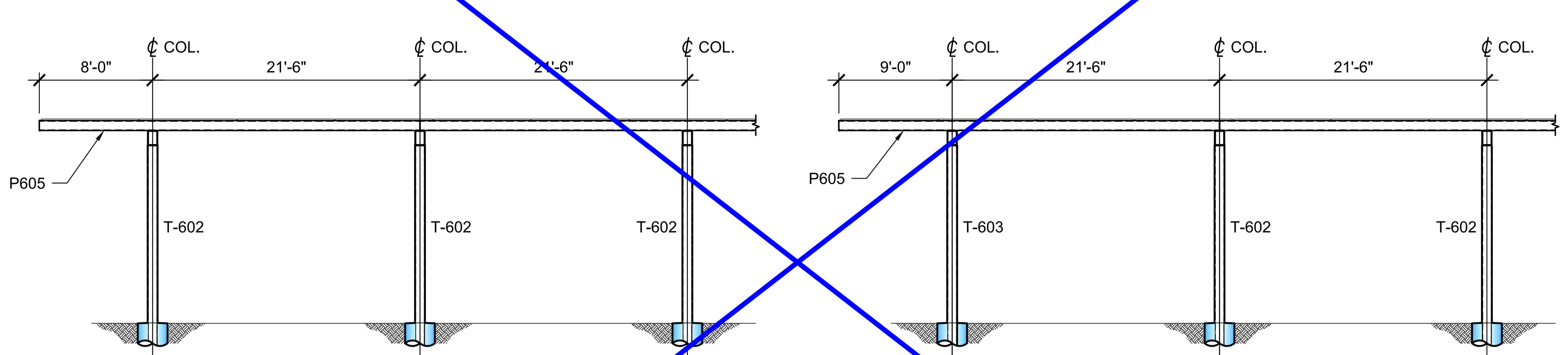

PURLIN CANTILEVER DOES NOT EXCEED LIMITS SHOWN IN PURLIN SCHEDULE '1/-' NO END MEMBER SIZE INCREASE REQUIRED.

EXAMPLE 1

PURLIN CANTILEVER EXCEEDS LIMITS SHOWN IN PURLIN SCHEDULE '1/-' END MEMBER SIZE INCREASE REQUIRED PER PURLIN CANTILEVER SCHEDULE.

EXAMPLE 2

2 / - PURLIN CONDITION EXAMPLES N.T.S.

IDENTIFICATION STAMP
DIV. OF THE STATE ARCHITECT
APP: 03-125900 INC:
REVIEWED FOR
SS ☑ FLS ☑ ACS ☑
DATE: 03/18/2026

4 STEL ENGINEERING
26030 ACERO
MISSION VIEJO, CA 92691
949.305.1150 | FAX 949.305.1420

M BAR C CONSTRUCTION INC.
1770 LA COSTA MEADOWS DRIVE SAN MARCOS, CA 92078
ERIK KRIVOKOPICH
PHONE: (760) 744-4131
FAX: (760) 744-4449
ERIK@MBARCONLINE.COM
LIC # 869960 B AND C51
(775) 787-8845

ENGINEER'S APPROVAL
REGISTERED PROFESSIONAL ENGINEER DUSTIN K. ROSEPINK S 5885 STRUCTURAL STATE OF CALIFORNIA

BID INFORMATION
THE STRUCTURES AND DESIGNS IN THIS PC ARE PROPRIETARY TO M BAR C CONSTRUCTION, INC. AND 4 S.T.E.L. ENGINEERING, INC. ALL SITES USING THIS PC: M BAR C CONSTRUCTION, INC. SHALL BE THE STEEL CONTRACTOR & 4 S.T.E.L. ENGINEERING, INC. SHALL BE THE SEOR. SEE THE STANDARD NOTES FOR PC USE ON S-1 FOR ADDITIONAL REQUIREMENTS.

PRE-CHECK (PC) DOCUMENT
CODE: 2022 CBC
A SEPARATE PROJECT APPLICATION FOR CONSTRUCTION IS REQUIRED

~~APPROVED
DIV. OF THE STATE ARCHITECT
APP: 04-123955 PC
REVIEWED FOR
SS ☑ FLS ☑ ACS ☑ CG ☐
DATE: 10/14/2024~~

SITE SPECIFIC INFORMATION
ALTADENA ELEMENTARY SCHOOL
743 E CALAVERAS ST.
ALTADENA, CA 91001

REVISIONS

MARK	DATE	DESCRIPTION

4 STEL JOB # MC02-V3-6
DATE 10-03-24
DRAWN BY GM
CHECKED RWS
UG 22.6.1
PURLIN SCHEDULE
S-16

DRAWINGS, SPECIFICATIONS AND OTHER DOCUMENTS, PREPARED BY THE DESIGN PROFESSIONAL (DP) AND THE DP'S CONSULTANTS ARE INSTRUMENTS OF SERVICE FOR USE SOLELY WITH RESPECT TO THIS PROJECT. THIS INCLUDES DOCUMENTS IN ELECTRONIC FORM. THE DP AND THE DP'S CONSULTANTS SHALL BE DEEMED THE AUTHORS AND OWNERS OF THEIR RESPECTIVE INSTRUMENTS OF SERVICE AND SHALL RETAIN ALL COMMON LAW, STATUTORY AND OTHER RESERVED RIGHTS, INCLUDING COPYRIGHTS. THE INSTRUMENTS OF SERVICE SHALL NOT BE USED BY THE OWNER FOR FUTURE ADDITIONS OR ALTERATIONS TO THIS PROJECT OR FOR OTHER PROJECTS, WITHOUT THE PRIOR WRITTEN AGREEMENT OF THE DP. ANY UNAUTHORIZED USE OF THE INSTRUMENTS OF SERVICE SHALL BE AT THE OWNER'S SOLE RISK AND WITHOUT LIABILITY TO THE DP AND THE DP'S CONSULTANTS.

NOTE: IF DWG. IS NOT 24 x 36, IT IS NOT FULL SIZE

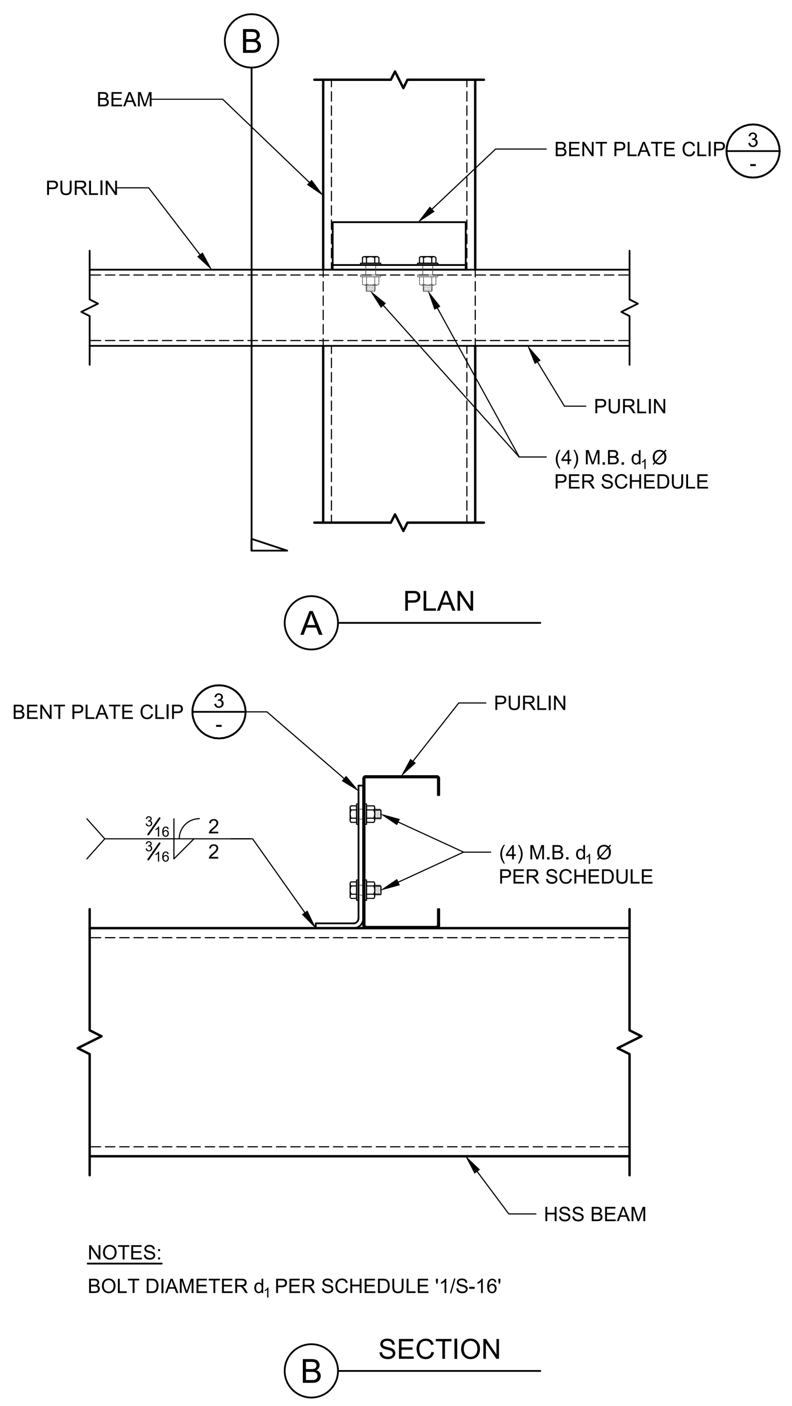

NOTES:
BOLT DIAMETER d_1 PER SCHEDULE '1/S-16'

12 PURLIN TO BEAM
1-1/2"=1'-0"

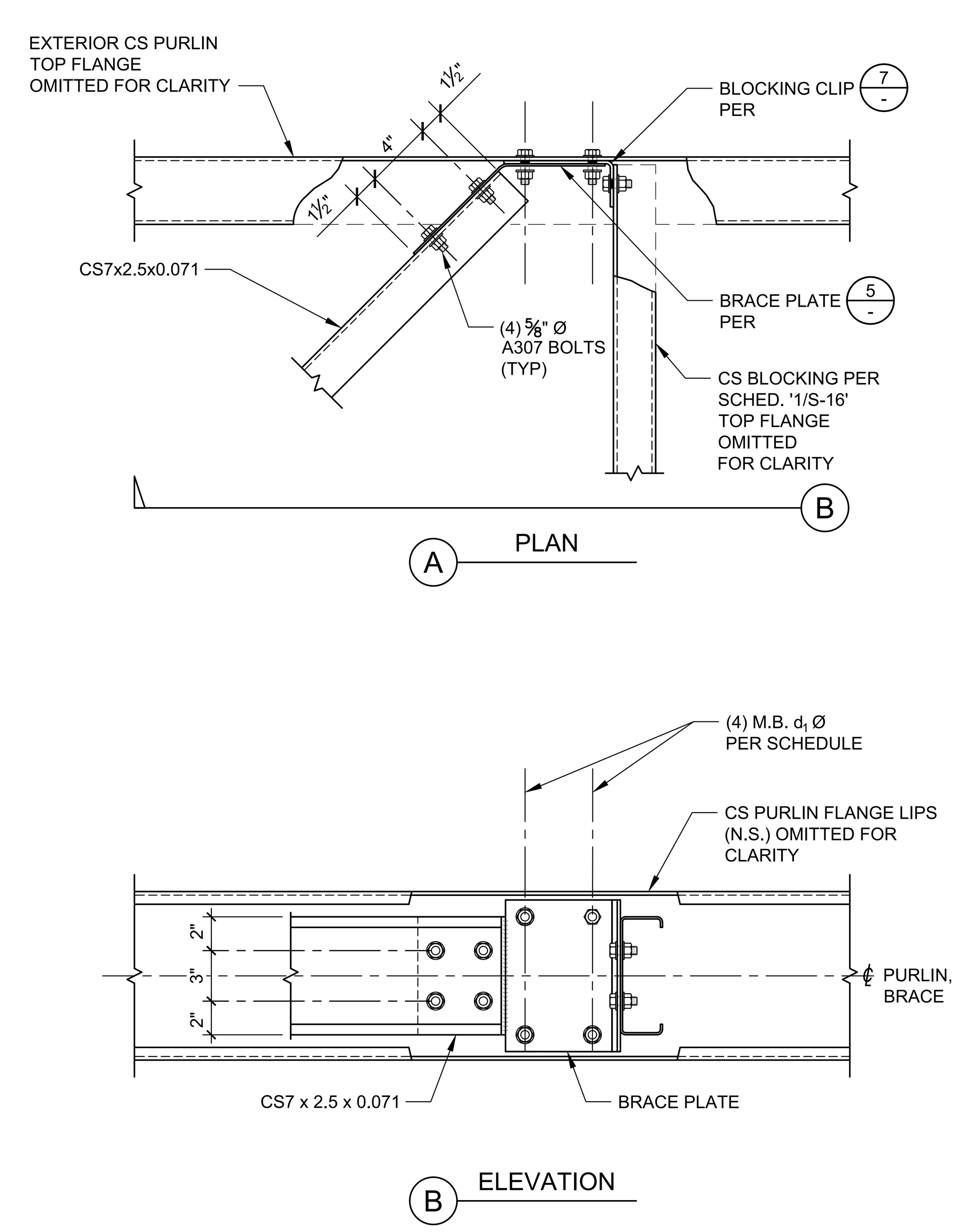

10 TYP. PURLIN BRACE AT EXTERIOR PURLIN
1-1/2"=1'-0"

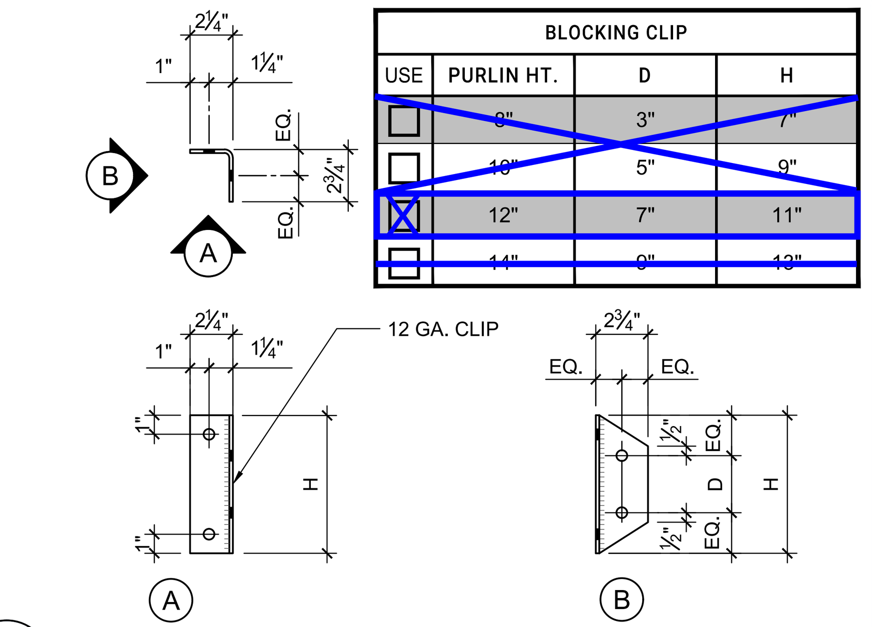

BLOCKING CLIP			
USE	PURLIN HT.	D	H
☐	8"	3"	7"
☐	10"	5"	9"
☒	12"	7"	11"
☐	14"	9"	13"

6 PURLIN BLOCKING CLIP
1-1/2"=1'-0"

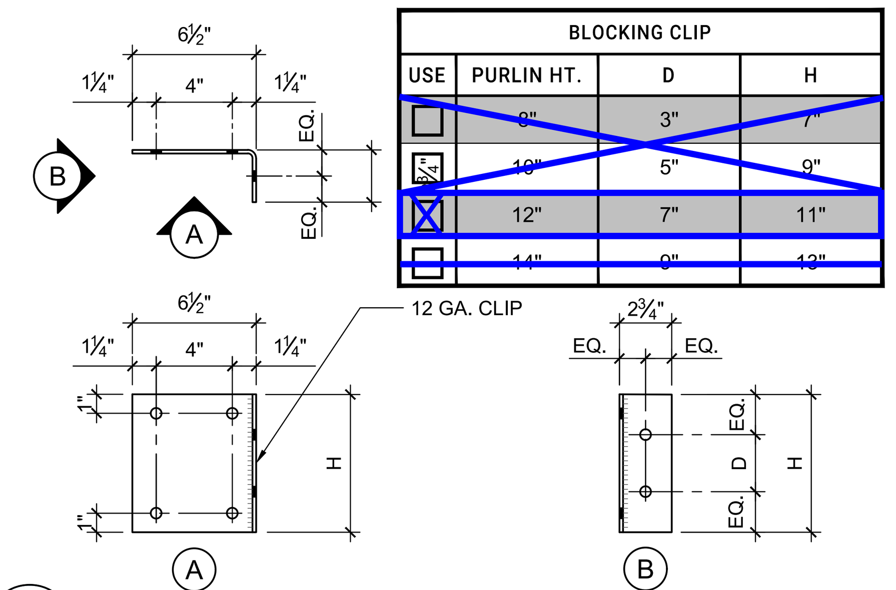

BLOCKING CLIP			
USE	PURLIN HT.	D	H
☐	8"	3"	7"
☐	10"	5"	9"
☒	12"	7"	11"
☐	14"	9"	13"

7 PURLIN BLOCKING CLIP AT BRACE
1-1/2"=1'-0"

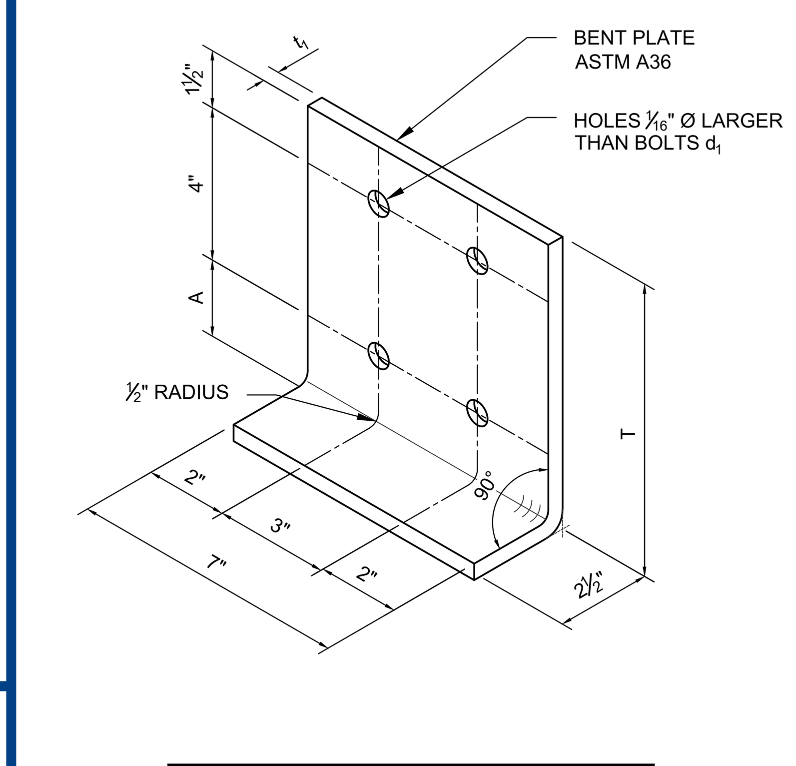

BENT PLATE CLIP			
USE	PURLIN HT.	T	A
☐	8"	7½"	2"
☐	10"	8½"	3"
☒	12"	9½"	4"
☐	14"	10½"	5"

NOTES:
1. CLIP PLATE THICKNESS 't_1' PER PURLIN SCHEDULE '1/S-16'.

3 PURLIN BEAM CLIP
3"=1'-0"

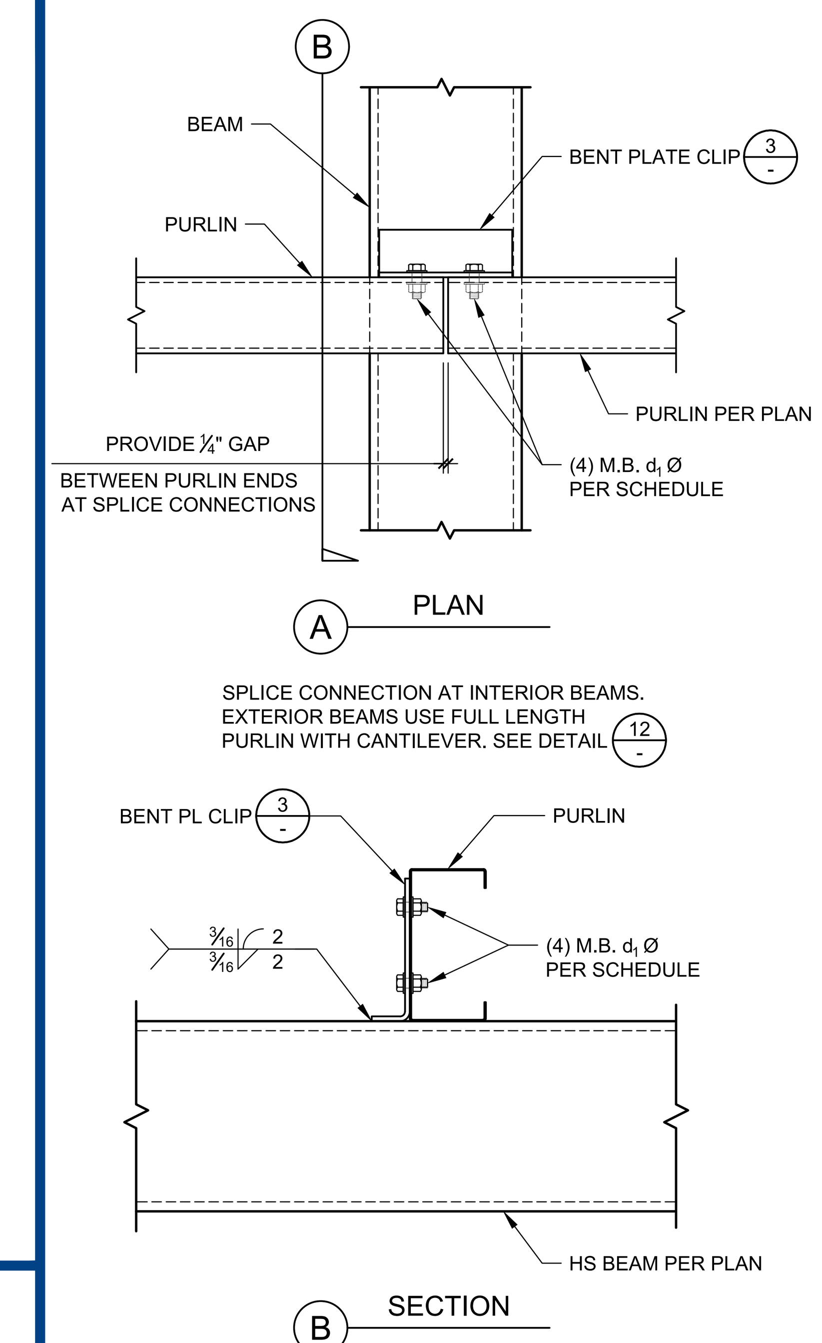

NOTES:
1. BOLT DIAMETER d_1 PER SCHEDULE '1/S-16'

1 PURLIN TO BEAM AT SPLICE
1-1/2"=1'-0"

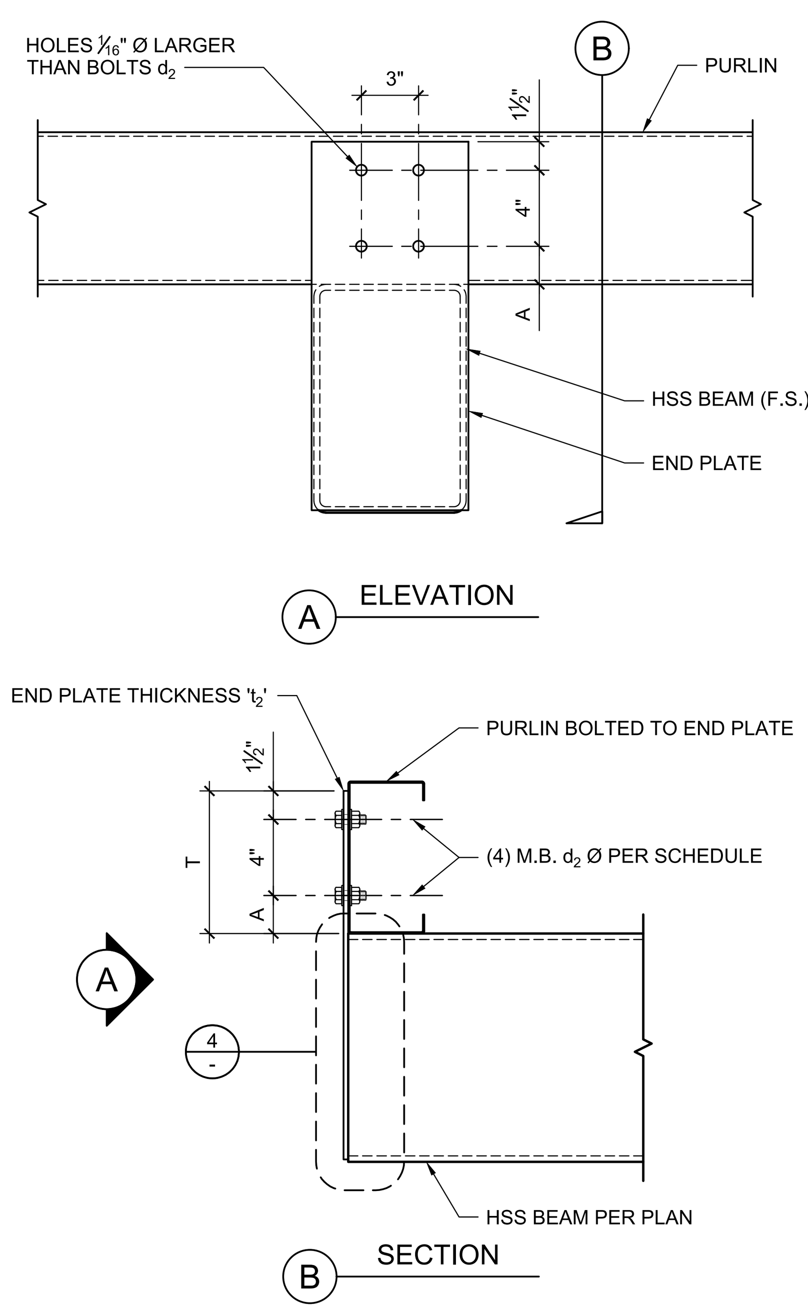

END PLATE TO BE ½" WIDER THAN BEAM.

END PLATE			
USE	PURLIN HT.	T	A
☐	8"	7½"	2"
☐	10"	8½"	3"
☒	12"	9½"	4"
☐	14"	10½"	5"

NOTES:
1. END PLATE THICKNESS 't_2' PER PURLIN SCHEDULE '1/S-16'.
2. BOLT DIAMETER d_2 PER SCHEDULE 1/S-16

13 PURLIN TO BEAM END PLATE
1-1/2"=1'-0"

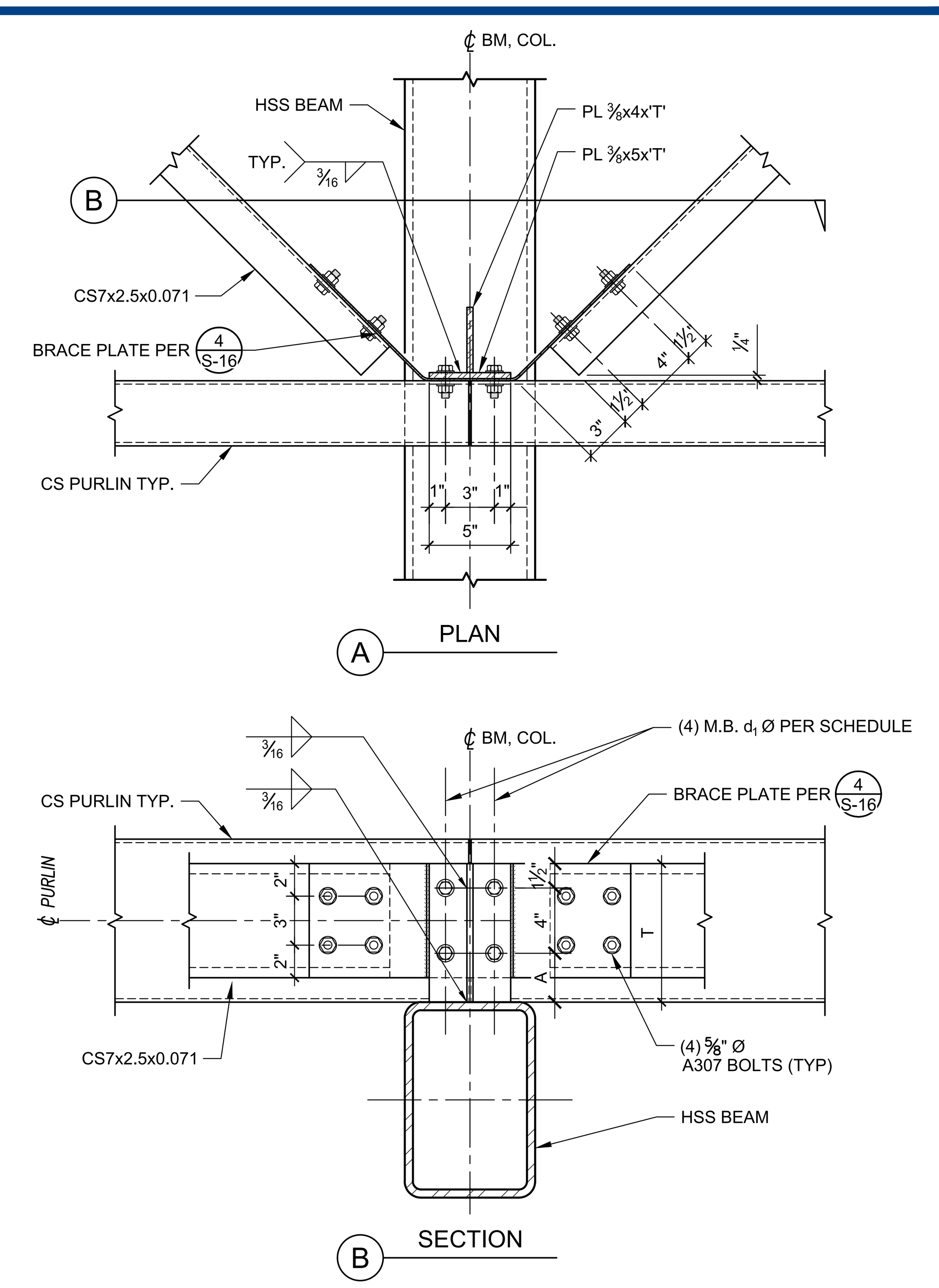

T PLATE			
USE	PURLIN HT.	T	A
☐	8"	7½"	2"
☐	10"	8½"	3"
☒	12"	9½"	4"
☐	14"	10½"	5"

11 TYP. PURLIN BRACE TO HSS BEAM
1-1/2"=1'-0"

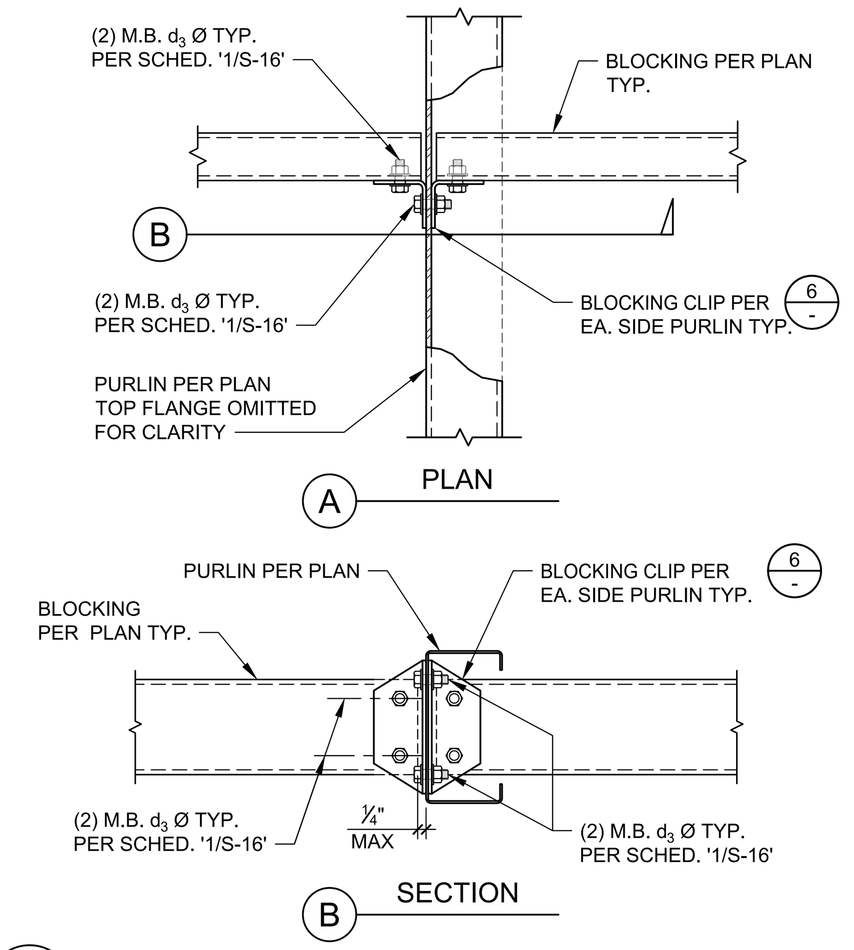

8 PURLIN BLOCKING
CONNECTION AT INTERIOR
1-1/2"=1'-0"

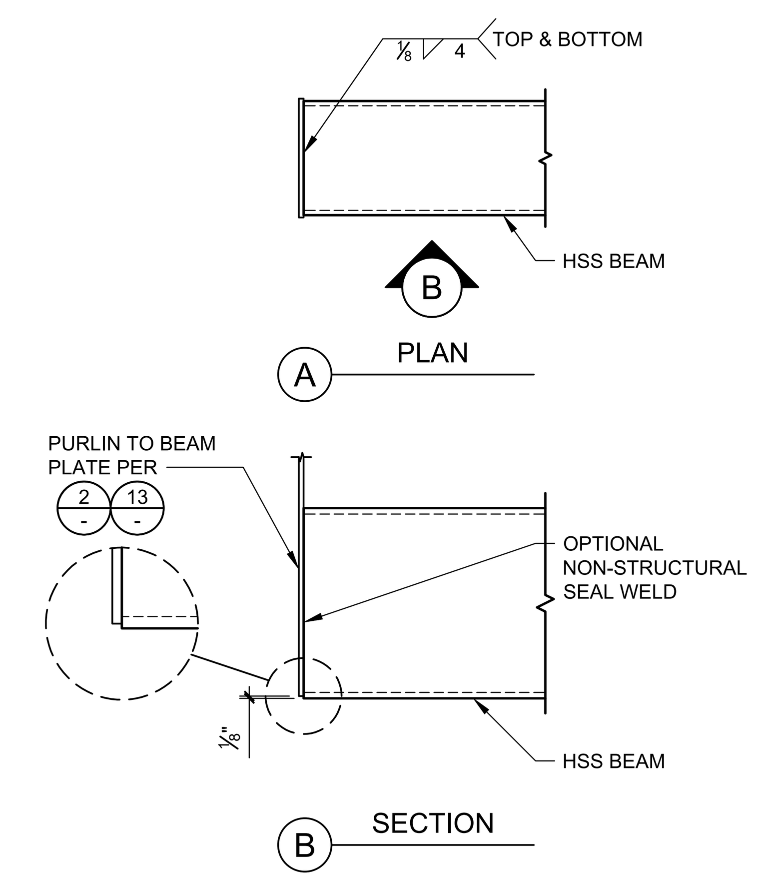

4 BEAM END PLATE
1-1/2"=1'-0"

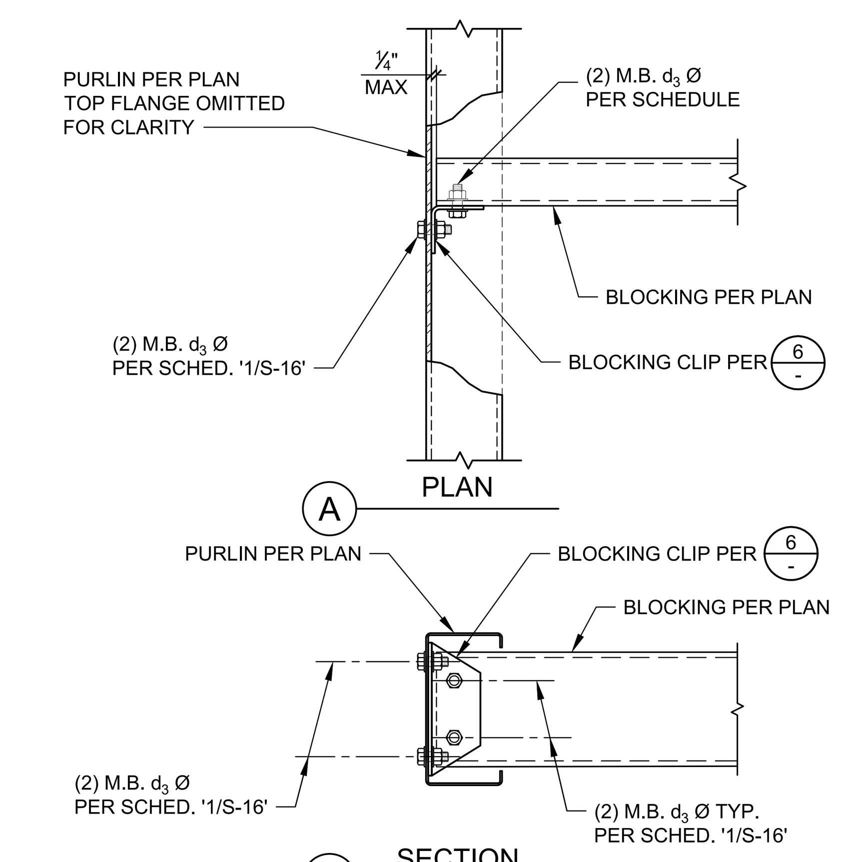

9 PURLIN BLOCKING
CONNECTION AT EXTERIOR
1-1/2"=1'-0"

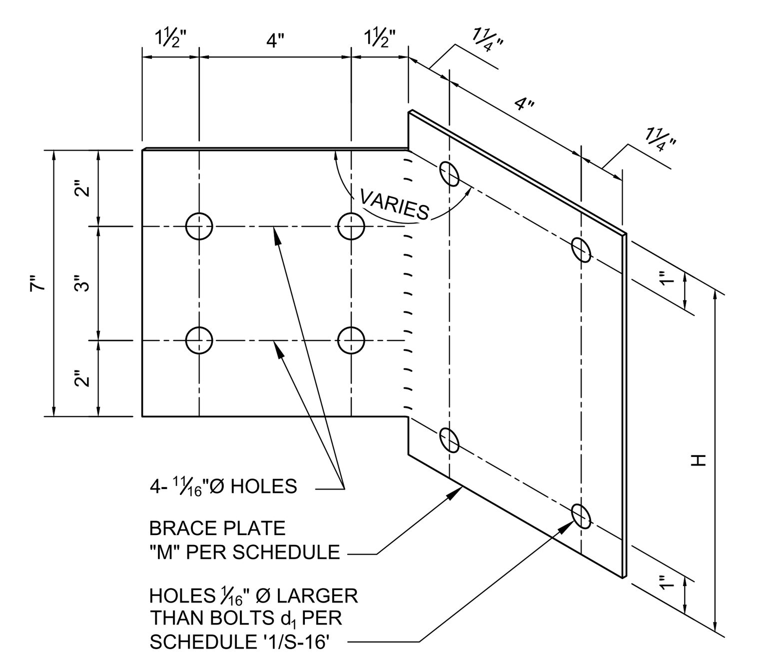

PURLIN BRACE PLATE		
USE	MAX. COLUMN SPACING "S" FROM 1/S-16	MATERIAL "M"
☒	"S" <= 28'-6"	12 GA 55 KSI
☐	"S" = 32'-6"	10 GA 55 KSI
☐	"S" = 35'-9"	10 GA 55 KSI

PURLIN BRACE PLATE		
USE	PURLIN HT.	H
☐	8"	7"
☐	10"	9"
☒	12"	11"
☐	14"	13"

5 PURLIN BRACE PLATE
3"=1'-0"

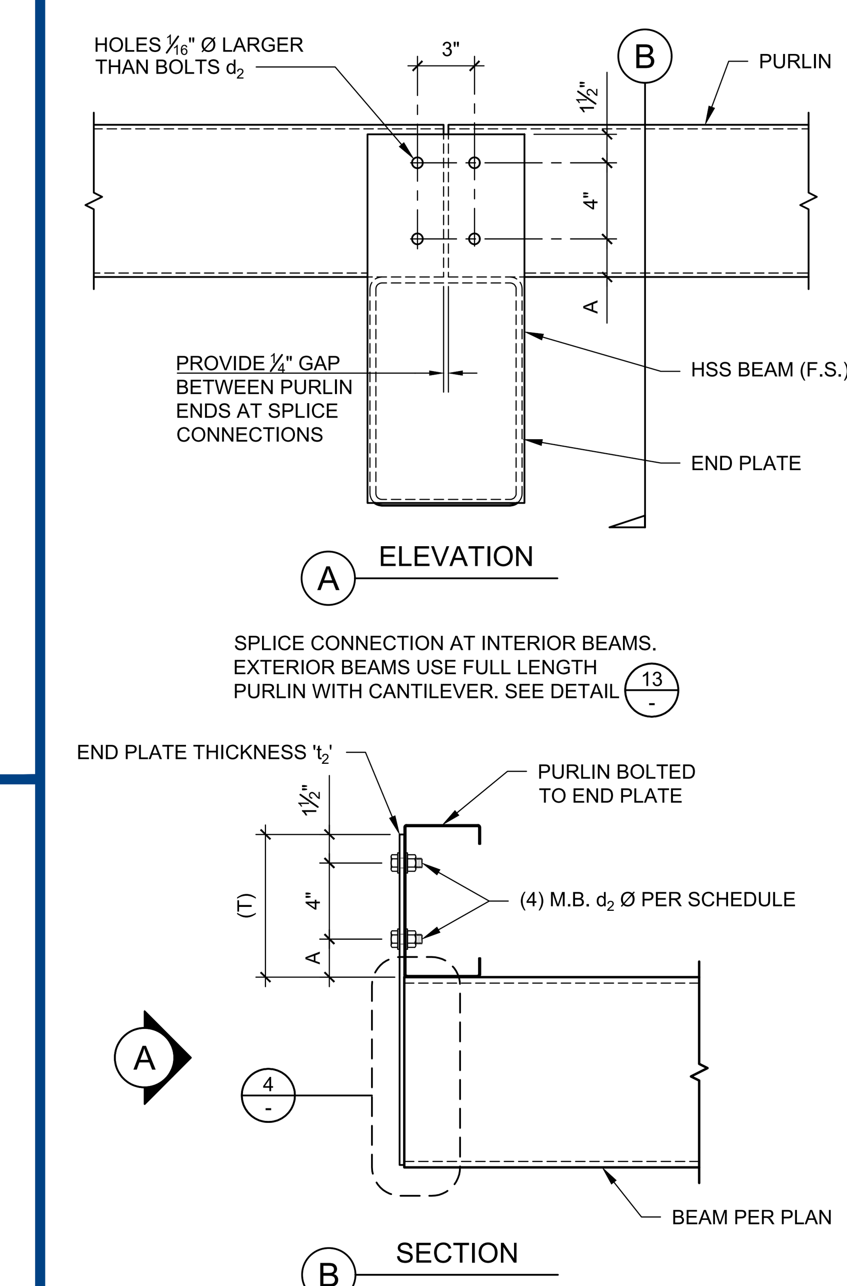

END PLATE TO BE ½" WIDER THAN BEAM.

END PLATE			
USE	PURLIN HT.	T	A
☐	8"	7½"	2"
☐	10"	8½"	3"
☒	12"	9½"	4"
☐	14"	10½"	5"

NOTES:
1. END PLATE THICKNESS 't_2' PER PURLIN SCHEDULE '1/S-16'.
2. BOLT DIAMETER d_2 PER SCHEDULE 1/S-16

2 PURLIN TO BEAM END PLATE AT SPLICE
1-1/2"=1'-0"

IDENTIFICATION STAMP
DIV. OF THE STATE ARCHITECT
APP: 03-125900 INC:
REVIEWED FOR
SS ☑ FLS ☑ ACS ☑
DATE: 03/18/2026

4 STEL ENGINEERING
26030 ACERO
MISSION VIEJO, CA 92691
949.305.1150 | FAX 949.305.1420

M BAR C CONSTRUCTION INC.
1770 LA COSTA MEADOWS DRIVE SAN MARCOS, CA 92078 ERIK KRIVOKOPICH
PHONE: (760) 744-4131 FAX: (760) 744-4449 ERIK@MBARCONLINE.COM
LIC # 869960 B AND C51 (775) 787-8845

ENGINEER'S APPROVAL

BID INFORMATION
THE STRUCTURES AND DESIGNS IN THIS PC ARE PROPRIETARY TO M BAR C CONSTRUCTION, INC. AND 4 S.T.E.L. ENGINEERING, INC. ALL SITES USING THIS PC: M BAR C CONSTRUCTION, INC. SHALL BE THE STEEL CONTRACTOR & 4 S.T.E.L. ENGINEERING, INC. SHALL BE THE SEOR. SEE THE STANDARD NOTES FOR PC USE ON S-1 FOR ADDITIONAL REQUIREMENTS.

PRE-CHECK (PC) DOCUMENT
CODE: 2022 CBC
A SEPARATE PROJECT APPLICATION FOR CONSTRUCTION IS REQUIRED

~~APPROVED
DIV. OF THE STATE ARCHITECT
APP: 04-123955 PC
REVIEWED FOR
SS ☑ FLS ☑ ACS ☑ CG ☐
DATE: 10/14/2024~~

SITE SPECIFIC INFORMATION
ALTADENA ELEMENTARY SCHOOL
743 E CALAVERAS ST.
ALTADENA, CA 91001

REVISIONS		
MARK	DATE	DESCRIPTION

4 STEL JOB #	MC02-V3-6
DATE	10-03-24
DRAWN BY	GM
CHECKED	RWS

UG 22.6.1

TYPICAL PURLIN DETAILS

S-17

DRAWINGS, SPECIFICATIONS AND OTHER DOCUMENTS, PREPARED BY THE DESIGN PROFESSIONAL (DP) AND THE DP'S CONSULTANTS ARE INSTRUMENTS OF SERVICE FOR USE SOLELY WITH RESPECT TO THIS PROJECT. THIS INCLUDES DOCUMENTS IN ELECTRONIC FORM. THE DP AND THE DP'S CONSULTANTS SHALL BE DEEMED THE AUTHORS AND OWNERS OF THEIR RESPECTIVE INSTRUMENTS OF SERVICE AND SHALL RETAIN ALL COMMON LAW, STATUTORY AND OTHER RESERVED RIGHTS, INCLUDING COPYRIGHTS. THE INSTRUMENTS OF SERVICE SHALL NOT BE USED BY THE OWNER FOR FUTURE ADDITIONS OR ALTERATIONS TO THIS PROJECT OR FOR OTHER PROJECTS, WITHOUT THE PRIOR WRITTEN AGREEMENT OF THE DP. ANY UNAUTHORIZED USE OF THE INSTRUMENTS OF SERVICE SHALL BE AT THE OWNER'S SOLE RISK AND WITHOUT LIABILITY TO THE DP AND THE DP'S CONSULTANTS.

NOTE: IF DWG. IS NOT 24 x 36, IT IS NOT FULL SIZE

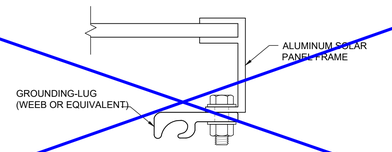

☐ OPTION UTILIZED
9 - OPTIONAL GROUNDING LUG
1'-0" = 1'-0"

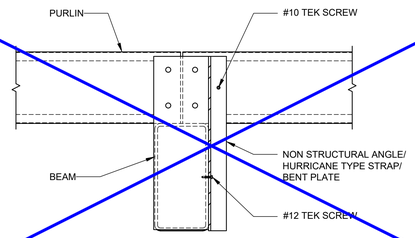

☐ OPTION UTILIZED
10 - PURLIN GROUNDING DETAIL
1-1/2" = 1'-0"

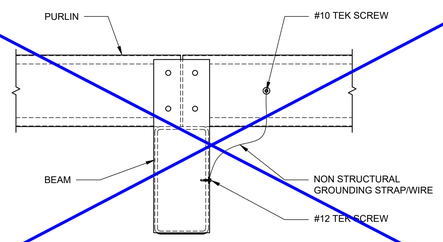

☐ OPTION UTILIZED
11 - PURLIN GROUNDING DETAIL
1-1/2" = 1'-0"

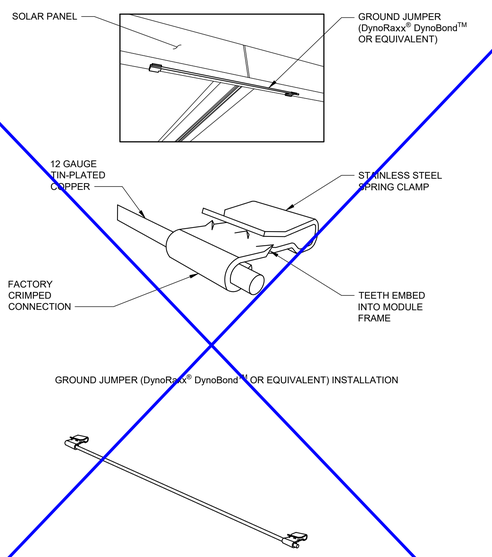

NOTE:
TO BE USED AS A JUMPER BETWEEN MODULES AND ROWS WHICH MAKES THE MODULE FRAME THE MEDIUM FOR THE EQUIPMENT GROUND PATH.

GROUND JUMPER (DynoRaxx® DynoBond™ OR EQUIVALENT)

☐ OPTION UTILIZED
12 - OPTIONAL GROUND JUMPER
N.T.S.

12 GA PURLIN

☐ OPTION UTILIZED

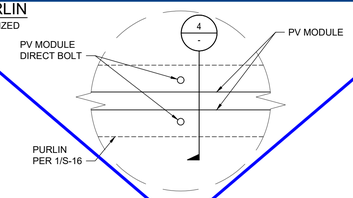

14 GA PURLIN W/ BACK PLT

☐ OPTION UTILIZED

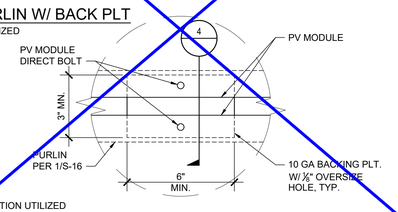

☐ OPTION UTILIZED
14 - LANDSCAPE CONNECTION DETAILS
3" = 1'-0"

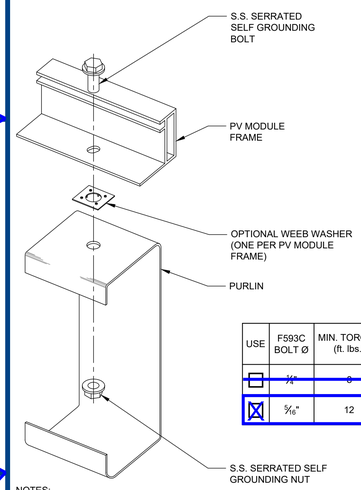

USE	F593C BOLT Ø	MIN. TORQUE (ft. lbs.)	MAX. TORQUE (ft. lbs.)
☐	1/4"	8	10
☒	5/16"	12	15

NOTES:
1. REFER TO 'PV PANEL AND PV PANEL FASTENER INSTALLATION PROCEDURE' NOTES ON SHEET S-3.
2. BOLT SIZE SHALL BE SELECTED FROM THE SOLAR PANEL MANUFACTURER'S DOCUMENTATION SUBMITTED TO DSA AT PLAN REVIEW.

☒ OPTION UTILIZED
7 - SELF GROUNDING BOLT
6"=1'-0"

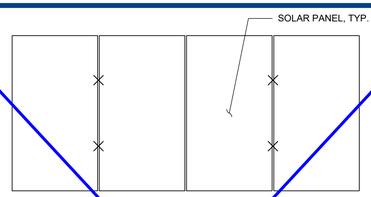

EVEN NUMBER OF MODULES IN ROW

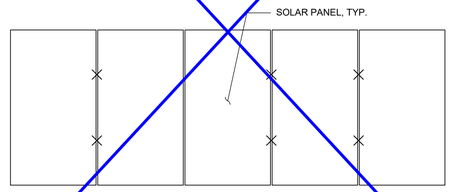

ODD NUMBER OF MODULES IN ROW

NOTE:
X DENOTES WEEB-KSR OR CCR LOCATION

☐ OPTION UTILIZED
8 - OPTIONAL WEEB-KSR OR CCR LAYOUT
3/8" = 1'-0"

12 GA PURLIN

☐ OPTION UTILIZED

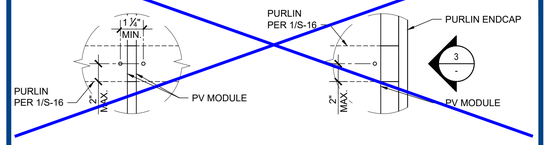

14 GA PURLIN / W BACK PLT

☒ OPTION UTILIZED

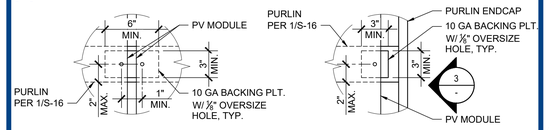

☒ OPTION UTILIZED
13 - PORTRAIT CONNECTION DETAILS
1 1/2" = 1'-0"

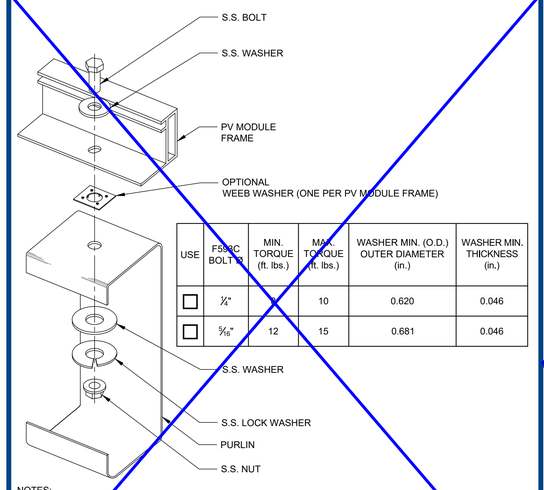

USE	F593C BOLT Ø	MIN. TORQUE (ft. lbs.)	MAX. TORQUE (ft. lbs.)	WASHER MIN. (O.D.) OUTER DIAMETER (in.)	WASHER MIN. THICKNESS (in.)
☐	1/4"		10	0.620	0.046
☐	5/16"	12	15	0.681	0.046

NOTES:
1. REFER TO 'PV PANEL AND PV PANEL FASTENER INSTALLATION PROCEDURE' NOTES ON SHEET S-3.
2. BOLT SIZE SHALL BE SELECTED FROM THE SOLAR PANEL MANUFACTURER'S DOCUMENTATION SUBMITTED TO DSA AT PLAN REVIEW.

☐ OPTION UTILIZED
5 - SOLAR PANEL DIRECT BOLT ASSEMBLY
6"=1'-0"

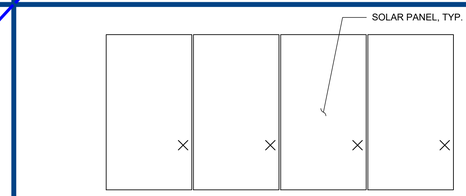

EVEN NUMBER OF MODULES IN ROW

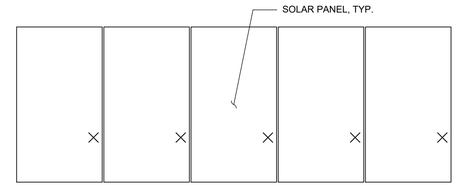

ODD NUMBER OF MODULES IN ROW

NOTE:
X DENOTES WEEB-ADC LOCATION

☒ OPTION UTILIZED
6 - OPTIONAL WEEB-ADC LAYOUT
3/8" = 1'-0"

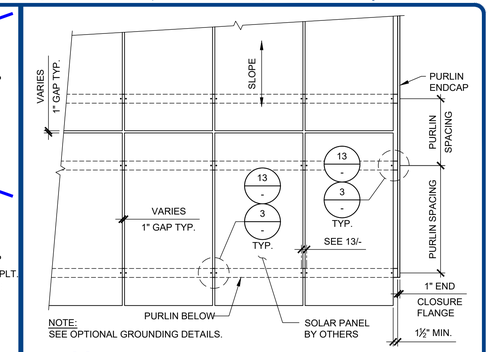

NOTE:
SEE OPTIONAL GROUNDING DETAILS.

☒ OPTION UTILIZED
1 - PORTRAIT SOLAR PANEL LAYOUT
3/8" = 1'-0"

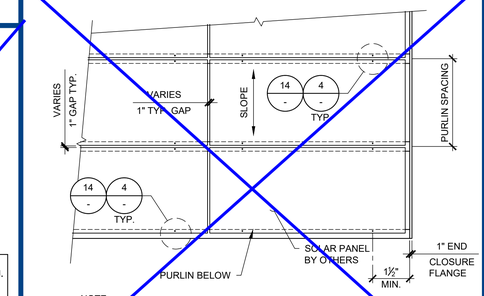

NOTE:
SEE OPTIONAL GROUNDING DETAILS.

☐ OPTION UTILIZED
2 - LANDSCAPE SOLAR PANEL LAYOUT
3/8" = 1'-0"

NOTES:
1. HOLES IN PURLIN SHALL BE 9/16"Ø LARGER THAN BOLTS UTILIZED.
2. FASTENERS SHALL BE TORQUED PER 5/- OR 7/-.
3. BOLT STACK SHALL BE INSTALLED PER 5/- OR 7/-.
4. BOLT SIZE SHALL BE SELECTED FROM THE SOLAR PANEL MANUFACTURER'S DOCUMENTATION SUBMITTED TO DSA AT PLAN REVIEW.

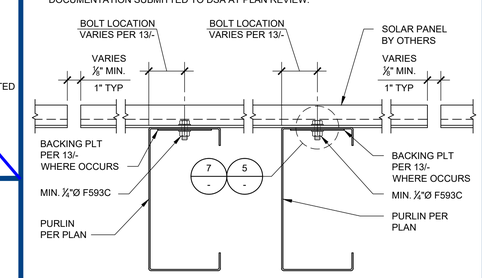

☒ OPTION UTILIZED
3 - PORTRAIT DIRECT BOLT
3" = 1'-0"

NOTES:
1. HOLES IN PURLIN SHALL BE 9/16"Ø LARGER THAN BOLTS UTILIZED.
2. FASTENERS SHALL BE TORQUED PER 5/- OR 7/-.
3. BOLT STACK SHALL BE INSTALLED PER 5/- OR 7/-.
4. BOLT SIZE SHALL BE SELECTED FROM THE SOLAR PANEL MANUFACTURER'S DOCUMENTATION SUBMITTED TO DSA AT PLAN REVIEW.

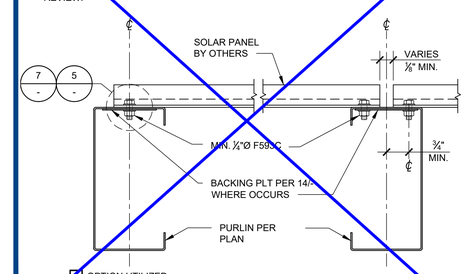

☐ OPTION UTILIZED
4 - LANDSCAPE DIRECT BOLT
3" = 1'-0"

IDENTIFICATION STAMP
DIV. OF THE STATE ARCHITECT
APP: 03-125900 INC:
REVIEWED FOR
SS ☑ FLS ☑ ACS ☑
DATE: 03/18/2026

4 STEEL ENGINEERING
26030 ACERO
MISSION VIEJO, CA 92691
949.305.1150 | FAX 949.305.1420

M BAR C CONSTRUCTION INC.
1770 LA COSTA MEADOWS DRIVE
SAN MARCOS, CA 92078
ERIK KRIVOKOPICH
PHONE: (760) 744-4131
FAX: (760) 744-4449
ERIK@MBARCONLINE.COM
LIC # 861960
B AND C51
(770) 787-8845

ENGINEER'S APPROVAL

REGISTERED PROFESSIONAL ENGINEER
DUSTIN K. ROSENTHAL
S 5885
10-18-24
STATE OF CALIFORNIA

BID INFORMATION

THE STRUCTURES AND DESIGNS IN THIS PC ARE PROPRIETARY TO M BAR C CONSTRUCTION, INC. AND 4 S.T.E.L. ENGINEERING, INC. ALL SITES USING THIS PC: M BAR C CONSTRUCTION, INC. SHALL BE THE STEEL CONTRACTOR & 4 S.T.E.L. ENGINEERING, INC. SHALL BE THE SEOR. SEE THE STANDARD NOTES FOR PC USE ON S-1 FOR ADDITIONAL REQUIREMENTS.

PRE-CHECK (PC) DOCUMENT

CODE: 2022 CBC

A SEPARATE PROJECT APPLICATION FOR CONSTRUCTION IS REQUIRED

APPROVED
DIV. OF THE STATE ARCHITECT
APP: 04-123955 PC
REVIEWED FOR
SS ☑ FLS ☑ ACS ☑ CG ☐
DATE: 10/14/2024

SITE SPECIFIC INFORMATION

ALTADENA ELEMENTARY SCHOOL
743 E CALAVERAS ST.
ALTADENA, CA 91001

REVISIONS

MARK	DATE	DESCRIPTION

4 STEL JOB #	MC02-V3-6
DATE	10-03-24
DRAWN BY	GM
CHECKED	RWS

UG 22.6.1

TYPICAL SOLAR PANEL DETAILS

S-18

DRAWINGS, SPECIFICATIONS AND OTHER DOCUMENTS, PREPARED BY THE DESIGN PROFESSIONAL (DP) AND THE DP'S CONSULTANTS ARE INSTRUMENTS OF SERVICE FOR USE SOLELY WITH RESPECT TO THIS PROJECT. THIS INCLUDES DOCUMENTS IN ELECTRONIC FORM. THE DP AND THE DP'S CONSULTANTS SHALL BE DEEMED THE AUTHORS AND OWNERS OF THEIR RESPECTIVE INSTRUMENTS OF SERVICE AND SHALL RETAIN ALL COMMON LAW, STATUTORY AND OTHER RESERVED RIGHTS, INCLUDING COPYRIGHTS. THE INSTRUMENTS OF SERVICE SHALL NOT BE USED BY THE OWNER FOR FUTURE ADDITIONS OR ALTERATIONS TO THIS PROJECT OR FOR OTHER PROJECTS, WITHOUT THE PRIOR WRITTEN AGREEMENT OF THE DP. ANY UNAUTHORIZED USE OF THE INSTRUMENTS OF SERVICE SHALL BE AT THE OWNER'S SOLE RISK AND WITHOUT LIABILITY TO THE DP AND THE DP'S CONSULTANTS.

NOTE: IF DWG. IS NOT 24 x 36, IT IS NOT FULL SIZE

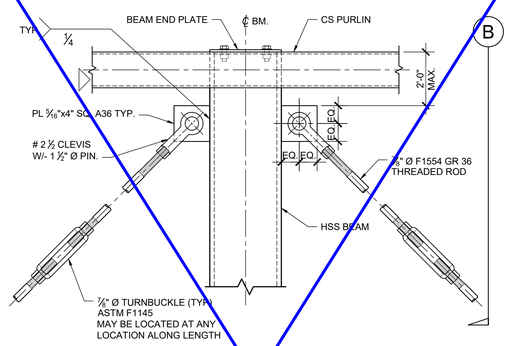

A PLAN

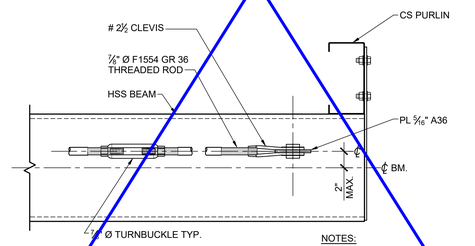

B ELEVATION

NOTES:
1. EACH ROD REQUIRES 1 TURNBUCKLE MINIMUM HOWEVER MORE THAN 1 MAY BE USED.
2. THREADED ROD SAG:
   - MIN. DEFLECTION ¼"
   - MAX. DEFLECTION ¾"
3. THREADED ROD CAN BE LOCATED 2" MAX. ABOVE OR BELOW CENTER OF BEAM.

1 TYP OT BEAM BRACE AT BEAM END
1-1/2"=1'-0"

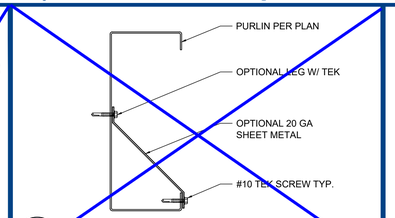

8 BIRD STOP
3"=1'-0"

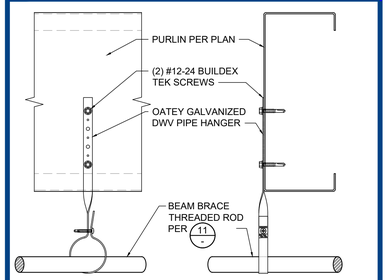

8A BEAM BRACE ROD SUPPORT
3"=1'-0"

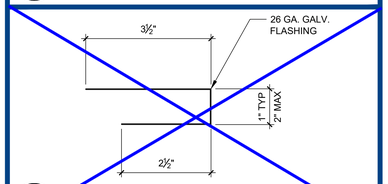

9 DECK FLASHING
6"=1'-0"

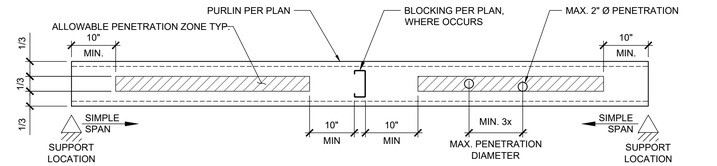

SIMPLE SUPPORT SPAN

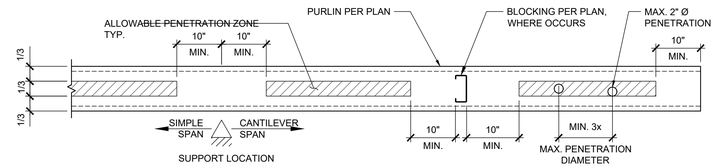

CANTILEVER SPAN

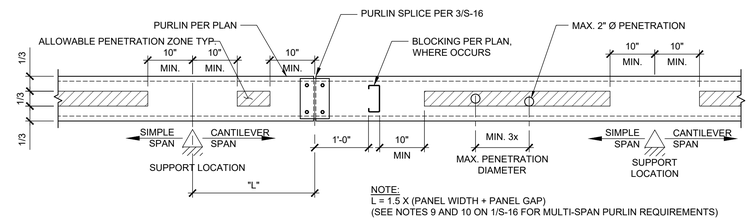

NOTE:
L = 1.5 X (PANEL WIDTH + PANEL GAP)
(SEE NOTES 9 AND 10 ON 1/S-16 FOR MULTI-SPAN PURLIN REQUIREMENTS)

MULTI SUPPORT SPAN

NOTE:
IF MORE THAN 5 PENETRATIONS PER SPAN ARE NEEDED, CONTRACTOR TO SUBMIT AN RFI TO DESIGN PROFESSIONAL IN GENERAL RESPONSIBLE CHARGE TO ENSURE REQUIREMENTS OF THIS DETAIL ARE MET AND TO JUSTIFY THE QUANTITY OF PENETRATIONS NEEDED.

4 ALLOWABLE PURLIN PENETRATIONS
3/4"=1'-0"

NOTE:
ALL STRUCTURAL CONNECTION POINTS REQUIRED BY MANUFACTURER TO MAINTAIN WARRANTY TO BE FILLED. THIS MAY EXCEED THE MINIMUM NUMBER OF SCREWS.

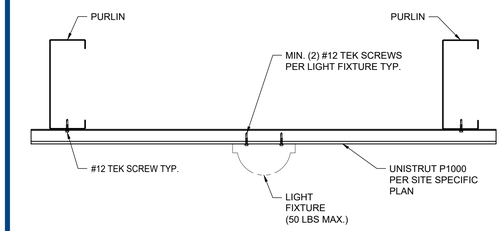

1 LIGHT INSTALLATION OPTIONS
1-1/2"=1'-0"

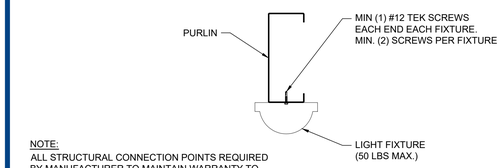

NOTE:
ALL STRUCTURAL CONNECTION POINTS REQUIRED BY MANUFACTURER TO MAINTAIN WARRANTY TO BE FILLED. THIS MAY EXCEED THE MINIMUM NUMBER OF SCREWS.

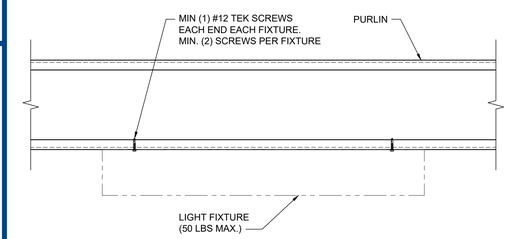

2 ALTERNATE LIGHT INSTALLATION OPTIONS
1-1/2"=1'-0"

OPTION 1

OPTION 2 OPTION 3

3 CONDUIT SUPPORT/ LOCATION OPTIONS
1-1/2"=1'-0"

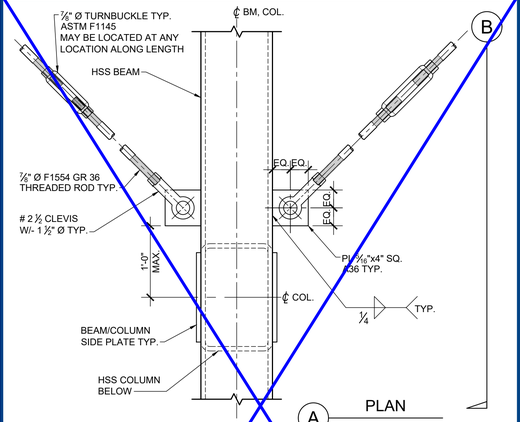

A PLAN

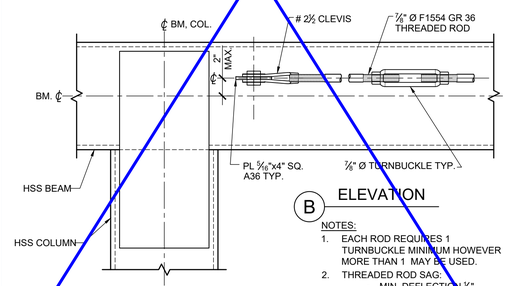

B ELEVATION

NOTES:
1. EACH ROD REQUIRES 1 TURNBUCKLE MINIMUM HOWEVER MORE THAN 1 MAY BE USED.
2. THREADED ROD SAG:
   - MIN. DEFLECTION ¼"
   - MAX. DEFLECTION ¾"
3. THREADED ROD CAN BE LOCATED 2" MAX. ABOVE OR BELOW CENTER OF BEAM.

12 TYP OT BEAM BRACE AT COLUMN
1-1/2"=1'-0"

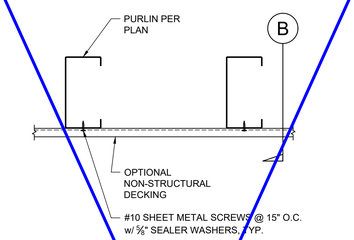

A ELEVATION

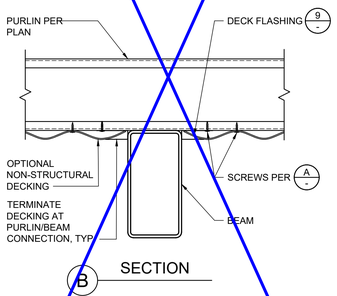

B SECTION

NOTES:
1. SOLAR PANELS NOT SHOWN.
2. PURLIN TO BEAM CONNECTION NOT SHOWN.
3. NON-STRUCTURAL DECKING MAY BE INSTALLED ONLY IF DECKING WEIGHT COMBINED WITH SOLAR SYSTEM WEIGHT AND SPRINKLERS, IF APPLICABLE, IS LESS THAN OR EQUAL TO 3.5 psf.

10 OPTIONAL DECKING
1-1/2"=1'-0"

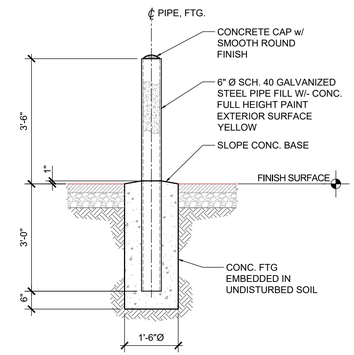

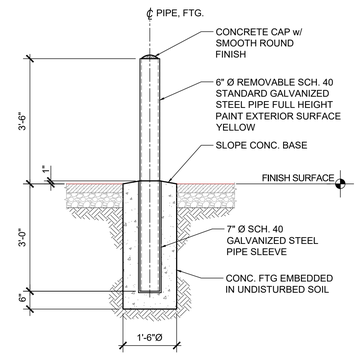

5 TYPICAL BOLLARD
1/2"=1'-0"

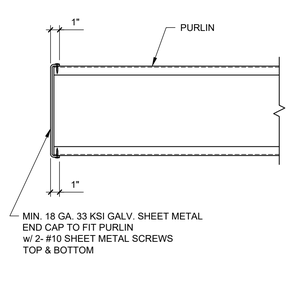

7 PURLIN END CAP
1-1/2"=1'-0"

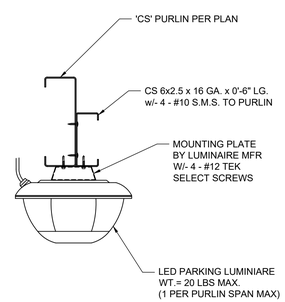

6 ALTERNATIVE LIGHT INSTALLATION DETAIL
1-1/2"=1'-0"

IDENTIFICATION STAMP
DIV. OF THE STATE ARCHITECT
APP: 03-125900 INC:
REVIEWED FOR
SS ☑ FLS ☑ ACS ☑
DATE: 03/18/2026

4 STEEL ENGINEERING
26030 ACERO
MISSION VIEJO, CA 92691
949.305.1150 | FAX 949.305.1420

M BAR C CONSTRUCTION INC.
1770 LA COSTA MEADOWS DRIVE
SAN MARCOS, CA 92078
ERIK KRIVOKOPICH
PHONE: (760) 744-4131
FAX: (760) 744-4449
ERIK@MBARCCONLINE.COM
LIC # 861960
B AND C51
(770) 787-8845

ENGINEER'S APPROVAL

REGISTERED PROFESSIONAL ENGINEER
DUSTIN K. ROSENTHAL
S 5885
12-31-26
STATE OF CALIFORNIA

BID INFORMATION
THE STRUCTURES AND DESIGNS IN THIS PC ARE PROPRIETARY TO M BAR C CONSTRUCTION, INC. AND 4 S.T.E.L. ENGINEERING, INC. ALL SITES USING THIS PC: M BAR C CONSTRUCTION, INC. SHALL BE THE STEEL CONTRACTOR & 4 S.T.E.L. ENGINEERING, INC. SHALL BE THE SEOR. SEE THE STANDARD NOTES FOR PC USE ON S-1 FOR ADDITIONAL REQUIREMENTS.

PRE-CHECK (PC) DOCUMENT
CODE: 2022 CBC
A SEPARATE PROJECT APPLICATION FOR CONSTRUCTION IS REQUIRED

APPROVED
DIV. OF THE STATE ARCHITECT
APP: 04-123955 PC
REVIEWED FOR
SS ☑ FLS ☑ ACS ☑ CG ☐
DATE: 10/14/2024

SITE SPECIFIC INFORMATION
ALTADENA ELEMENTARY SCHOOL
743 E CALAVERAS ST.
ALTADENA, CA 91001

REVISIONS

MARK	DATE	DESCRIPTION

4 STEL JOB #	MC02-V3-6
DATE	10-03-24
DRAWN BY	GM
CHECKED	RWS

UG 22.6.1

BEAM BRACING & MISC. DETAILS

S-19

DRAWINGS, SPECIFICATIONS AND OTHER DOCUMENTS, PREPARED BY THE DESIGN PROFESSIONAL (DP) AND THE DP'S CONSULTANTS ARE INSTRUMENTS OF SERVICE FOR USE SOLELY WITH RESPECT TO THIS PROJECT. THIS INCLUDES DOCUMENTS IN ELECTRONIC FORM. THE DP AND THE DP'S CONSULTANTS SHALL BE DEEMED THE AUTHORS AND OWNERS OF THEIR RESPECTIVE INSTRUMENTS OF SERVICE AND SHALL RETAIN ALL COMMON LAW, STATUTORY AND OTHER RESERVED RIGHTS, INCLUDING COPYRIGHTS. THE INSTRUMENTS OF SERVICE SHALL NOT BE USED BY THE OWNER FOR FUTURE ADDITIONS OR ALTERATIONS TO THIS PROJECT OR FOR OTHER PROJECTS, WITHOUT THE PRIOR WRITTEN AGREEMENT OF THE DP. ANY UNAUTHORIZED USE OF THE INSTRUMENTS OF SERVICE SHALL BE AT THE OWNER'S SOLE RISK AND WITHOUT LIABILITY TO THE DP AND THE DP'S CONSULTANTS.

NOTE: IF DWG. IS NOT 24 x 36, IT IS NOT FULL SIZE

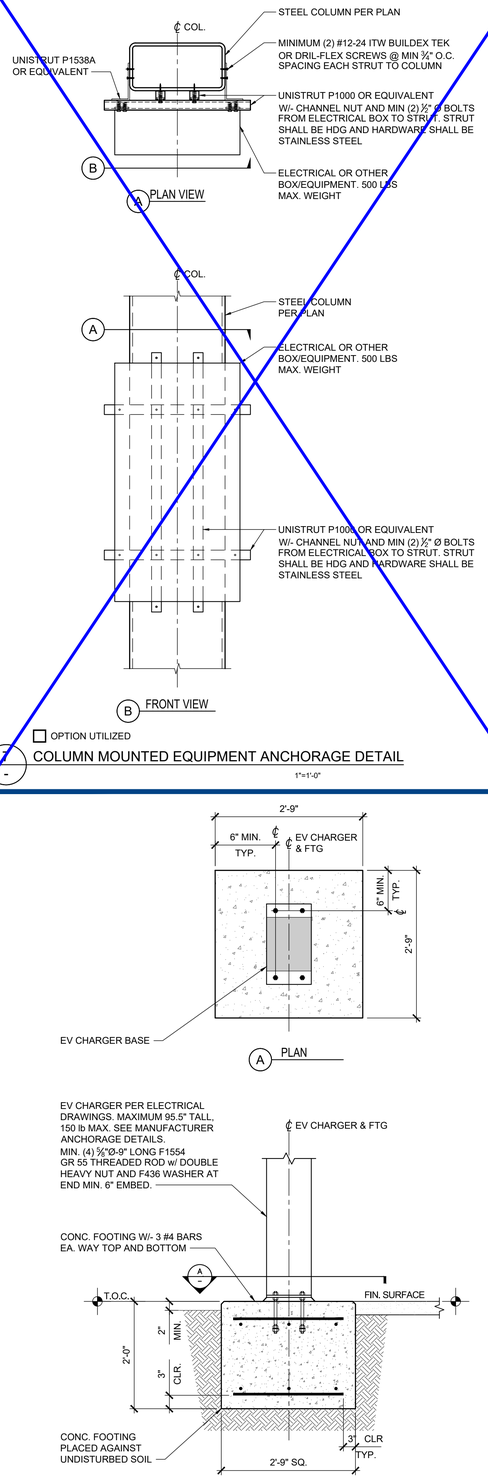

OPTION UTILIZED

5 COLUMN MOUNTED EQUIPMENT ANCHORAGE DETAIL

1"=1'-0"

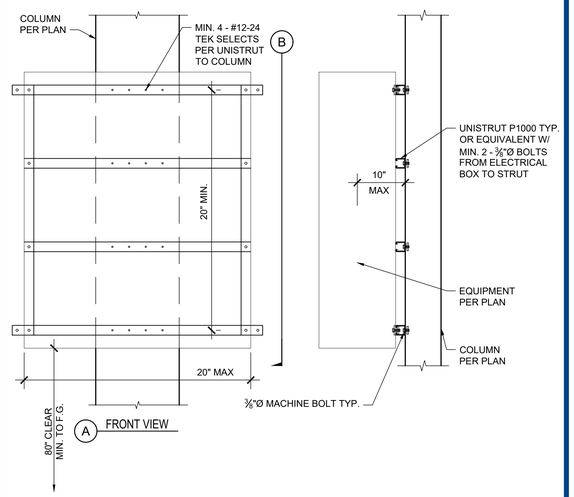

NOTES:
1. 500 lb MAX EQUIPMENT WEIGHT
2. FOR COLUMN THICKER ½" PRE DRILL COLUMN WITH DRILL BIT EQUAL TO ROOT DIAMETER OF SCREW USED. (I.E. SHAFT EXCLUDING THREADS)

OPTION UTILIZED

5 EQUIPMENT TO COLUMN CONNECTION

1"=1'-0"

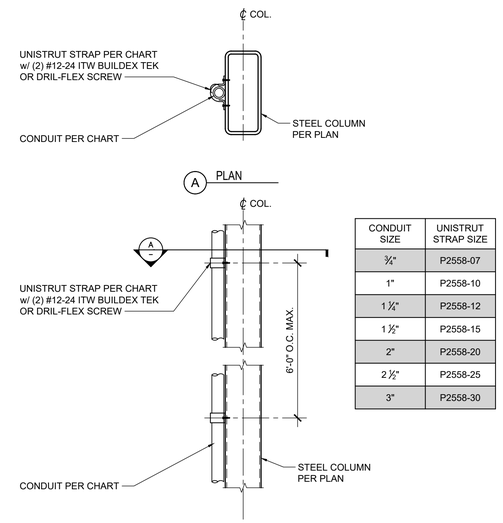

CONDUIT SIZE	UNISTRUT STRAP SIZE
¾"	P2558-07
1"	P2558-10
1 ¼"	P2558-12
1 ½"	P2558-15
2"	P2558-20
2 ½"	P2558-25
3"	P2558-30

NOTE:
1. FOR COLUMN THICKER ½" PRE DRILL COLUMN WITH DRILL BIT EQUAL TO ROOT DIAMETER OF SCREW USED. (I.E. SHAFT EXCLUDING THREADS)
2. PIPE CONDUIT MAY BE MOUNTED TO BOTH SIDES OF COLUMN. NOT SHOWN IN DETAIL FOR CLARITY.

OPTION UTILIZED

3 PIPE/ CONDUIT MOUNTING

1"=1'-0"

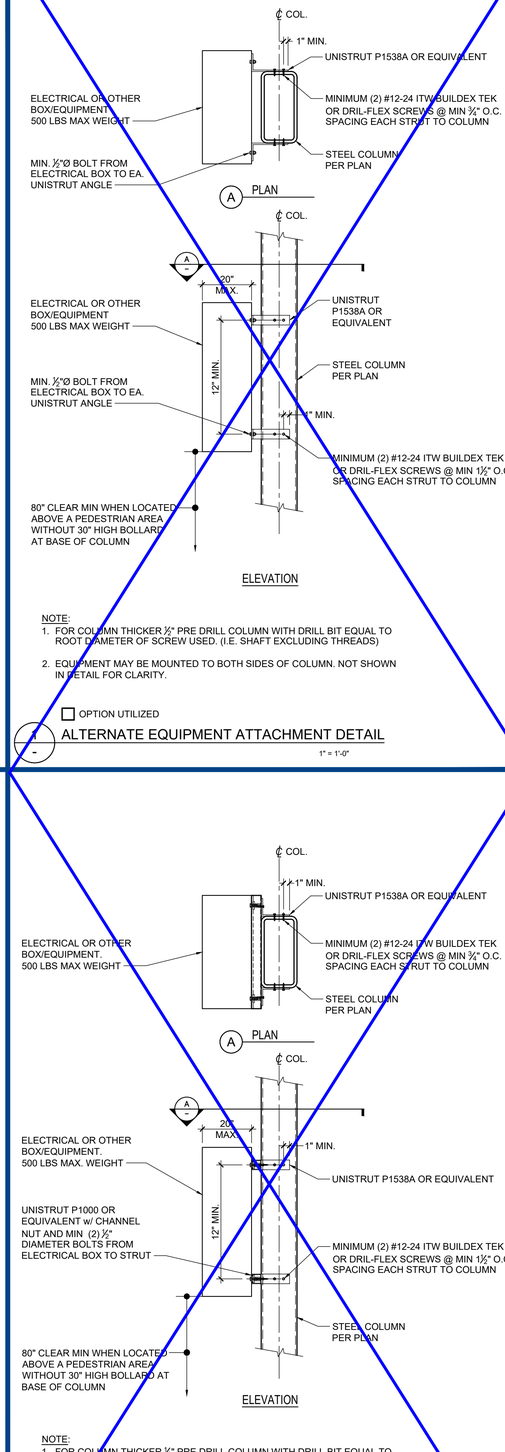

NOTE:
1. FOR COLUMN THICKER ½" PRE DRILL COLUMN WITH DRILL BIT EQUAL TO ROOT DIAMETER OF SCREW USED. (I.E. SHAFT EXCLUDING THREADS)
2. EQUIPMENT MAY BE MOUNTED TO BOTH SIDES OF COLUMN. NOT SHOWN IN DETAIL FOR CLARITY.

OPTION UTILIZED

1 ALTERNATE EQUIPMENT ATTACHMENT DETAIL

1" = 1'-0"

8 EV CHARGER FOUNDATION

3/4"=1'-0"

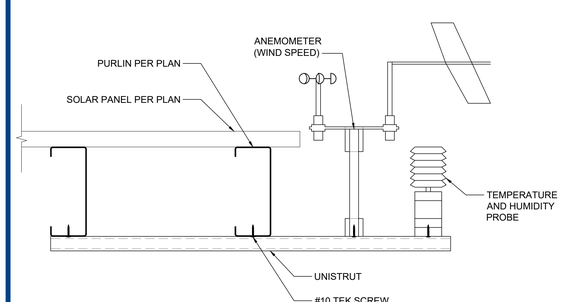

6 WEATHER STATION ATTACHMENT DETAIL

N.T.S.

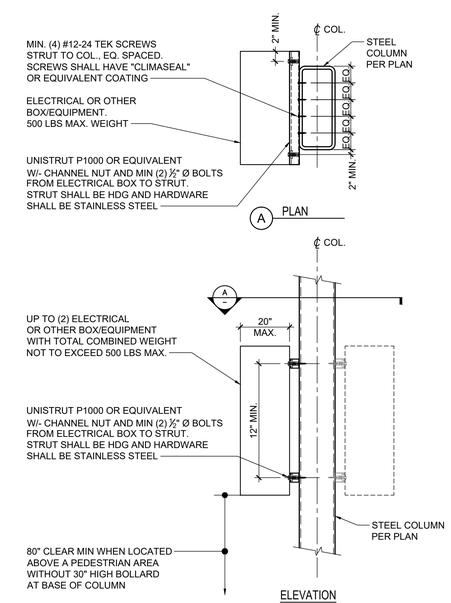

NOTE:
1. FOR COLUMN THICKER ½" PRE DRILL COLUMN WITH DRILL BIT EQUAL TO ROOT DIAMETER OF SCREW USED. (I.E. SHAFT EXCLUDING THREADS)
2. EQUIPMENT MAY BE MOUNTED TO BOTH SIDES OF COLUMN. NOT SHOWN IN DETAIL FOR CLARITY.

OPTION UTILIZED

4 TYP. ELECTRICAL EQUIPMENT TO COLUMN

1"=1'-0"

NOTE:
1. FOR COLUMN THICKER ½" PRE DRILL COLUMN WITH DRILL BIT EQUAL TO ROOT DIAMETER OF SCREW USED. (I.E. SHAFT EXCLUDING THREADS).
2. EQUIPMENT MAY BE MOUNTED TO BOTH SIDES OF COLUMN. NOT SHOWN FOR CLARITY

OPTION UTILIZED

2 ALTERNATE EQUIPMENT ATTACHMENT DETAIL

1" = 1'-0"

IDENTIFICATION STAMP
DIV. OF THE STATE ARCHITECT
APP: 03-125900 INC:
REVIEWED FOR
SS ☑ FLS ☑ ACS ☑
DATE: 03/18/2026

4 STEEL ENGINEERING
26030 ACERO
MISSION VIEJO, CA 92691
949.305.1150 | FAX 949.305.1420

M BAR C CONSTRUCTION INC.
1770 LA COSTA MEADOWS DRIVE
SAN MARCOS, CA 92078
EMK KRIVOKOPICH
PHONE: (760) 744-4131
FAX: (760) 744-4449
EMK@MBARCCONLINE.COM
LIC # 869960
B AND C-51
(770) 787-8845

ENGINEER'S APPROVAL

REGISTERED PROFESSIONAL ENGINEER
DUSTIN K. ROSENTHAL
S 5885
Exp. 12-31-26
STATE OF CALIFORNIA

BID INFORMATION

THE STRUCTURES AND DESIGNS IN THIS PC ARE PROPRIETARY TO M BAR C CONSTRUCTION, INC. AND 4 S.T.E.L. ENGINEERING, INC. ALL SITES USING THIS PC: M BAR C CONSTRUCTION, INC. SHALL BE THE STEEL CONTRACTOR & 4 S.T.E.L. ENGINEERING, INC. SHALL BE THE SEOR. SEE THE STANDARD NOTES FOR PC USE ON S-1 FOR ADDITIONAL REQUIREMENTS.

PRE-CHECK (PC) DOCUMENT

CODE: 2022 CBC

A SEPARATE PROJECT APPLICATION FOR CONSTRUCTION IS REQUIRED

APPROVED
DIV. OF THE STATE ARCHITECT
APP: 04-123955 PC
REVIEWED FOR
SS ☑ FLS ☑ ACS ☑ CG ☐
DATE: 10/14/2024

SITE SPECIFIC INFORMATION

ALTADENA ELEMENTARY SCHOOL
743 E CALAVERAS ST.
ALTADENA, CA 91001

REVISIONS

MARK	DATE	DESCRIPTION

4 STEL JOB #	MC02-V3-6
DATE	10-03-24
DRAWN BY	GM
CHECKED	RWS

UG 22.6.1

EQUIPMENT COLUMN CONNECTIONS

S-20

NOTE: IF DWG. IS NOT 24 x 36, IT IS NOT FULL SIZE

DRAWINGS, SPECIFICATIONS AND OTHER DOCUMENTS, PREPARED BY THE DESIGN PROFESSIONAL (DP) AND THE DP'S CONSULTANTS ARE INSTRUMENTS OF SERVICE FOR USE SOLELY WITH RESPECT TO THIS PROJECT. THIS INCLUDES DOCUMENTS IN ELECTRONIC FORM. THE DP AND THE DP'S CONSULTANTS SHALL BE DEEMED THE AUTHORS AND OWNERS OF THEIR RESPECTIVE INSTRUMENTS OF SERVICE AND SHALL RETAIN ALL COMMON LAW, STATUTORY AND OTHER RESERVED RIGHTS, INCLUDING COPYRIGHTS. THE INSTRUMENTS OF SERVICE SHALL NOT BE USED BY THE OWNER FOR FUTURE ADDITIONS OR ALTERATIONS TO THIS PROJECT OR FOR OTHER PROJECTS, WITHOUT THE PRIOR WRITTEN AGREEMENT OF THE DP. ANY UNAUTHORIZED USE OF THE INSTRUMENTS OF SERVICE SHALL BE AT THE OWNER'S SOLE RISK AND WITHOUT LIABILITY TO THE DP AND THE DP'S CONSULTANTS.

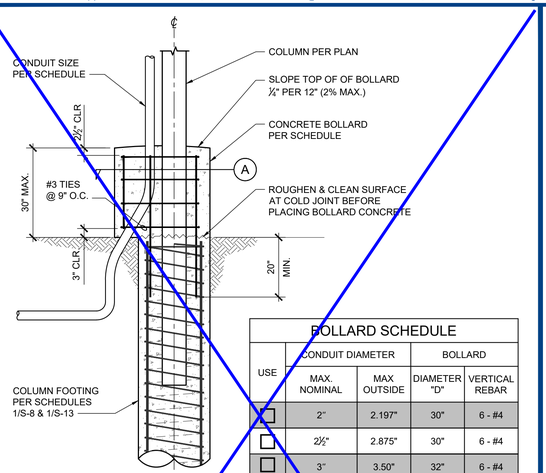

BOLLARD SCHEDULE				
USE	CONDUIT DIAMETER		BOLLARD	
	MAX. NOMINAL	MAX OUTSIDE	DIAMETER "D"	VERTICAL REBAR
☐	2"	2.197"	30"	6 - #4
☐	2½"	2.875"	30"	6 - #4
☐	3"	3.50"	32"	6 - #4
☐	3½"	4.0"	32"	6 - #4
☐	4"	4.5"	32"	6 - #4

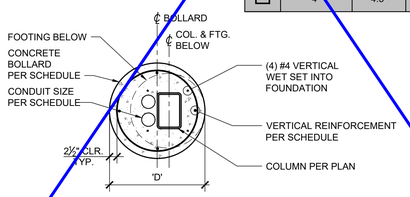

A SECTION

☐ OPTION UTILIZED

1 - OPTIONAL BOLLARD DETAIL W/ SINGLE SIDED CONDUIT 1/2"=1'-0"

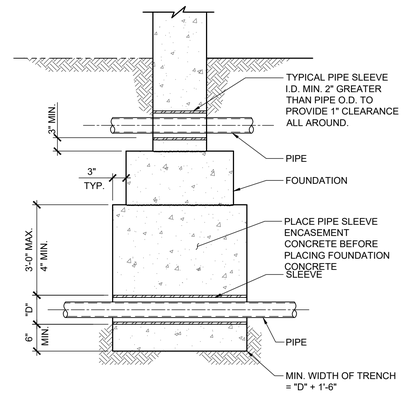

A PIPES PERPENDICULAR TO FOUNDATIONS

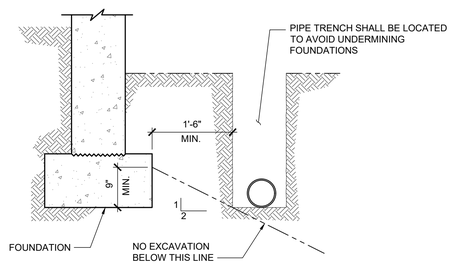

B PIPE TRENCH PARALLEL TO FOUNDATIONS

5 - TYPICAL UTILITY PIPES AND TRENCHES AT FOUNDATIONS N.T.S.

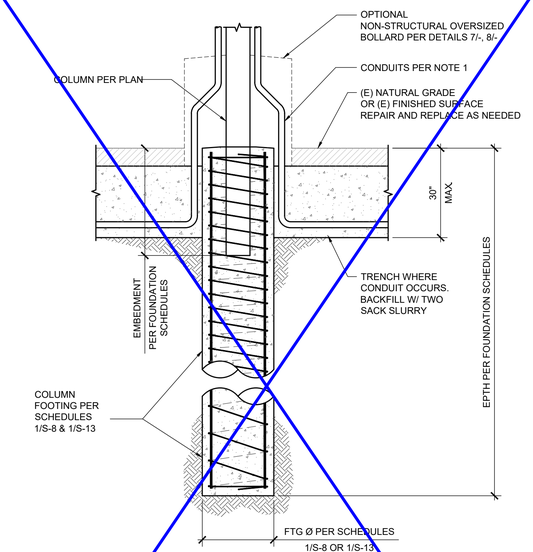

NOTES:

1. UNLIMITED NUMBER OF CONDUITS ALLOWED.

☐ OPTION UTILIZED

3 - CONDUIT OUTSIDE FOOTING 1/2"=1'-0"

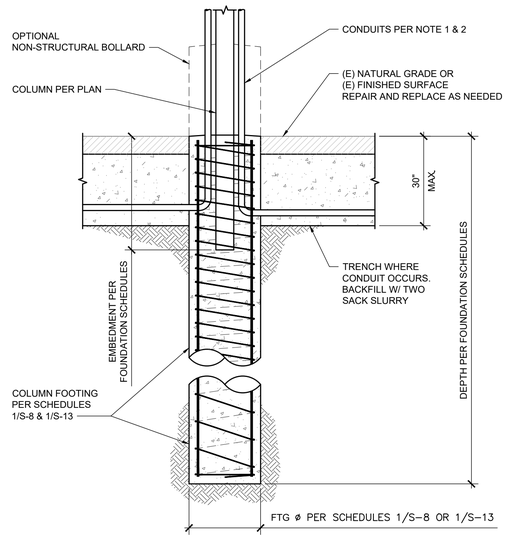

NOTES:

1. (2) 1" OR (1) 2" OR COMBINATION NOT TO EXCEED MAX 2" SIZE NOMINAL CONDUIT. CONDUITS MAY OCCUR ON ONE OR BOTH SIDES OF COLUMN.
2. CONTRACTOR TO SUBMIT CONDUIT LAYOUT TO ENGINEER FOR APPROVAL PRIOR TO INSTALLATION.

1 - CONDUITS IN STANDARD FOOTING 1/2"=1'-0"

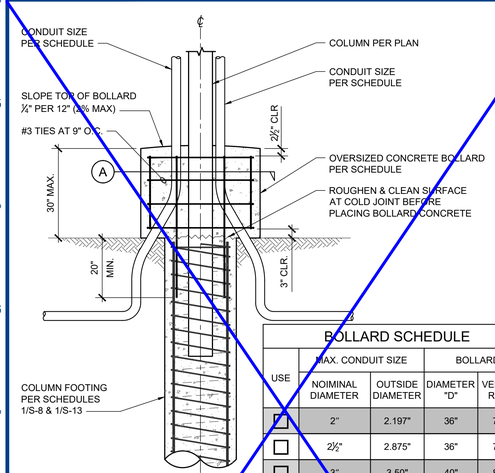

BOLLARD SCHEDULE				
USE	MAX. CONDUIT SIZE		BOLLARD	
	NOIMINAL DIAMETER	OUTSIDE DIAMETER	DIAMETER "D"	VERTICAL REBAR
☐	2"	2.197"	36"	7 - #4
☐	2½"	2.875"	36"	7 - #4
☐	3"	3.50"	40"	8 - #4
☐	3½"	4.0"	40"	8 - #4
☐	4"	4.5"	40"	8 - #4

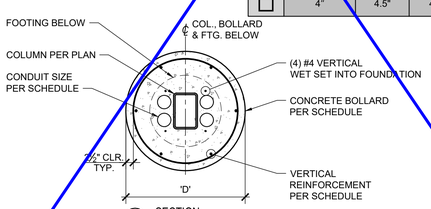

A SECTION

☐ OPTION UTILIZED

8 - OPTIONAL BOLLARD DETAIL W/ DUAL SIDED CONDUIT 1/2"=1'-0"

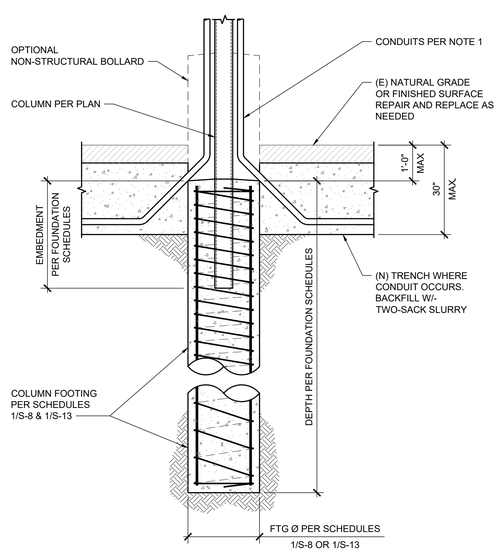

NOTES:

1. UNLIMITED NUMBER OF CONDUITS ALLOWED.

☒ OPTION UTILIZED

6 - ALTERNATIVE DEEPENED FOOTING 1/2"=1'-0"

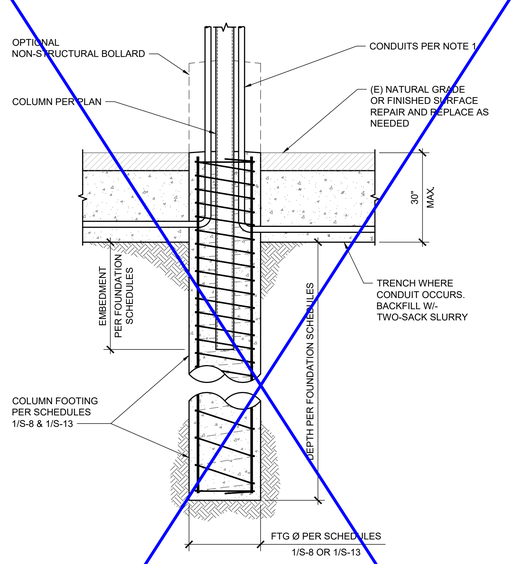

NOTES:

1. UNLIMITED NUMBER OF CONDUITS ALLOWED IN FOUNDATIONS.

☐ OPTION UTILIZED

2 - DEEPENED FOOTING 1/2"=1'-0"

IDENTIFICATION STAMP
DIV. OF THE STATE ARCHITECT
APP: 03-125900 INC:
REVIEWED FOR
SS ☑ FLS ☑ ACS ☑
DATE: 03/18/2026

4 STEEL ENGINEERING
26030 ACERO
MISSION VIEJO, CA 92691
949.305.1150 | FAX 949.305.1420

M BAR C CONSTRUCTION INC.
1770 LA COSTA MEADOWS DRIVE
SAN MARCOS, CA 92078
ERIK KRIVOKOPICH
PHONE: (760) 744-4131
FAX: (760) 744-4449
ERIK@MBARCONLINE.COM
LIC # B/PP60 B AND C51
(770) 787-8845

ENGINEER'S APPROVAL

REGISTERED PROFESSIONAL ENGINEER DUSTIN K. ROSENTHAL S 5885 CIVIL STATE OF CALIFORNIA

BID INFORMATION

THE STRUCTURES AND DESIGNS IN THIS PC ARE PROPRIETARY TO M BAR C CONSTRUCTION, INC. AND 4 S.T.E.L. ENGINEERING, INC. ALL SITES USING THIS PC: M BAR C CONSTRUCTION, INC. SHALL BE THE STEEL CONTRACTOR & 4 S.T.E.L. ENGINEERING, INC. SHALL BE THE SEOR. SEE THE STANDARD NOTES FOR PC USE ON S-1 FOR ADDITIONAL REQUIREMENTS.

PRE-CHECK (PC) DOCUMENT

CODE: 2022 CBC

A SEPARATE PROJECT APPLICATION FOR CONSTRUCTION IS REQUIRED

APPROVED
DIV. OF THE STATE ARCHITECT
APP: 04-123955 PC
REVIEWED FOR
SS ☑ FLS ☑ ACS ☑ CG ☐
DATE: 10/14/2024

SITE SPECIFIC INFORMATION

ALTADENA ELEMENTARY SCHOOL
743 E CALAVERAS ST.
ALTADENA, CA 91001

REVISIONS

MARK	DATE	DESCRIPTION

4 STEL JOB #	MC02-V3-6
DATE	10-03-24
DRAWN BY	GM
CHECKED	RWS

UG 22.6.1

FOUNDATION MISC.DETAILS

S-21

DRAWINGS, SPECIFICATIONS AND OTHER DOCUMENTS, PREPARED BY THE DESIGN PROFESSIONAL (DP) AND THE DP'S CONSULTANTS ARE INSTRUMENTS OF SERVICE FOR USE SOLELY WITH RESPECT TO THIS PROJECT. THIS INCLUDES DOCUMENTS IN ELECTRONIC FORM. THE DP AND THE DP'S CONSULTANTS SHALL BE DEEMED THE AUTHORS AND OWNERS OF THEIR RESPECTIVE INSTRUMENTS OF SERVICE AND SHALL RETAIN ALL COMMON LAW, STATUTORY AND OTHER RESERVED RIGHTS, INCLUDING COPYRIGHTS. THE INSTRUMENTS OF SERVICE SHALL NOT BE USED BY THE OWNER FOR FUTURE ADDITIONS OR ALTERATIONS TO THIS PROJECT OR FOR OTHER PROJECTS, WITHOUT THE PRIOR WRITTEN AGREEMENT OF THE DP. ANY UNAUTHORIZED USE OF THE INSTRUMENTS OF SERVICE SHALL BE AT THE OWNER'S SOLE RISK AND WITHOUT LIABILITY TO THE DP AND THE DP'S CONSULTANTS.

NOTE: IF DWG. IS NOT 24 x 36, IT IS NOT FULL SIZE